图1/Fig1.　　发动机及安装/ENGINE MOUNT

FD18T-C4WE3

FD25T-C4WE3

FD35T-C4WE3

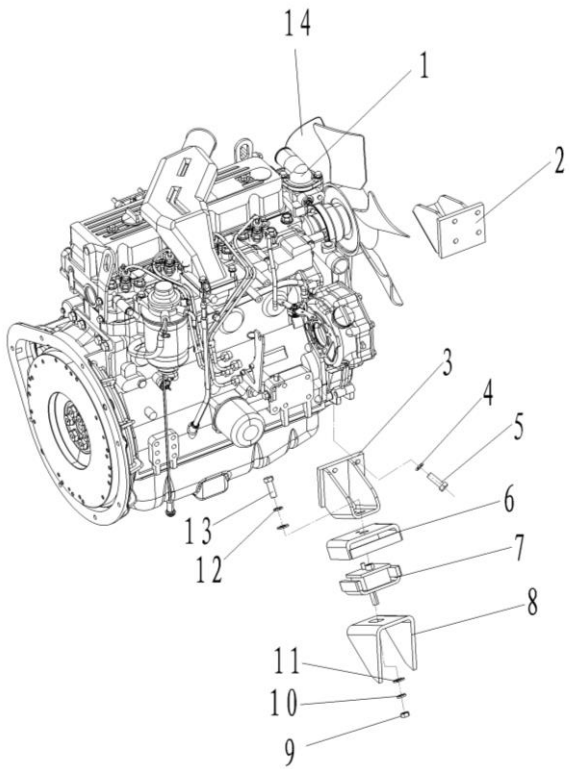

序号	物料ID	代号	名称	数量	备注
Item No.		Part No.	Description	Q'ty	Remark
A	N/A	N/A	Engine mount	1	
01	69007883	M30416Y01000-B	4TNE98 engine	1	
02	69034308	A30416-04000	Engine bracket	1	
03	69034307	A30416-03000	Engine bracket	1	
04	69000053	GB/T93-10	Washer 10	8	
05	69000128	GB/T5783-M10*30-8.8J	Bolt M10×30	8	
06		A30413-02000A	Engine bracket	2	
07		A30413-01000A	Engine bracket	2	
08	69036525	A30461-00007	Engine base	2	
09		GB/T6185.2-M12*1.25	Nut M12×1.25	2	
10	69024359	GB/T7244-M12	Washer 12	2	
11	69034253	A30413-00001	Washer	4	
12	69000054	GB/T93-12	Washer 12	2	
13	69000138	GB/T5786-M12*1.25*35-8.8J	Bolt M12×1.25×35	2	
14	69069925	35BJ16-04000	Fan	1	

图2/Fig2. 发动机及安装/ENGINE MOUNT

FD18T-C4WV3 FD18T-C4W(6)3

FD25T-C4WV3 FD25T-C4W(6)3

FD35T-C4WV3 FD35T-C4W(6)3

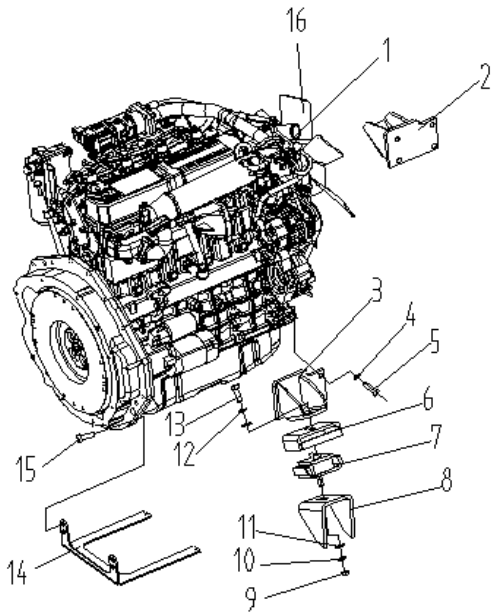

序号		代号	名称	数量	备注
Item No.		Part No.	Descripition	Q'ty	Remark
A	N/A	N/A	Engine mount	1	
01	69133434	M30416LS-01000-B1	S4S-455 engine	1	S4S-455
-	69089767	25BY16LF-01000	D04EG engine	1	D04EG
02	69042682	A30416LL-02000	Engine bracket	1	
03	69042681	A30416LL-01000	Engine bracket	1	
04	69000053	GB/T93-10	Washer 10	8	
05	69000128	GB/T5783-M10*30-8.8J	Bolt M10×30	8	
06		A30413-02000A	Engine bracket	2	
07		A30413-01000A	Engine bracket	2	
08	69036525	A30461-00007	Engine base	2	
09		GB/T6185.2-M12*1.25	Nut M12×1.25	2	
10	69024359	GB/T7244-M12	Washer 12	2	
11	69034253	A30413-00001	Washer	4	
12	69000054	GB/T93-12	Washer 12	2	
13	69000138	GB/T5786-M12*1.25*35-8.8J	Bolt M12×1.25×35	2	
14	69062726	M30416LS-00001	Bracket	1	
15	69024917	GB/T5786-M10*1.25*45-8.8J	Bolt M10×1.25×45	2	
16	69087920	25BY16LS-02000	Fan	1	3.5t S4S

图3/Fig3. 空滤器及安装/AIR CLEANER ASS'Y MOUNT

FD18T-C4WE3 FD18T-C4WV3 FD18T-C4W(6)3
FD25T-C4WE3 FD25T-C4WV3 FD25T-C4W(6)3
FD35T-C4WE3 FD35T-C4WV3 FD35T-C4W(6)3

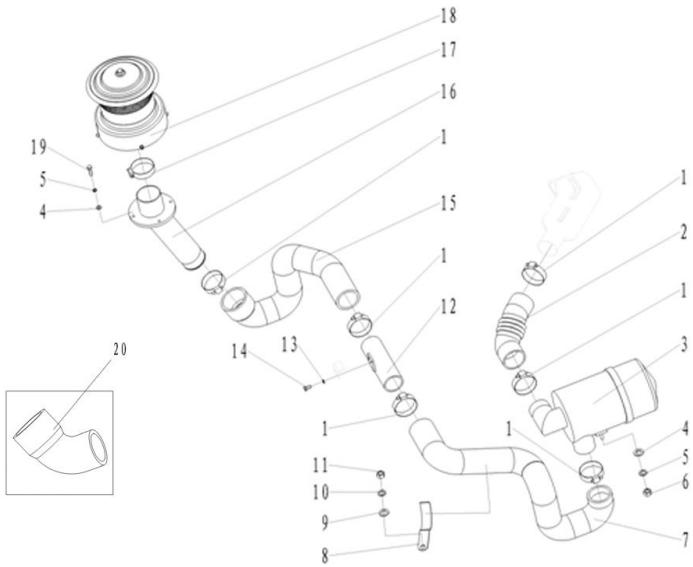

序号		代号	名称	数量	备注
Item No.		Part No.	Descripition	Q'ty	Remark
A	N/A	N/A	Air cleaner ass'y mount	1	
01	69036888	JB/T8870-70-90	Hoop d70-90	6	
02	69036125	A30412-00002	Air cleaner hose(outlet)	1	4TNE98
-	69076470	25BY12LS-00001	Air cleaner hose(outlet)	1	S4S
-	69138848	25BY12LF-00001A	Air cleaner hose(outlet)	1	D04EG
03	69001747	M3031201000	Air cleaner	1	
04	69000259	GB/T97.1-8	Washer 8	6	
05	69000062	GB/T93-8	Washer 8	6	
06	69000112	GB/T6170-M8-8J	Nut M8	2	
07	69087510	35B12-04000	Air cleaner hose(intlet)	1	
08	N/A	35B12-00002	Bracket	1	取消2020.1.15
09	69000252	GB/T97.1-14	Washer 14	1	取消2020.1.15
10	69005111	GB/T93-14	Washer 14	1	取消2020.1.15
11	69000115	GB/T6170-M14-8J	Nut M14	1	取消2020.1.15
12	69071547	25BY12-01000	Pipe	1	4TNE98、1.8-2.5t S4S、1.8-3.5tD04EG
13	69000060	GB/T93-6	Washer 6	2	
14	69000192	GB/T5783-M6*20-8.8J	Bolt M6×20	2	
15	69071548	25BY12-00001	Air cleaner hose(intlet)	1	4TNE98, 取消2020.1.15
-	69145353	25BY12LS-00002A	Air cleaner hose(intlet)	1	4TNE98,S4S 使用2020.3.2
-	69076471	25BY12LS-00002	Air cleaner hose(intlet)	1	1.8-2.5t S4S、D04EG 取消2020.1.15
-	69079596	35BY12LS-00001	Air cleaner hose(intlet)	1	3.5t S4S, 取消2020.1.15
16	69041847	35B12-01000	Connecting pipe	1	4TNE98、3.5tS4S, 取消2020.1.15
-	69076472	25BY12LS-01000	Connecting pipe	1	使用2020.3.2
17	N/A	SAE J1508	Hoop	1	
18	69041848	35B12-03000	Air cleaner KA33-3	1	

图3/Fig3. 空滤器及安装/AIR CLEANER ASS'Y MOUNT

FD18T-C4WE3 FD18T-C4WV3 FD18T-C4W(6)3

FD25T-C4WE3 FD25T-C4WV3 FD25T-C4W(6)3

FD35T-C4WE3 FD35T-C4WV3 FD35T-C4W(6)3

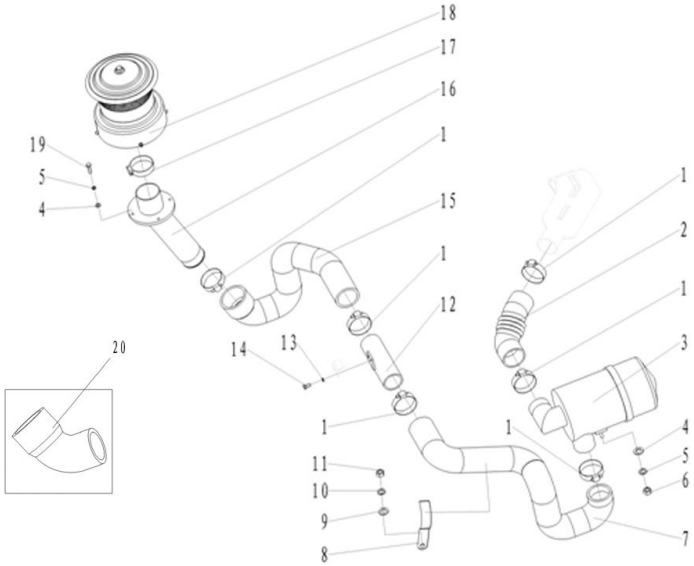

序号		代号	名称	数量	备注
Item No.		Part No.	Descripition	Q'ty	Remark
19	69000203	GB/T5783-M8*30-8.8J	Bolt M8×30	4	
20	69079597	35BY12LS-00002	Pipe	1	3.5t S4S

图4/Fig4. 散热器及安装/COOLING SYSTEM MOUNT

FD18T-C4WE3

FD25T-C4WE3

FD35T-C4WE3

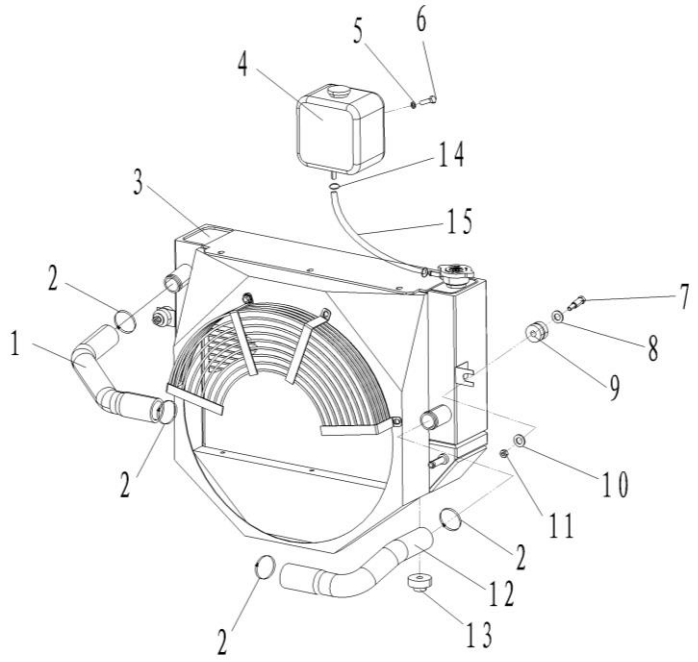

序号		代号	名称	数量	备注
Item No.		Part No.	Descripition	Q'ty	Remark
A	N/A	N/A	Cooling system	1	
01	69034301	A30421-00001	Upper hose	1	
02	69036889	JB/T8870-32-50	Hoop d32-50	4	
03	69086947	25BY21-01000A	Radiator ass'y	1	1.8-2.5T，取消2020.1.15
-	69145341	25BY21-01000B	Radiator ass'y	1	1.8-2.5T，使用2020.3.2
-	69086948	35BY21-01000A	Radiator ass'y	1	3.5T，取消2020.1.15
-	69135098	35BY21-01000B	Radiator ass'y	1	3.5T，使用2020.3.2
04	69001664	M30221N02000	Coolant recovery tank	1	
05	69000060	GB/T93-6	Washer 6	2	
06	69000190	GB/T5783-M6*16-8.8J	Bolt M6×16	2	
07	69000289	M3032100012	Radiator Bolt	2	
08	69000085	GB/T96.1-8	Washer 8	2	
09	69001849	M3032100010	Rubber danper B	2	
10	69000084	GB/T96.1-12	Washer 12	2	
11	69000292	GB/T889.1-M8-8J	Nut M8	2	
12	69071559	25BY21-00001	Lower hose	1	
13	69001850	M3032100009	Rubber danper A	2	
14	69000052	JB/T8870-10-16	Hoop d10-16	2	
15	69106535	A30421-00003	Rubber pipe Φ8×2-600	1	用69018200剪

图5/Fig5. 散热器及安装/COOLING SYSTEM MOUNT

FD18T-C4WV3 FD18T-C4W(6)3

FD25T-C4WV3 FD25T-C4W(6)3

FD35T-C4WV3 FD35T-C4W(6)3

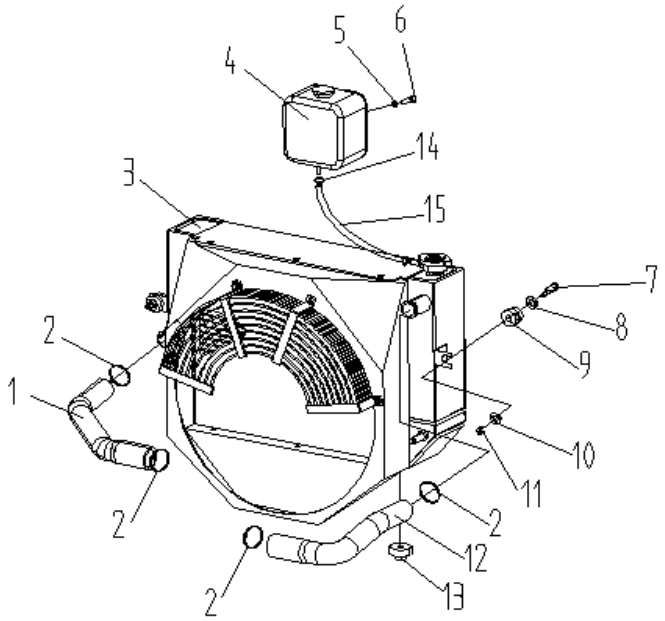

序号		代号	名称	数量	备注
Item No.		Part No.	Descripition	Q'ty	Remark
A	N/A	N/A	Cooling system	1	
01	69076476	25BY21LS-00001	Upper hose	1	
02	69036889	JB/T8870-32-50	Hoop d32-50	4	
03	69087508	25BY21LS-01000A	Radiator ass'y	1	1.8-2.5T S4S，取消2020.1.15
-		25BY21LS-01000B	Radiator ass'y	1	1.8-2.5T S4S，使用2020.2.25
-	69087509	35BY21LS-01000A	Radiator ass'y	1	3.5T S4S，取消20.1.15
-		35BY21LS-01000B	Radiator ass'y	1	3.5T S4S，使用2020.3.2
-	69089688	25BY21LF-01000	Radiator ass'y	1	2.5T D04EG
-	69089689	35BY21LF-01000	Radiator ass'y	1	3.5T D04EG
04	69001664	M30221N02000	Coolant recovery tank	1	
05	69000060	GB/T93-6	Washer 6	2	
06	69000190	GB/T5783-M6*16-8.8J	Bolt M6×16	2	
07	69000289	M3032100012	Radiator Bolt	2	
08	69000085	GB/T96.1-8	Washer 8	2	
09	69001849	M3032100010	Rubber danper B	2	
10	69000084	GB/T96.1-12	Washer 12	2	
11	69000292	GB/T889.1-M8-8J	Nut M8	2	
12	69059559	A30421LS-00001	Upper hose	1	
13	69001850	M3032100009	Rubber danper A	2	
14	69000052	JB/T8870-10-16	Hoop d10-16	2	
15	69106535	A30421-00003	Rubber pipe Φ8×2-600	1	用69018200剪

图6/Fig6.

FD18T-C4WE3

FD25T-C4WE3

FD35T-C4WE3

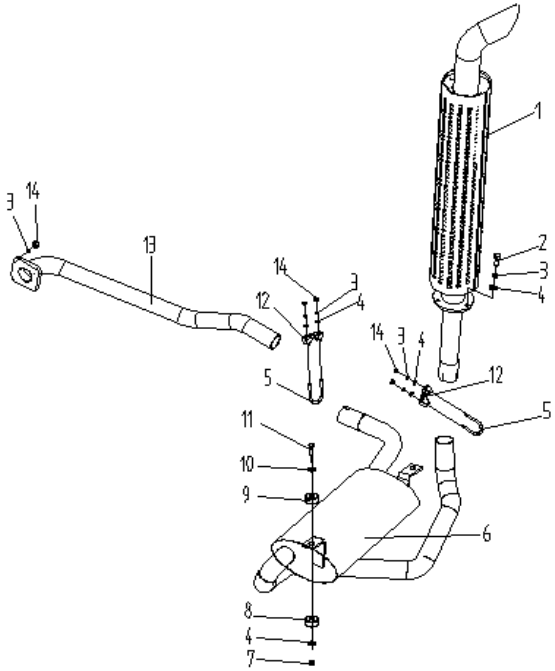

消音器及安装/MUFFLER ASS'Y MOUNT

序号		代号	名称	数量	备注
Item No.		Part No.	Descripition	Q'ty	Remark
A	N/A	N/A	Muffler Ass'y mount	1	
01	69089714	25B23-02000A	Vertical exhaust pipe	1	
02	69000200	GB/T5783-M8*25-8.8J	Bolt M8×25	3	
03	69000062	GB/T93-8	Washer 8	11	
04	69000259	GB/T97.1-8	Washer 8	9	
05	69015166	M3032300004	U-bolt	2	
06	69086946	25BY23-01000A	Muffler Ass'y	1	取消，2020.1.15
-	69145339	25BY23-01000B	Muffler Ass'y	1	使用，2020.3.2
07	69000292	GB/T889.1-M8-8J	Nut M8	2	
08	69015526	M3032300002-1	Rubber danper	2	
09	69065608	A30423-00002	Rubber danper	2	使用，2020.3.2
10	69000250	GB/T97.1-10	Washer 10	2	
11	69087428	M3032300001A	Muffler Bolt	2	
12	69015167	M3032300003	Stopper	2	
13	69071562	25BY23-02000	Exhaust pipe	1	1.8-2.5T
-	69071681	35BY23-01000	Exhaust pipe	1	3.5T
14	69000112	GB/T6170-M8-8J	Nut M8	8	

图7/Fig7.

FD18T-C4WV3

FD25T-C4WV3

FD35T-C4WV3

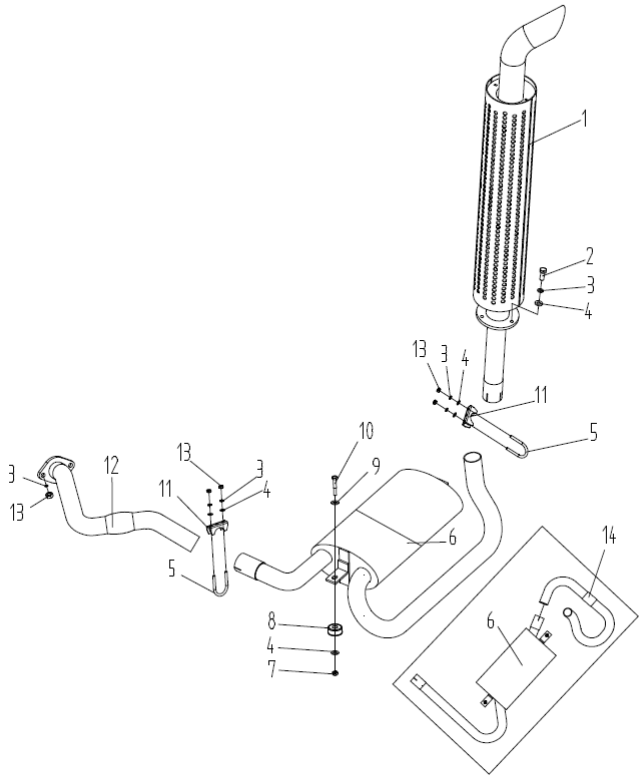

消音器及安装/MUFFLER ASS'Y MOUNT

序号		代号	名称	数量	备注
Item No.		Part No.	Descripition	Q'ty	Remark
A	N/A	N/A	Muffler Ass'y mount	1	
01	69089714	25B23-02000A	Vertical exhaust pipe	1	
02	69000200	GB/T5783-M8*25-8.8J	Bolt M8×25	3	
03	69000062	GB/T93-8	Washer 8	9	
04	69000259	GB/T97.1-8	Washer 8	9	
05	69015166	M3032300004	U-bolt	2	
06	69087507	25BY23LS-01000A	Muffler Ass'y	1	1.8-2.5T
-	69087721	35BY23LS-01000A	Muffler Ass'y	1	3.5T，取消2020.1.15
07	69000292	GB/T889.1-M8-8J	Nut M8	2	
08	69015526	M3032300002-1	Rubber danper	2	
09	69000250	GB/T97.1-10	Washer 10	2	
10	69087428	M3032300001A	Muffler Bolt	2	
11	69015167	M3032300003	Stopper	2	1.8-2.5T
-	69015167	M3032300003	Stopper	2	3.5T
12	69076481	25BY23LS-02000	Exhaust pipe	1	1.8-2.5T
—	69079606	35BY23LS-02000	Exhaust pipe	1	3.5T，取消2020.1.15
-	69145357	35BY23LS-02000A	Exhaust pipe	1	3.5T，使用2020.3.2
13	69000112	GB/T6170-M8-8J	Nut M8	6	1.8-2.5T
-	69000112	GB/T6170-M8-8J	Nut M8	6	3.5T
14	69087722	35BY23LS-03000	Exhaust pipe	1	3.5T，取消2020.1.15

图8/Fig8.

FD18T-C4W(6)3

FD25T-C4W(6)3

FD35T-C4W(6)3

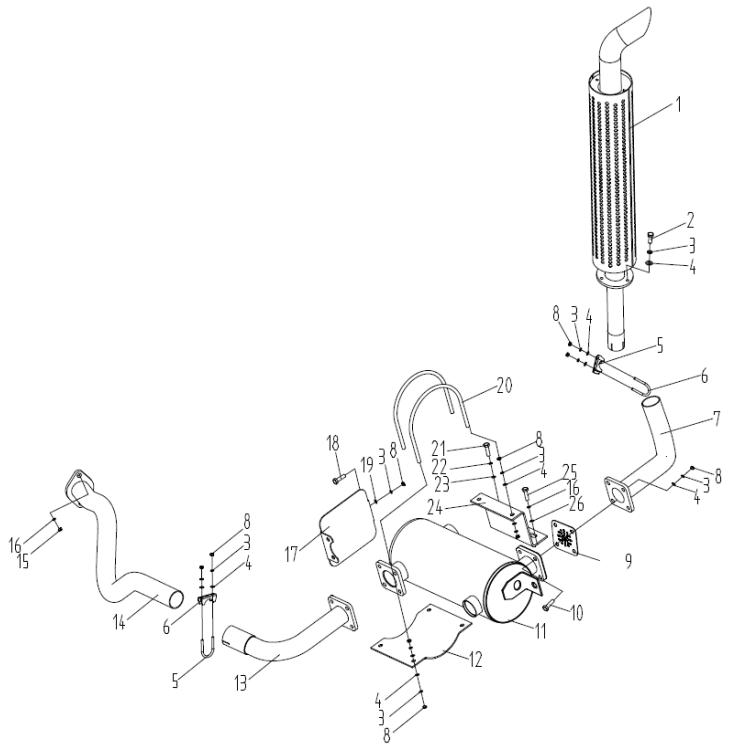

消音器及安装/MUFFLER ASS'Y MOUNT

序号		代号	名称	数量	备注
Item No.		Part No.	Descripition	Q'ty	Remark
A	N/A	N/A	Muffler Ass'y mount	1	
01	69089714	25B23-02000A	Vertical exhaust pipe	1	
02	69000200	GB/T5783-M8*25-8.8J	Bolt M8×25	3	
03	69000062	GB/T93-8	Washer 8	24	
04	69000259	GB/T97.1-8	Washer 8	23	
05	69015167	M3032300003	Stopper	2	
06	69015166	M3032300004	U-bolt	2	
07	69089760	25BY23LF-04000	Exhaust pipe	1	
08	69000112	GB/T6170-M8-8J	Nut M8	19	
09	69095408	25BY23LF-00002	Washer	1	
10	69000203	GB/T5783-M8*30-8.8J	Bolt M8×30	8	
11	N/A	25BY23LF-01000	DOC	1	发动机带
12	69103346	25BY23LF-00003-Black	Plate	1	
13	69089759	25BY23LF-03000	Exhaust pipe	1	取消，2020.1.15
-	69138849	25BY23LF-03000A	Exhaust pipe	1	使用，2020.3.2
14	69089758	25BY23LF-02000	Exhaust pipe	1	取消，2020.1.15
-	69145359	25BY23LF-02000A	Exhaust pipe	1	使用，2020.3.2
-	69089690	35BY23LF-01000	Exhaust pipe	1	取消，2020.1.15
-	69145361	35BY23LF-01000A	Exhaust pipe	1	使用，2020.3.2
15	69000103	GB/T6170-M10-8J	Nut M10	2	
16	69000053	GB/T93-10	Washer 10	2	
17	69095825	25BY23LF-05000	Baffle	1	
18	69000309	GB/T5783-M8*16-8.8J	Bolt M8×16	1	
19	69000085	GB/T96.1-8	Washer 8	1	
20	69092834	25BY23LF-00001	U-bolt	2	

图8/Fig8.

FD18T-C4W(6)3

FD25T-C4W(6)3

FD35T-C4W(6)3

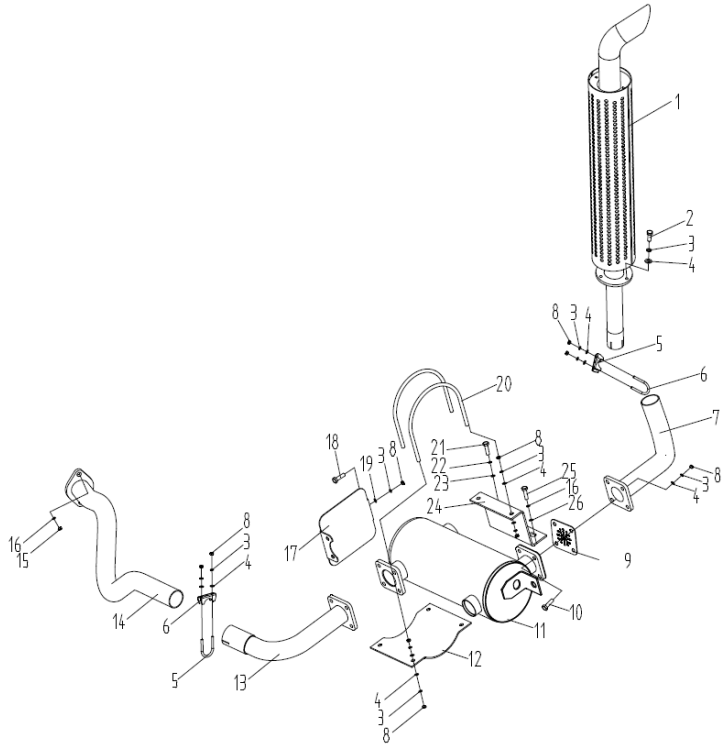

消音器及安装/MUFFLER ASS'Y MOUNT

序号		代号	名称	数量	备注
Item No.		Part No.	Descripition	Q'ty	Remark
A	N/A	N/A	Muffler Ass'y mount	1	
21	69008456	GB/T5786-M14*1.5*40	Bolt M14X1.5X40	1	取消，2020.1.15
22	69005111	GB/T93-14	Washer 14	1	取消，2020.1.15
23	69000252	GB/T97.1-14	Washer 14	1	取消，2020.1.15
24	69095412	35BY23LF-00001	Fixed plate	1	取消，2020.1.15
25	69000128	GB/T5783-M10*30-8.8J	Bolt M10×30	1	取消，2020.1.15
26	69000250	GB/T97.1-10	Washer 10	1	取消，2020.1.15

图9/Fig9.

燃油装置及安装/FUEL SYSTEM MOUNT

FD18T-C4WE3 FD18T-C4WV3 FD18T-C4W(6)3

FD25T-C4WE3 FD25T-C4WV3 FD25T-C4W(6)3

FD35T-C4WE3 FD35T-C4WV3 FD35T-C4W(6)3

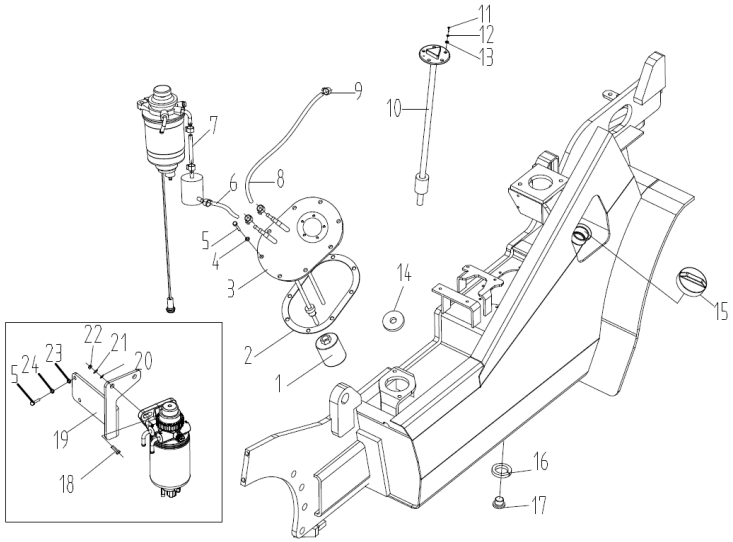

序号		代号	名称	数量	备注
Item No.		Part No.	Descripition	Q'ty	Remark
A	N/A	N/A	FUEL SYSTEM ASS'Y	1	
1	69006121	M3032202000	Fuel filter (Y0606)	1	
2	69000679	M3032200007	Gasket	1	
3	69041858	35B22-01000	Cover plate ass'y	1	
4	69000062	GB/T93-8	Washer 8	8	
5	69000198	GB/T5783-M8*20-8.8J	Bolt M8×20	9	
6	69105810	A30422-00003	Hose φ8×3-(380)	1	用69018200剪
7	69115018	A30422-00001	Hose φ8×3-(130)	1	YANMAR98、S4S 用69018200剪
-	69115017	A30422-00002	Hose φ8×3-(480)	1	D04EG 用69018200剪
8	69115017	A30422-00002	Hose φ8×3-(480)	1	用69018200剪
9	69000052	JB/T8870-10-16	Hose clamp d10-16	6	
10	69011885	M3032204000	Fuel quantity sensor(TBRG4111)	1	
11	69007977	GB/T818-M5*12-4.8J	Screw M5×12	5	
12	69000059	GB/T93-5	Washer 5	5	
13	69000257	GB/T97.1-5	Washer 5	5	
14	69035702	M3032200003	Magnet φ50×8	1	
15	69001925	M3032200001	Oiling cap	1	
16	69000357	JB/T982-20	Washer 20	1	
17	69003910	M3032200002	Drain plug	1	
18	69000128	GB/T5783-M10*30-8.8J	Bolt M10×30	2	D04EG
19	69103345	25BY22LF-00001-Black	Bracket	1	D04EG
20	69000250	GB/T97.1-10	Washer 10	2	D04EG
21	69000053	GB/T93-10	Washer 10	2	D04EG
22	69000103	GB/T6170-M10-8J	Nut M10	2	D04EG
23	69000259	GB/T97.1-8	Washer 8	2	D04EG

图9/Fig9.

燃油装置及安装/FUEL SYSTEM MOUNT

FD18T-C4WE3 FD18T-C4WV3 FD18T-C4W(6)3

FD25T-C4WE3 FD25T-C4WV3 FD25T-C4W(6)3

FD35T-C4WE3 FD35T-C4WV3 FD35T-C4W(6)3

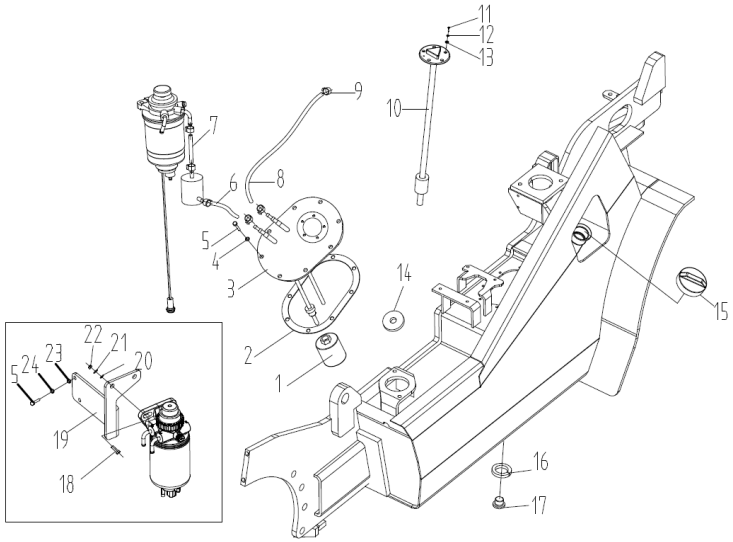

序号		代号	名称	数量	备注
Item No.		Part No.	Descripition	Q'ty	Remark
24	69000062	GB/T93-8	Washer 8	2	D04EG

图10/Fig10.

FD18T-C4WE3 FD18T-C4WV3

FD25T-C4WE3 FD25T-C4WV3

FD35T-C4WE3 FD35T-C4WV3

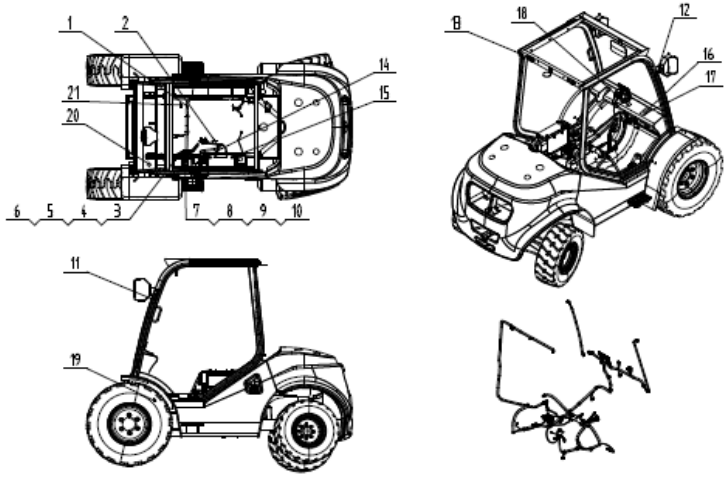

电气系统 / ELECTRICAL SYSTEM

序号	物料ID	代号	名称	数量	备注
Item No.		Part No.	Descripition	Q'ty	Remark
01	69095046	25BY24-01100A	The main wire harness	1	4TNE98
-	69095045	25BY24LS-01100A	The main wire harness	1	S4S
02		A30424-01101	Fusible line 50A	1	4TNE98
-	69045336	30424L-01001	Fusible line 90A	1	S4S
03	69041292	U3042401500	Grounding wire	1	
04	69000189	GB/T5783-M6*12-8.8J	Bolt M6×12	1	
05	69000258	GB/T97.1-6	Washer 6	1	
06	69000060	GB/T93-6	Washer 6	1	
07	69071565	25BY24-04100	Reversing control box DH180E	1	
08	69052475	GB/T5783-M5*12	Bolt M5×12	1	
09	69000257	GB/T97.1-5	Washer 5	1	
10	69000059	GB/T93-5	Washer 5	1	
11	69019048	30324-03000	wire harness	1	
12	69021907	30324-04000	wire harness	1	
13	69036775	A30424-01500	wire harness	1	
14	69065973	A30424-01600A	Positive line	1	4TNE98
-	69065974	A30424LL-01600A	Positive line	1	S4S
15	69065975	A30424-01700A	Negative line	1	
16	69076010	25BY24-02300	switch group bounding	1	
17	69085513	25BY24-02200A	Rocker switch group	1	
18	69077432	25BY24-02500	Four-wheel drive switch	1	
19	69073723	25BY24-00050	Speed sensor ZG417	1	
20	69076024	35BJ24-03101A	Four-drive alarm TS2-F9R	1	
21	69001847	U30424LS02002	Oil temperature sensor WG430	1	

图11/Fig11. 电气系统 / ELECTRICAL SYSTEM

FD18T-C4WE3 FD18T-C4WV3
FD25T-C4WE3 FD25T-C4WV3
FD35T-C4WE3 FD35T-C4WV3

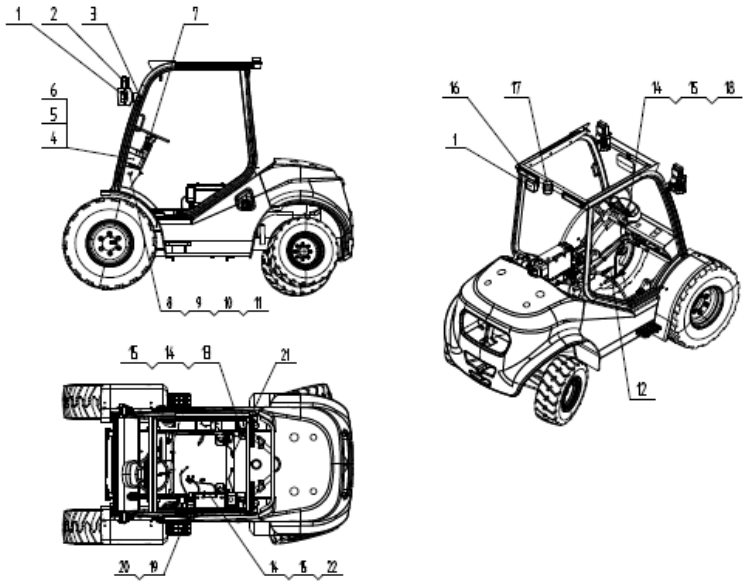

序号	物料ID	代号	名称	数量	备注
Item No.		Part No.	Descripition	Q'ty	Remark
01	69044061	A30424-02103	Head lightSM-912	3	
02	69044060	A30424-02104	Front combination lamp	2	
03	69008754	30324-00001	Rubber ring	2	
04	69066467	30424Y-54000	Combination display HZB909YMN-MKS	1	4TNE98
-	69065979	30324-55000	Combination display HZB909YN-MKS		S4S
05	69000083	GB/T96.1-6	Washer 6	4	
06	69000324	GB/T818-M6*35-4.8J	Bolt M6×35	4	
07	69021669	30424-00016	Combination switch	1	
08	69000384	A25724-02008	Hand brake switch	1	
09	69039802	GB/T823-M4*30-8.8J	Bolt M4×30	2	
10	69000256	GB/T97.1-4	Washer 4	2	
11	69000055	GB/T93-4	Washer 4	2	
12	69000497	A25724-02010	Brake switch	1	
13	69000379	A25724-02006	Buzzer	1	
14	69000309	GB/T5783-M8*16-8.8J	Bolt M8×16	2	
15	69000259	GB/T97.1-8	Washer 8	2	
16	69037956	A30424-02102	Combination light	2	
17	69009359	A25724-02004	Warning light	1	
18	69006074	A25724-02005	Horn	1	
19	69037965	A30424-09100	Electric box	1	
20	69006021	GB/T818-M6*25-4.8J	Bolt M6×25	4	
21	69001847	U30424LS02002	Water temperature sensor WG430	1	S4S
22	69071648	A30424-02500	Q.G.S controller	1	4TNE98
				1	

图12/Fig12.

FD18T-C4WE3	FD18T-C4WV3	FD25T-C4W(6)3
FD18T-C4WV3	FD25T-C4WE3	FD25T-C4WV3
FD18T-C4W(6)3	FD35T-C4WE3	FD35T-C4WV3

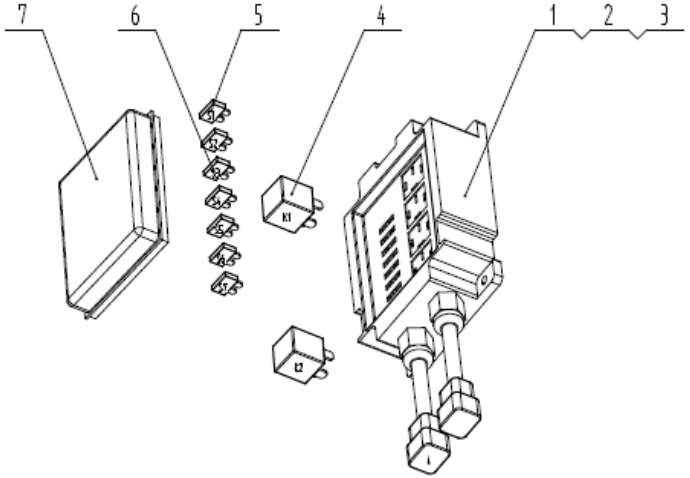

电气系统 / ELECTRICAL SYSTEM

序号	物料ID	代号	名称	数量	备注
Item No.		Part No.	Descripition	Q'ty	Remark
01	69037965	A30424-09100	Pedestal	1	
02	69000102	GB/T818-M6*12-4.8J	Bolt M6×12	4	
03	69000060	GB/T93-6	Washer 6	4	
04		A30424-09101	Relay	2	
05	69010415	22150020000	15A Fuse	4	
06	69000484	22150010000	10A Fuse	3	
07	N/A	A30424-09200	Cover	1	

图13/Fig13.

电气系统 / ELECTRICAL SYSTEM

FD18T-C4WE3	FD18T-C4WV3	FD25T-C4W(6)3
FD18T-C4WV3	FD25T-C4WE3	FD25T-C4WV3
FD18T-C4W(6)3	FD35T-C4WE3	FD35T-C4WV3

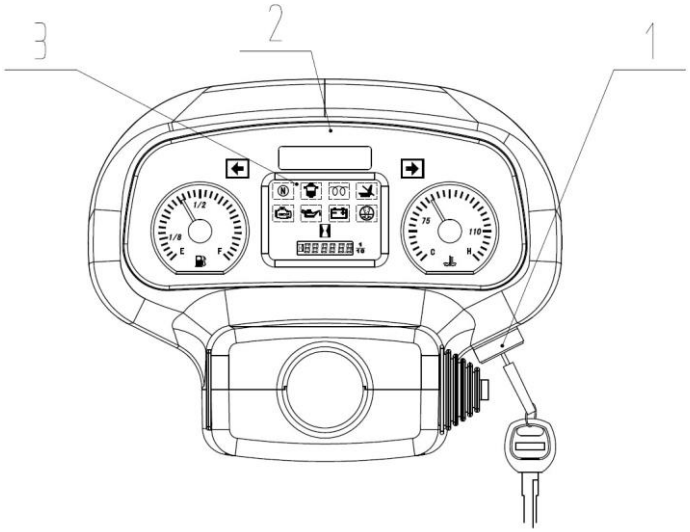

序号	物料ID	代号	名称	数量	备注
Item No.		Part No.	Description	Q'ty	Remark
A	69066467	30424Y-54000	Combination displayHZB909YMN-MKS	1	4TNE98
-	69065979	30324-55000	Combination display HZB909YN-MKS	1	S4S
-	69089793	25BY24LF-09000	Combination display HZB908SLCAN-MKS	1	D04EG
1	69004244	JK406c	Key switch	1	
2		30324-55200	Dashboard shell	1	
3		30324-55100	Dashboard core	1	

图14/Fig14.

FD18T-C4W(6)3　FD25T-C4W(6)3　FD35T-C4W(6)3

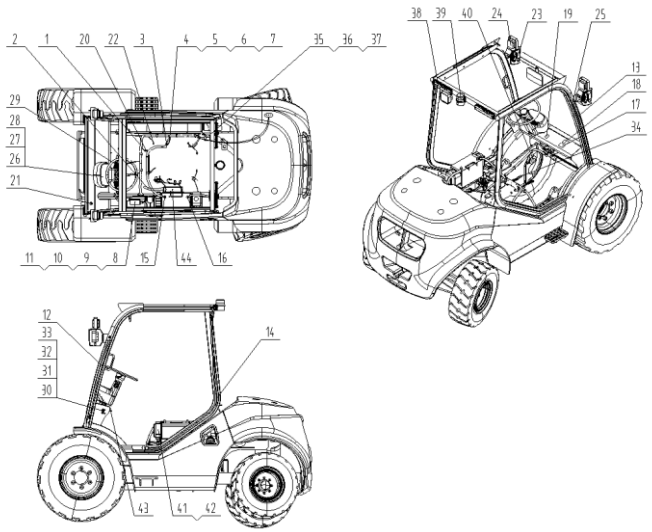

电气系统 / ELECTRICAL SYSTEM

序号	物料ID	代号	名称	数量	备注
Item No.		Part No.	Descripition	Q'ty	Remark
1	69089790	25BY24LF-01000	The main wire harness	1	
2	69089791	25BY24LF-01100	ECU wire harness	1	
3	69045336	30424L-01001	Fusible line 90A	1	
4	69041292	U3042401500	Grounding wire	1	
5	69000189	GB/T5783-M6*12-8.8J	Bolt M6×12	1	
6	69000258	GB/T97.1-6	Washer 6	1	
7	69000060	GB/T93-6	Washer 6	1	
8	69071565	25BY24-04100	Reversing control box	1	
9	69052475	GB/T5783-M5*12	Bolt M5×12	1	
10	69000257	GB/T97.1-5	Washer 5	1	
11	69000059	GB/T93-5	Washer 5	1	
12	69019048	30324-03000	wire harness	1	
13	69021907	30324-04000	wire harness	1	
14	69036775	A30424-01500	wire harness	1	
15	69023600	30324M-01106A	Positive line	1	
16	69023601	30324M-01107A	Negative line	1	
17	69076010	25BY24-02300	switch group bounding	1	
18	69085513	25BY24-02200A	Rocker switch group	1	
19	69076011	25BY24-02400	Four-wheel drive switch	1	
20	69073723	25BY24-00050	Speed sensor ZG417	1	
21	69076024	35BJ24-03101A	Four-drive alarm TS2-F9R	1	
22	69085012	30424-00036	Oil temperature sensor WG430	1	
23	69044061	A30424-02103	Head lightSM-912	3	
24	69044060	A30424-02104	Front combination lamp	2	
25	69008754	30324-00001	Rubber ring	2	

图14/Fig14. 电气系统 / ELECTRICAL SYSTEM

FD25T-C4W(6)3 FD35T-C4W(6)3

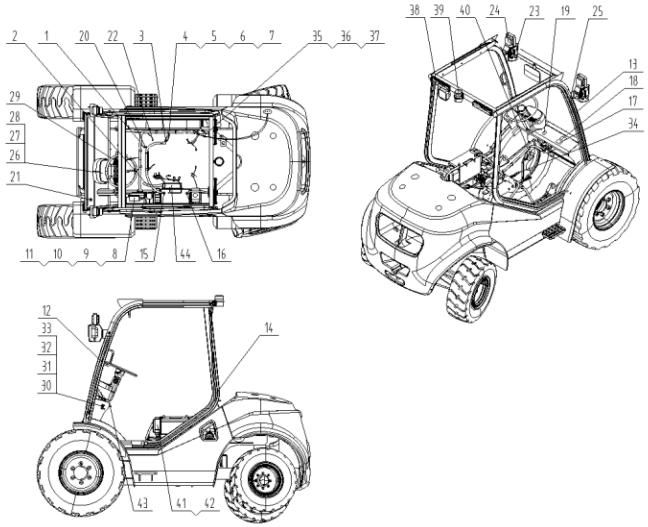

序号	物料ID	代号	名称	数量	备注
Item No.		Part No.	Descripition	Q'ty	Remark
26	69089792	25BY24LF-05000	Combination display	1	
27	69000083	GB/T96.1-6	Washer 6	4	
28	69000324	GB/T818-M6*35-4.8J	Bolt M6×35	4	
29	69000522	45424-00016	Combination switch	1	
30	69000384	A25724-02008	Hand brake switch	1	
31	69039802	GB/T823-M4*30-8.8J	Bolt M4×30	2	
32	69000256	GB/T97.1-4	Washer 4	2	
33	69000055	GB/T93-4	Washer 4	2	
34	69044167	A30424-02201	Brake switch	1	
35	69000379	A25724-02006	Buzzer	1	
36	69000309	GB/T5783-M8*16-8.8J	Bolt M8×16	2	
37	69000259	GB/T97.1-8	Washer 8	2	
38	69037956	A30424-02102	Combination light	2	
39	69009359	A25724-02004	Warning light	1	
40	69006074	A25724-02005	Horn	1	
41	69089793	25BY24LF-09000	Electric box	1	
42	69006021	GB/T818-M6*25-4.8J	Bolt M6×25	4	
43	69015137	30324-00024	lamp switch	1	
44		/	ECU	1	

图15/Fig15.

变速箱安装(电液式)/TRANSMISSION SYSTEM MOUNT

FD18T-C4WE3 FD18T-C4WV3 FD18T-C4W(6)3

FD25T-C4WE3 FD25T-C4WV3 FD25T-C4W(6)3

FD35T-C4WE3 FD35T-C4WV3 FD35T-C4W(6)3

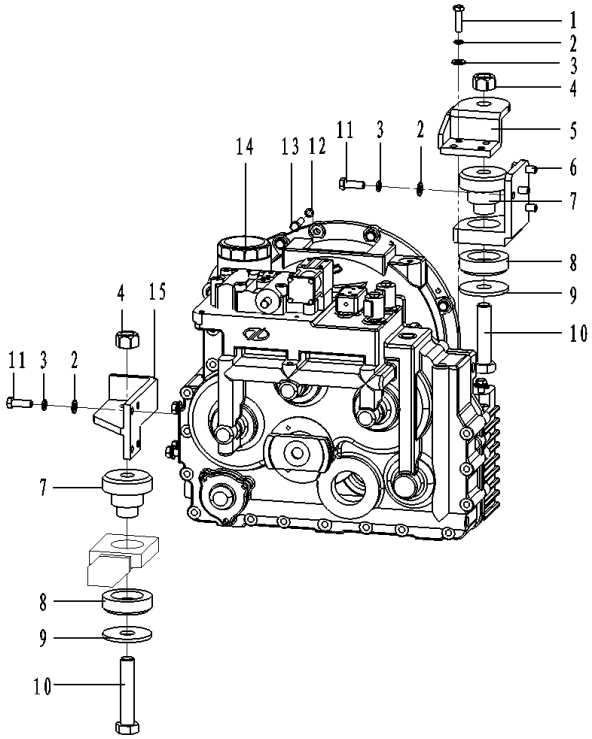

序号		代号	名称	数量	备注
Item No.		Part No.	Descripition	Q'ty	Remark
01	69000138	GB/T5786-M12*1.25*35-8.8J	Bolt M12×1.25×35	8	
02	69000054	GB/T93-12	Washer 12	12	
03	69000251	GB/T97.1-12	Washer 12	12	
04	69038449	GB/T6186-M24-10J	Nut M24	2	
05	69071554	25BY16-05000	BracketⅡ	1	
06	69071553	25BY16-04000	Bracket Ⅰ	1	
07		M45336-07001B	Bracket	2	
08		M45336-07002B	Bracket	2	
09	69087292	M45336-00001B-1	Washer	2	
10	69036694	GB/T5782-M24*150-12.9J	Bolt M24×150	2	
11	69000306	GB/T5783-M12*30-8.8J	Bolt M12×30	8	
12	69000062	GB/T93-8	Washer 8	8	
13	69000198	GB/T5783-M8*20-8.8J	Bolt M8×20	8	
14	69071552	25BY16-02000	Transmission case	1	FSDT35Ⅰ，洋马98
-	69076486	25BY16LS-01000	Transmission case	1	FSDT35Ⅰ-1，三菱
15	69071555	25BY16-06000	Bracket	1	

图16/Fig16. 变速箱箱体部分1/Tranminssion 1

FD18T-C4WE3 FD18T-C4WV3 FD18T-C4W(6)3

FD25T-C4WE3 FD25T-C4WV3 FD25T-C4W(6)3

FD35T-C4WE3 FD35T-C4WV3 FD35T-C4W(6)3

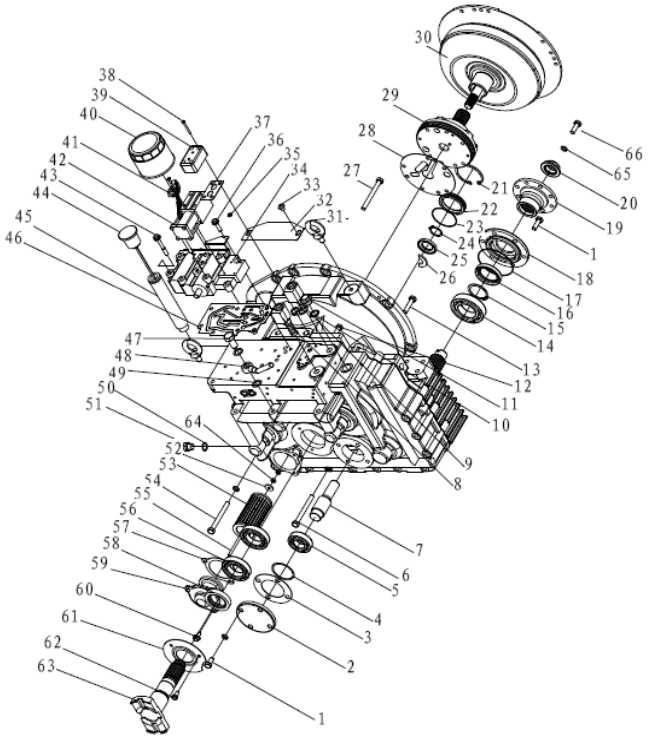

序号		代号	名称	数量	备注
Item No.		Part No.	Descripition	Q'ty	Remark
01	69000125	GB/T5783-M10*25-8.8J	Bolt M10×25	10	
02		FSDT35-01004	The Idler shaft end cover	1	
03	69140510	FSDT35-01015	The Idler shaft end cover gasket	1	
04		FSDT35-05009	Idler shaft gasket	AR	
05	69135132	6206 GB/T276-1994	Bearing 6206	1	
06		GB/T5782-M10*105	Bolt M10×105	6	
07		FSDT35-05004	Idler shaft	1	
08	69091830	SV08-33-V-12-DL	The decorative solenoid valve	1	
09	69091831	SV08-40-V-12-DL	The decorative solenoid valve	1	
10	69000357	JB/T982-20	Combined seal pad 20	1	
11		SDT30-01021	Oil filler plug	1	
12	69000128	GB/T5783-M10*30-8.8J	Bolt M10×30	1	
13	69000134	GB/T5783-M10*45-8.8J	Bolt M10×45	3	
14	69058028	GB/T276-6210	Bearing 6210	1	
15	69005096	GB/T894.1-Φ50	Clip spring 50	1	
16	69092040	JDS45-04012	Oil seal 50×70×10	1	
17	69136817	GB1235-76-100*3.1	O-ring 100×3.1	1	
18		FSDT35-01003	ke off the bridge shaft end cover	1	
19		FSDT35-06003	Off the bridge flange	1	4TNE98
-		FSDT35-06003-1	Off the bridge flange	1	S4S、D04EG
20		FSDT35-06004	Nut	1	4TNE98
-		FSDT35-06006	Separate plate	1	S4S、D04EG
21	69011357	GB/T893.1-Φ72	Clip spring 72	1	
22	69140512	FSDT35-01008	The oil seal end cover	1	
23	69009540	GB/T1235-70*3.1	O-ring70×3.1	1	

图16/Fig16. 变速箱箱体部分1/Tranminssion 1

FD18T-C4WE3 FD18T-C4WV3 FD18T-C4W(6)3

FD25T-C4WE3 FD25T-C4WV3 FD25T-C4W(6)3

FD35T-C4WE3 FD35T-C4WV3 FD35T-C4W(6)3

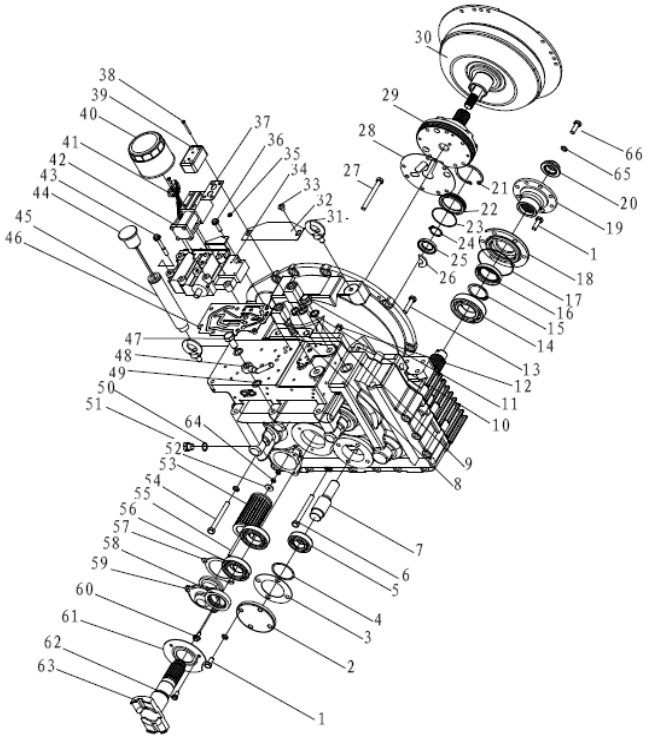

序号		代号	名称	数量	备注
Item No.		Part No.	Descripition	Q'ty	Remark
24	69000068	GB/T894.1-Φ30	Clip spring 30	1	
25		FSDT35-05007	The stopper ring	1	
26		FSDT35-05006	A retaning ring	2	
27	69007463	GB/T5782-M10*80-8.8J	Bolt M10×80	2	
28	69092039	SDT30-05003	Gasket	1	
29		SDT30-05000	Charging pump ass' y	1	
30	69100194	SDT30-06000-1	Tor-con hose ass' y	1	
31	69095736	GB/T825-M12	Screw M12	2	
32		SDT30-01024	Housing cover	1	
33	69135152	GB/T818-2000-M8*10	Screw M8×10	2	
34	69100196	SDT30-07200	The electtro-hydraulic control valve	1	
35		Y30H-07020	Filter	1	
36	69000203	GB/T5783-M8*30-8.8J	Bolt M8×30	2	
37	69129499	FSDT35-01014	Gasket	1	
38	69028279	GB/T70.1-M6*35-12.9J	Screw M6×35	4	
39		FSDT35-01005	Excessive block	1	
40	69101154	Y30H-07010	Transmission filter (II)	1	
41		Y30H-07002	Connector	1	
42	69129498	Y30H-D07300	Solenoid valve	1	
43		GB/T5789-M8*60	Bolt M8×60	4	
44	69100195	Y30H-01007A	Oiling cap	1	
45		FSDT35-01007-1	Dipstick seat	1	
46	69092038	SDT30-07015	Gasket	1	
47		SDT30-01018	Hinge bolt	2	
48		SDT30-01019	Hose	2	

图16/Fig16. 变速箱箱体部分1/Tranminssion 1

FD18T-C4WE3 FD18T-C4WV3 FD18T-C4W(6)3

FD25T-C4WE3 FD25T-C4WV3 FD25T-C4W(6)3

FD35T-C4WE3 FD35T-C4WV3 FD35T-C4W(6)3

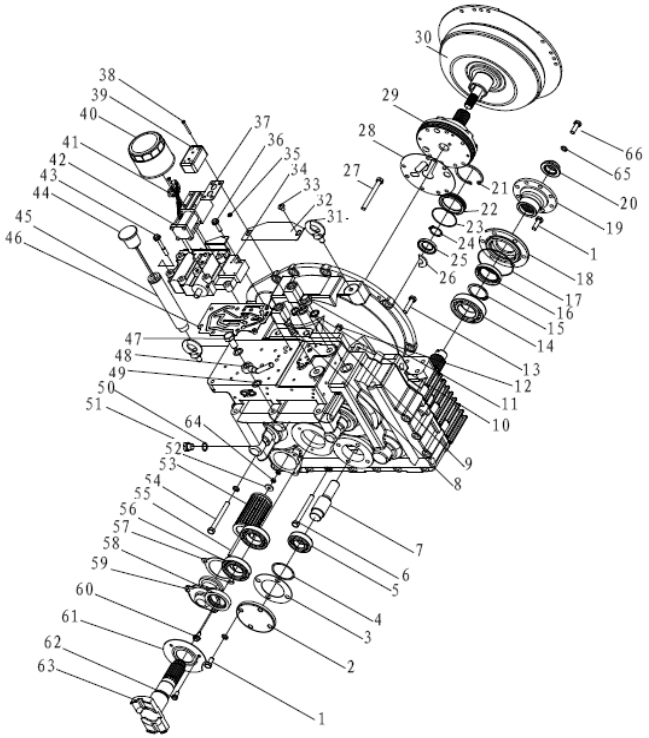

序号		代号	名称	数量	备注
Item No.		Part No.	Descripition	Q'ty	Remark
49		SDT30-01020	Bolt gasket	4	
50	69000355	JB/T982-16	Seal ring 16	2	
51		Y30H-01011	Plug	2	
52	69000060	GB/T93-6	Washer 6	1	
53	69100812	Y30H-01102	Filter	1	
54	69135088	GB/T5782-2000-M10*100	Bolt M10×100	9	
55		SDT30-01007	Bolt	1	
56	69136270	GB/T276-1994-03	Bearing 6009	2	
57	69140511	SDT30-01005	Gasket	1	
58	69140508	SDT30-03003	Oil seal 45×68×12	1	
59		SDT30-01004	Filter	1	
60	69000309	GB/T5783-M8*16-8.8J	Bolt M8×16	3	
61		FSDT35-01009	Dust-proof cap	1	
62	69000189	GB/T5783-M6*12-8.8J	Bolt M6×12	3	
63		FSDT35-05001	Output flange	1	
64	69000111	GB/T6170-M6-8J	Nut M6	2	
65	69005111	GB/T93-14	Washer 14	1	S4S、D04EG
66		FSDT35-06007	Bolt	1	S4S、D04EG

图17/Fig17. 变速箱箱体部分2/Tranminssion 2

FD18T-C4WE3 FD18T-C4WV3 FD18T-C4W(6)3

FD25T-C4WE3 FD25T-C4WV3 FD25T-C4W(6)3

FD35T-C4WE3 FD35T-C4WV3 FD35T-C4W(6)3

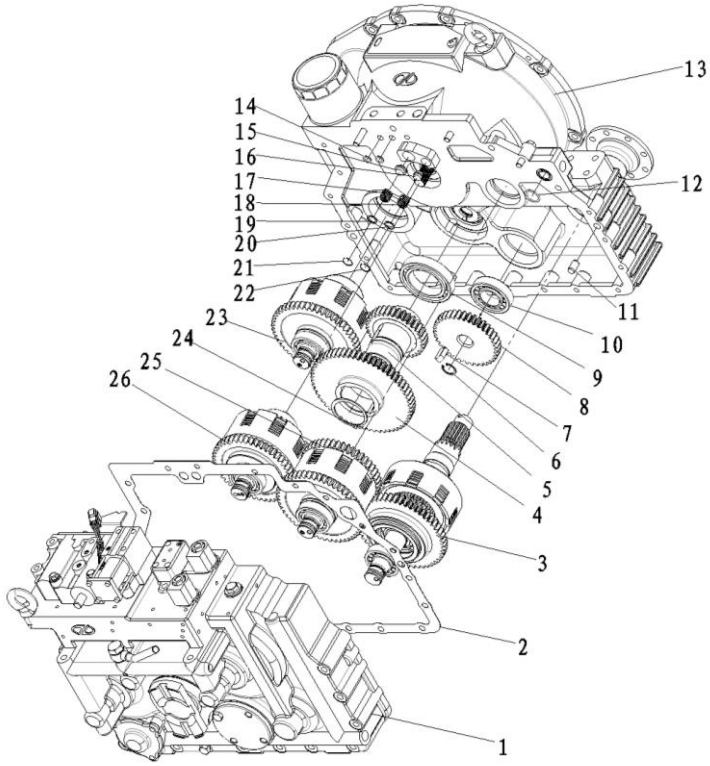

序号		代号	名称	数量	备注
Item No.		Part No.	Descripition	Q'ty	Remark
01		FSDT35-01001	Box	1	
02	69092034	FSDT35-01006	Tor-con case gasket	1	
03		FSDT35-06000	Clutch assembly	1	
04		FSDT35-05003	Output gear	1	
05		FSDT35-05002	Gear	1	
06	69135133	GB/T893.1-1986-24	Clip spring 24	1	
07		FSDT35-05008	Key C14×28×9	2	
08	69145707	FSDT35-05005	Idler shaft	1	
09	69138348	GB/T276-6012	Bearing 6012	1	
10		GB/T283-NF207	Bearing NF207	1	
11		GB/T119.1-12*m6*20	Pin 12×20	2	
12	69140514	GB1235-76-28*2.4	O-ring 28×2.4	1	
13		FSDT35-01002	Tor-con case	1	
14	69135126	15×2.4 GB1235-76	O-ring 15×2.4	2	
15		SDT30-01010	Overflow valve core	1	
16		SDT30-01011	Safety valve core	1	
17		SDT30-01013	relief valve spring	1	
18		SDT30-01014	relief valve spring	1	
19		GB/T848-10	Washer 10	1	
20		SDT30-01015	Washer	1	
21	69084487	GB/T893.1-Φ22	Clip spring 22	1	
22		GB/T893.1-18	Clip spring 18	1	
23		FSDT35-03000	Low speed clutch assembly	1	
24	69005632	GB/T894.1-Φ60	Clip spring 60	1	
25		FSDT35-02000	Clutch assembly	1	

图17/Fig17. 变速箱箱体部分2/Tranminssion 2

FD18T-C4WE3 FD18T-C4WV3 FD18T-C4W(6)3

FD25T-C4WE3 FD25T-C4WV3 FD25T-C4W(6)3

FD35T-C4WE3 FD35T-C4WV3 FD35T-C4W(6)3

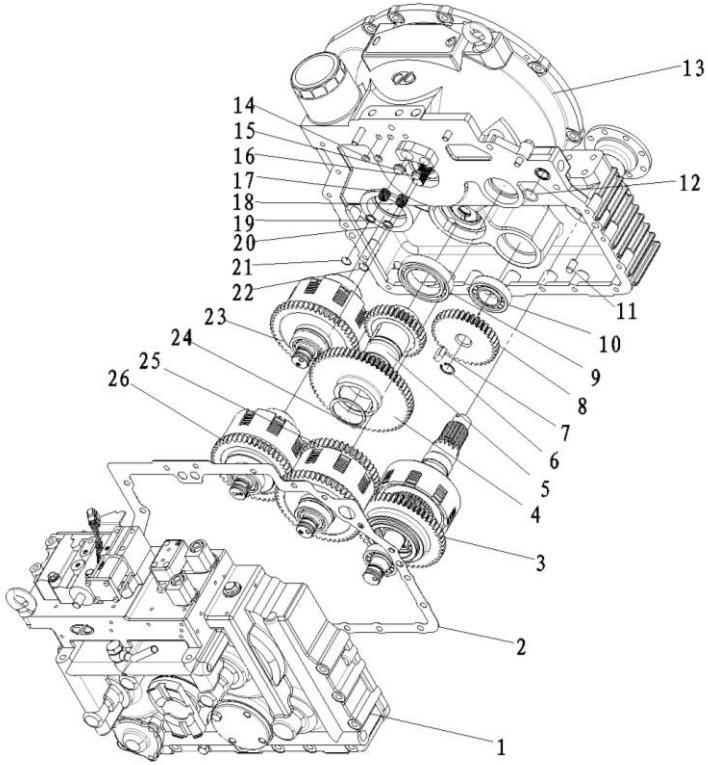

序号		代号	名称	数量	备注
Item No.		Part No.	Descripition	Q'ty	Remark
26		FSDT35-04000	Hige speed clutch assembly	1	

图18/Fig18. 高速轴/HIGH SPEED SHAFT

FD18T-C4WE3 FD18T-C4WV3 FD18T-C4W(6)3

FD25T-C4WE3 FD25T-C4WV3 FD25T-C4W(6)3

FD35T-C4WE3 FD35T-C4WV3 FD35T-C4W(6)3

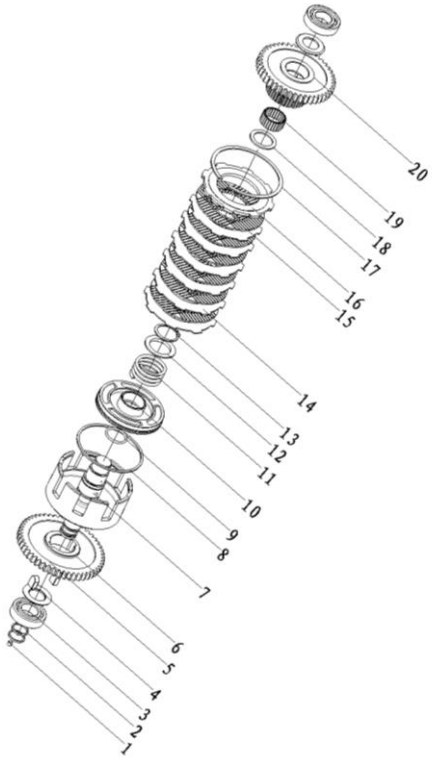

序号		代号	名称	数量	备注
Item No.		Part No.	Descripition	Q'ty	Remark
01		GB/T78-M8*8	Screw M8×8	1	
02	69092035	Y30H-02009	Seal ring (A)	3	进口
03		GB/T276-6026	Bearing	2	NTN
04		Y30H-02006	Thrust ring (B)	2	
05		FSDT35-02004	Gear	1	
06		SDT30-02004	key C14×22×9	2	
07		SDT30-04100	Countershaft assembly	1	
08	69092036	Y30H-02010	Seal ring (B)	1	
09	69136717	GB1235-76-40*3.5	O-seal ring 40×3.5	1	
10		SDT30-02200	Piston assembly	1	
11		SDT30-02003	Return spring	1	
12		Y30H-02004	Spring seat	1	
13	69000070	GB/T894.1-Φ40	Clip spring 40	1	
14	69100188	Y30H-02008	Separate plate	6	
15	69093280	Y30H-02007	Brake shoe	6	进口
16	69100189	Y30H-02012	End plate	1	
17		Y30H-02011A	Snap ring	1	
18		Y30H-02005	Needle bearing (A)	1	
19	69021688	JB/T7918-K35*42*20	Bearing K35×42×20	1	
20		FSDT35-04002	Gear	1	

图19/Fig19. 输入轴 /INPUT SHAFT

FD18T-C4WE3 FD18T-C4WV3 FD18T-C4W(6)3

FD25T-C4WE3 FD25T-C4WV3 FD25T-C4W(6)3

FD35T-C4WE3 FD35T-C4WV3 FD35T-C4W(6)3

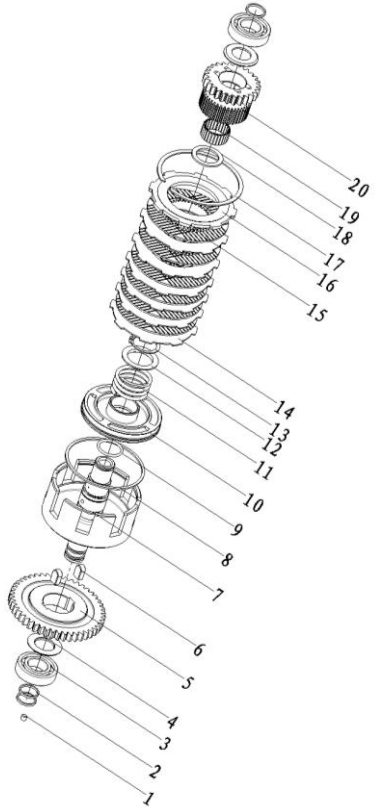

序号		代号	名称	数量	备注
Item No.		Part No.	Descripition	Q'ty	Remark
01		GB/T78-M8*8	Screw M8×8	1	
02	69092035	Y30H-02009	Seal ring (A)	3	进口
03		GB/T276-6026	Bearing 6206	2	NTN
04		Y30H-02006	Thrust ring (B)	2	
05		FSDT35-02001	Gear	1	
06		SDT30-02004	key C14×22×9	2	
07		SDT30-02100	Countershaft assembly	1	
08	69092036	Y30H-02010	Seal ring (B)	1	
09	69136717	GB1235-76-40*3.5	O-seal ring 40×3.5	1	
10		SDT30-02200	Piston assembly	1	
11		SDT30-02003	Return spring	1	
12		Y30H-02004	Spring seat	1	
13	69000070	GB/T894.1-Φ40	Clip spring 40	1	
14	69100188	Y30H-02008	Separate plate	6	
15	69093280	Y30H-02007	Brake shoe	6	进口
16	69100189	Y30H-02012	End plate	1	
17		Y30H-02011A	Snap ring	1	
18		Y30H-02005	Needle bearing (A)	1	
19	69021688	JB/T7918-K35*42*20	Bearing K35×42×20	1	
20		FSDT35-02002	Gear	1	

图20/Fig20. 脱桥轴 /TAKE OFF THE BREDGE AXIS

FD18T-C4WE3 FD18T-C4WV3 FD18T-C4W(6)3

FD25T-C4WE3 FD25T-C4WV3 FD25T-C4W(6)3

FD35T-C4WE3 FD35T-C4WV3 FD35T-C4W(6)3

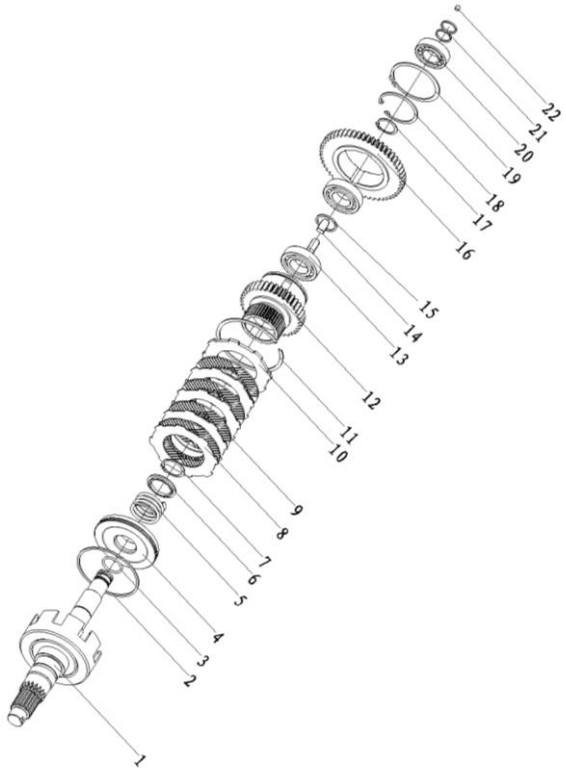

序号		代号	名称	数量	备注
Item No.		Part No.	Descripition	Q'ty	Remark
01		FSDT35-06100	Off axle shaft assembly	1	
02	69092036	Y30H-02010	Seal ring 、V-seal ring (B)	1	
03	69136717	GB1235-76-40*3.5	O-ring 40×3.5	1	
04		SDT30-02200	piston assembly	1	
05		SDT30-02003	Return spring	1	
06		Y30H-02004	Spring seat	1	
07	69000070	GB/T894.1-Φ40	Clip spring 40	1	
08	69100188	Y30H-02008	Separate plate	6	
09	69093280	Y30H-02007	Brake shoe	6	NTN
10	69100189	Y30H-02012	End plate	1	
11		Y30H-02011A	Snap ring	1	
12		FSDT35-06002	gear	1	
13	69012347	GB/T276-D6207	Bearing 6207	2	
14		FSDT35-05008	Key C14×28×9	2	
15		FSDT35-06005	Washer	1	进口
16		FSDT35-06002	gear	1	
17	69005095	GB/T894.1-Φ35	Clip spring 35	1	
18	69011357	GB/T893.1-Φ72	Washer 72	1	
19	69038253	GB/T894.1-Φ90	Clip spring 90	1	
20		GB/T283-NJ206	Bearing NJ206	1	
21	69092035	Y30H-02009	Seal ring 、V-seal ring (A)	2	进口
22		GB/T78-M8*8	Screw M8×8	1	

图21/Fig21. 低速轴 /LOW SPEED SHAFT

FD18T-C4WE3 FD18T-C4WV3 FD18T-C4W(6)3

FD25T-C4WE3 FD25T-C4WV3 FD25T-C4W(6)3

FD35T-C4WE3 FD35T-C4WV3 FD35T-C4W(6)3

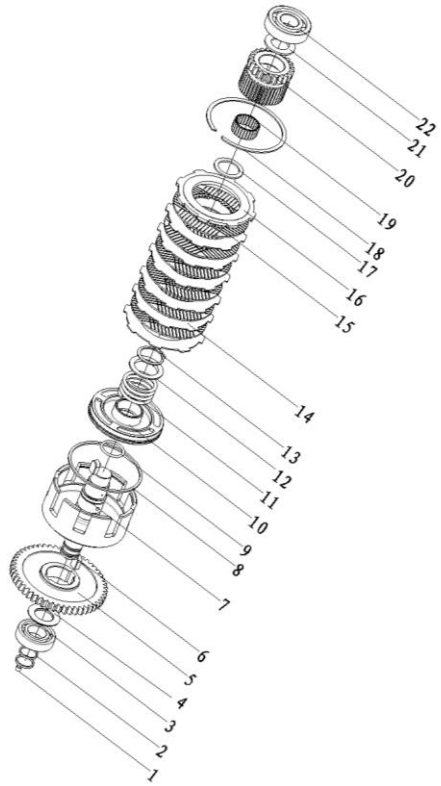

序号		代号	名称	数量	备注
Item No.		Part No.	Descripition	Q'ty	Remark
01		GB/T78-M8*8	Screw M8×8	1	
02	69092035	Y30H-02009	Seal ring (A)	3	
03		GB/T276-6026	Bearing 6206	1	进口
04		Y30H-02006	Thrust ring (B)	1	NTN
05		FSDT35-03001	Gear	1	
06		SDT30-02004	key C14×22×9	2	
07		SDT30-04100	Countershaft assembly	1	
08	69092036	Y30H-02010	Seal ring (B)	1	
09	69136717	GB1235-76-40*3.5	O-seal ring 40×3.5	1	
10		SDT30-02200	Piston ass' y	1	
11		SDT30-02003	Return spring	1	
12		Y30H-02004	Spring seat	1	
13	69000070	GB/T894.1-Φ40	Clip spring 40	1	
14	69100188	Y30H-02008	Separate plate	5	
15	69093280	Y30H-02007	Brake shoe	5	进口
16	69100189	Y30H-02012	End plate	1	
17		Y30H-02005	Thrust plates (A)	1	
18	69021688	JB/T7918-K35*42*20	Needle bearing K35×42×20	1	
19		Y30H-02011A	Snap ring	1	
20		FSDT35-03002	Gear	1	
21		FSDT35-03003	Thrust ring	1	
22	69018614	GB/T276-1994-6306	Bearing 6306	1	进口

图22/Fig22.

FD18T-C4WE3 FD18T-C4WV3 FD18T-C4W(6)3

FD25T-C4WE3 FD25T-C4WV3 FD25T-C4W(6)3

FD35T-C4WE3 FD35T-C4WV3 FD35T-C4W(6)3

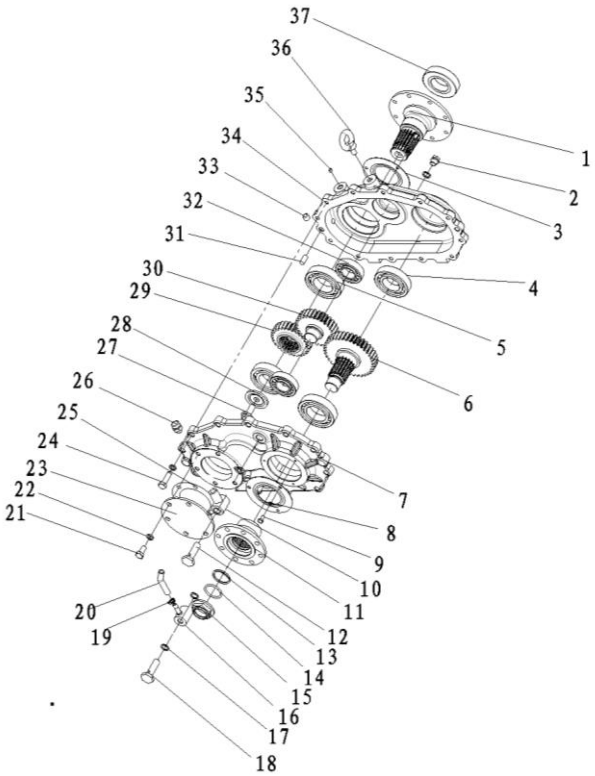

传动箱/TRANSMISSION

序号		代号	名称	数量	备注
Item No.		Part No.	Descripition	Q'ty	Remark
01		FSDT35-07007	Transmission output flange	1	
02		Y30H-01011	Drain plug	2	
03		FSDT35-07009	Dust-proof cap	2	
04	69005920	GB/T276-6208	Bearing 6208	2	
05	69005918	GB/T276-6209	Bearing 6209	2	
06		FSDT35-07005	Transmission output gear	1	
07		FSDT25-07002	Transmission cap	1	
—		FSDT35-07002	Transmission cap	1	
08	69000060	GB/T93-6	Washer 6	6	
09	69000189	GB/T5783-M6*12-8.8J	Bolt M6×12	6	
10		FSDT35-07010	Seal ring	1	
11		FSDT35-06003	Shell flange	1	
12		J30H-01100-1	Breather plug ass'y	1	
13		FSDT35-06005	Washer	1	
14		GB/T3452.1-34.5*3.55	O-ring 34.5×3.55	1	
15		FSDT35-06004	Nut	1	
16		FSDT35-07010-1	Hinged vent	1	
17	69138439	JB982-77-16	Combination sealing washer 16	6	
18		FSDT35-07011	Hinge bolt	2	
19	69000052	JB/T8870-10-16	U-hoopΦ12	2	
20		FSDT35-07015	Return oil hose	1	
21	69000122	GB/T5783-M10*16-8.8J	Bolt M10×16	6	
22	69000053	GB/T93-10	Washer 10	6	
23		FSDT35-07003	Transmission case cover	1	
24	69000130	GB/T5783-M10*35-8.8J	Bolt M10×35	12	

图22/Fig22.

传动箱/TRANSMISSION

FD18T-C4WE3 FD18T-C4WV3 FD18T-C4W(6)3

FD25T-C4WE3 FD25T-C4WV3 FD25T-C4W(6)3

FD35T-C4WE3 FD35T-C4WV3 FD35T-C4W(6)3

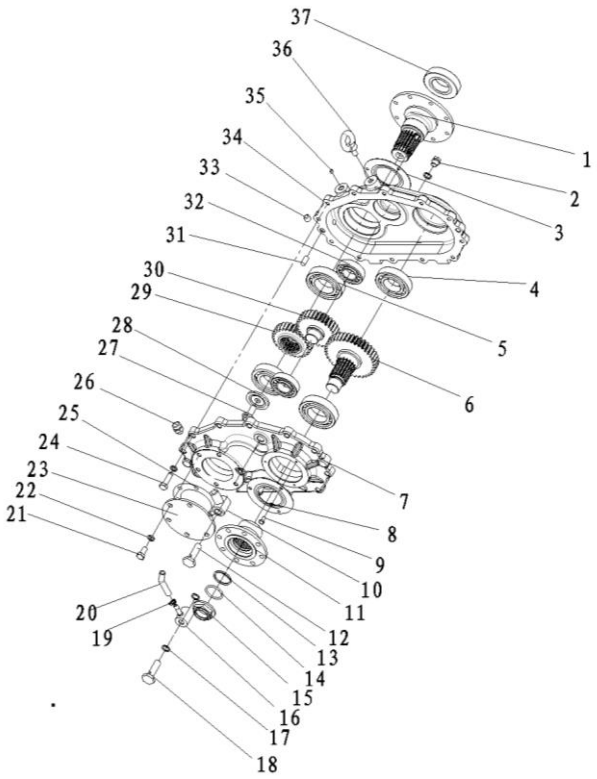

序号		代号	名称	数量	备注
Item No.		Part No.	Descripition	Q'ty	Remark
25		FSDT35-07004	O-ring 80×3.1	1	
26		JC2400	Abat-vent M14×1.5	1	
27		GB/T5789-M12*1.25*30	Bolt M12×1.25×30	1	
28		SDT30-10003	Separate plate	1	
29		FSDT35-07008	Transmission output gear	1	
30		FSDT35-07006	The idler gear box	1	
31	69142228	GB/T119.1-10h8*28	Pin 10×24	2	
32		GB/T283-NJ206	Cylindrical roller bearing NJ206	2	
33		JB/ZQ4446-Rc1/4	Plug Rc1/4	1	
34		FSDT35-07001	Driving hosing	1	
35		JB/ZQ4446-Rc1/8	Plug Rc1/8	1	
36	69095736	GB/T825-M12	Screw M12	1	
37	69092037	SDT30-10004	Oil seal	2	

图23/Fig23.

FD18T-C4WE3 FD18T-C4WV3 FD18T-C4W(6)3

FD25T-C4WE3 FD25T-C4WV3 FD25T-C4W(6)3

FD35T-C4WE3 FD35T-C4WV3 FD35T-C4W(6)3

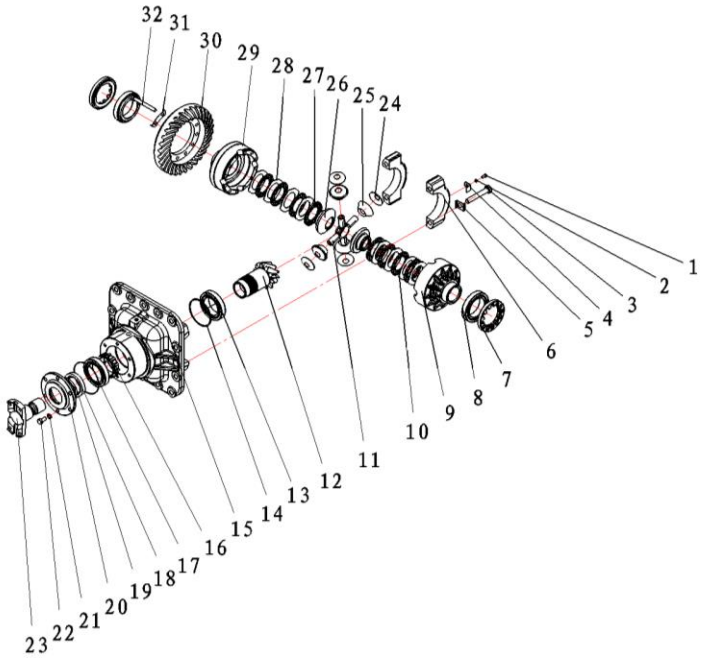

前主减速器/REDUCER ADN LIMITED SLIP DIFFERENTIAL

序号		代号	名称	数量	备注
Item No.		Part No.	Descripition	Q'ty	Remark
01	69000189	GB/T5783-M6*12-8.8J	Bolt M6×12	2	
02	69000060	GB/T93-6	Washer 6	2	
03		Y30H-01010	Bolt	4	
04		FSDT35-08005	Stopper	2	
05	69140506	Y30H-01008	Bering seat lock	4	
06		FSDT35-08003	Bearing block	2	
07		FSDT35-08004	Nut	2	
08	69136389	GB/T297-1994-05	Tapered roller bearing 32013	2	
09		FSDT35-09102	Right differential shell	1	
10	69140503	FSDT35-09010	Static friction plate	2	
11		FSDT35-09200	Cross Shaft	1	
12		FSDT35-09003	Output axis	1	区分25/35
13	69080812	GB/T297-32012	tapered roller bearing 32012	2	
14	69130243	FSDT35-09008	Output shaft gasket	按需	
15		FSDT35-08001	Front seat	1	
16	69130244	FSDT35-09011	Speed measuring gear	1	
17	69009544	GB/T1235-105*3.1	O-ring 105×3.1	1	
18	69140505	SDT30-1004	Seal housing 55×78×12	1	
19	69130245	FSDT35-09009	Nut	1	
20		FSDT35-08002	Main minus end cap	1	
21	69000053	GB/T93-10	Washer 10	6	
22	69000125	GB/T5783-M10*25-8.8J	Bolt M10×25	6	
23		SDT30-03002	Output flange	1	
24	69073793	SQH35010106A	Washer	4	
25	69073795	SQH35010108A	Differential gear	4	

图23/Fig23.

FD18T-C4WE3 FD18T-C4WV3 FD18T-C4W(6)3

FD25T-C4WE3 FD25T-C4WV3 FD25T-C4W(6)3

FD35T-C4WE3 FD35T-C4WV3 FD35T-C4W(6)3

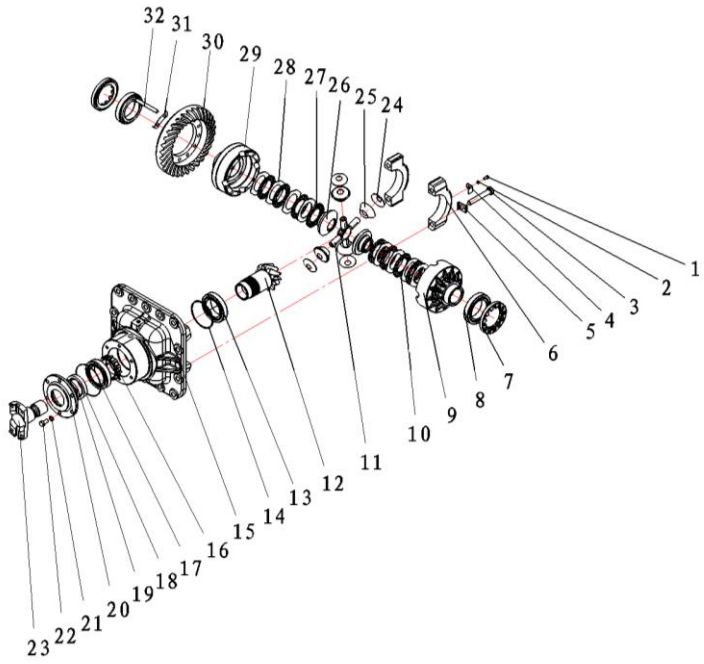

前主减速器/REDUCER ADN LIMITED SLIP DIFFERENTIAL

序号		代号	名称	数量	备注
Item No.		Part No.	Descripition	Q'ty	Remark
26	69073792	SQH35010105A	Gear	2	
27	69073791	SQH35010104A	Friction plate	2	
28	69073790	SQH35010103A	Dynamic friction plate	6	
29		FSDT35-09001	Differential left shell	1	
30		FSDT35-09004	Gear	1	区分25/35
31	69140507	FSDT35-09006	Lock	6	
32		FSDT35-09005	Bolt	12	

图24/Fig24.

后主减速器/REDUCER ADN LIMITED SLIP DIFFERENTIAL

FD18T-C4WE3 FD18T-C4WV3 FD18T-C4W(6)3

FD25T-C4WE3 FD25T-C4WV3 FD25T-C4W(6)3

FD35T-C4WE3 FD35T-C4WV3 FD35T-C4W(6)3

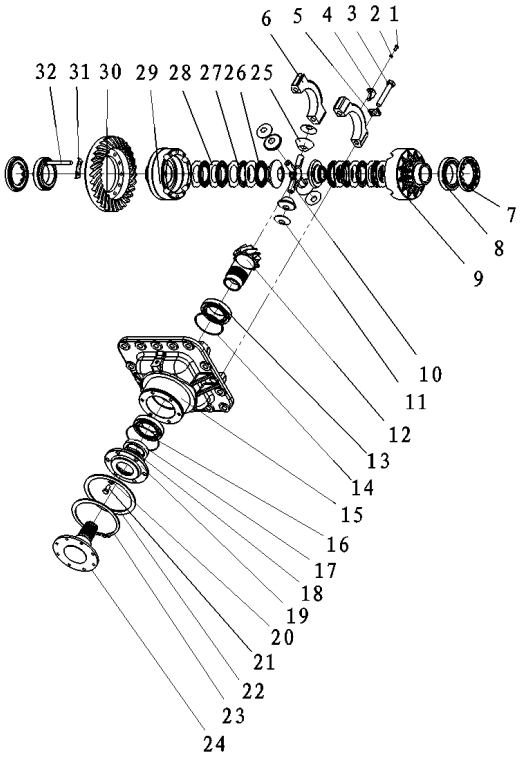

序号 Item No.		代号 Part No.	名称 Descripition	数量 Q'ty	备注 Remark
01	69000189	GB/T5783-M6*12-8.8J	Bolt M6×12	2	
02	69000060	GB/T93-6	Washer 6	2	
03		Y30H-01010	Bolt	4	
04		FSDT35-08005	Stopper	2	
05	69140506	Y30H-01008	Lock	4	
06		FSDT35-08003	Bearing block	2	
07		FSDT35-08004	Nut	2	
08	69136389	GB/T297-1994-05	Tapered roller bearing 32013	2	
09	69073796	SQH35010109A	Right differential shell	1	
10	69073794	SQH35010107A	Cross Shaft	1	
11	69073793	SQH35010106A	Washer	4	
12		FSDT35-09003	Output shaft	1	区分25/35
13	69080812	GB/T297-32012	Tapered roller bearing 32012	2	
14	69130243	FSDT35-09008	Washer	按需	
15		FSDT35-08007	Seat	1	
16	69009544	GB/T1235-105*3.1	O-ring 105×3.1	1	
17	69140505	SDT30-1004	Seal housing 55×78×12	1	
18	69130245	FSDT35-09009	Nut	1	
19		FSDT35-08002	Main minus end cap	1	
20	69000053	GB/T93-10	Washer 10	6	
21	69000125	GB/T5783-M10*25-8.8J	Bolt M10×25	6	
22		FSDT35-08006	Thrust ring	1	
23		GB/T894.1-145	Collar 145	1	
24		FSDT35-09007	Rear main minus input flange	1	
25	69073795	SQH35010108A	Differential gear	4	

图24/Fig24. 后主减速器/REDUCER ADN LIMITED SLIP DIFFERENTIAL

FD18T-C4WE3 FD18T-C4WV3 FD18T-C4W(6)3

FD25T-C4WE3 FD25T-C4WV3 FD25T-C4W(6)3

FD35T-C4WE3 FD35T-C4WV3 FD35T-C4W(6)3

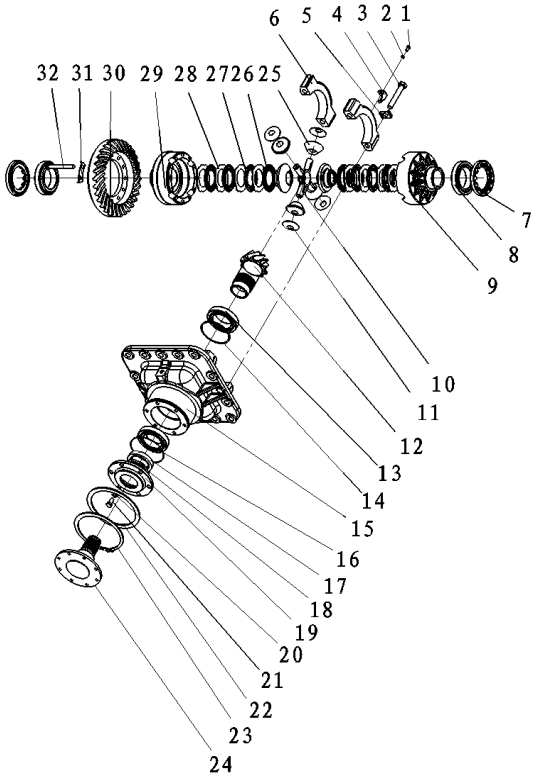

序号		代号	名称	数量	备注
Item No.		Part No.	Descripition	Q'ty	Remark
26	69073791	SQH35010104A	Friction plate	2	
27	69073790	SQH35010103A	Dynamic friction plate	6	
28	69073789	SQH35010102A	Static friction plate	8	
29	69073788	SQH35010101A	Left differential shell	1	
30		FSDT35-09004	Gear	1	
31	69140507	FSDT35-09006	Lock	6	
32		FSDT35-09005	Bolt	12	

图25/Fig25.

1.8-3.5t驱动桥/1.8-3.5t DRIVE AXLE

FD18T-C4WE3 FD18T-C4WV3 FD18T-C4W(6)3

FD25T-C4WE3 FD25T-C4WV3 FD25T-C4W(6)3

FD35T-C4WE3 FD35T-C4WV3 FD35T-C4W(6)3

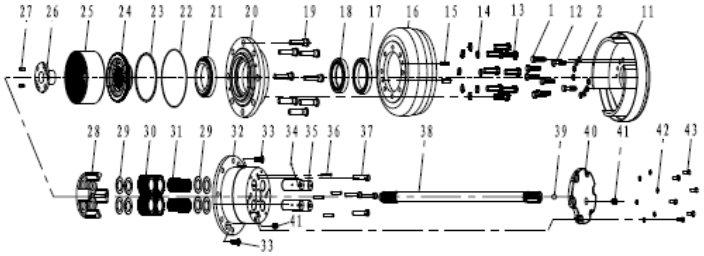

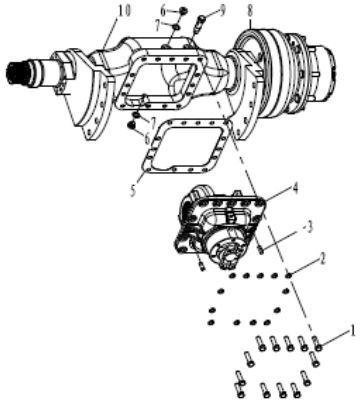

序号		代号	名称	数量	备注
Item No.		Part No.	Descripition	Q'ty	Remark
01	69000160	GB/T5786-M14*1.5*45-8.8J	Bolt M14X1.5X45	29	
02	69005111	GB/T93-14	Washer 14	29	
03	69084637	GB/T119.2-Φ12*32	Pin 12X32	2	
04	69073576	25BY16-03000	Reduction housing	1	1.8t、2.5t
-	69073996	35BY16-03000	Reduction housing	1	3.5t
05	69080889	SQQ35000004B	Washer	2	
06	69080891	SQQ35000006B	Plug M20x1.5	2	
07	69000357	JB/T982-20	Combination washer 20	1	
08	69100810	Q30LD003	Wheel brake ass' y	1	
09	69080895	Q30LD100	Breather plug	1	
10		SQQ35030000B	Axle body	1	
11	69091832	Q30LD002	Wheel brake ass' y (L.H)	4	
12		SQQ35000005B	Bolt M14X1.5X45	12	
13	69000166	GB/T5786-M16*1.5*50-8.8J	Bolt M16X1.5X50	16	
14	69000056	GB/T93-16	Washer 16	4	
15	69084637	GB/T119.2-Φ12*32	Pin 12X32	2	
16	69090836	SQQ35020002B	Brake drum	2	
17	69080621	110X140X14.5/16	Oil seal 110X140X14.5/16	2	SIMRIT
18	69083029	TIMKEN	Bearing JL819349/JL819310	16	
19	69080818	SQH35070002	Bolt	2	
20	69110445	SQQ35020001B	Hub	1	
21	69083029	TIMKEN	Bearing 37431A/37625	2	
22	69081018	GB/T3452.1-223*2.65	O-ring 223x2.65	2	
23	69079304	SQH35050003	Ring	2	
24	69092697	SQH35050001	Bracket	2	

图25/Fig25.

1.8-3.5t驱动桥/2-3.5tDRIVE AXLE

FD18T-C4WE3 FD18T-C4WV3 FD18T-C4W(6)3

FD25T-C4WE3 FD25T-C4WV3 FD25T-C4W(6)3

FD35T-C4WE3 FD35T-C4WV3 FD35T-C4W(6)3

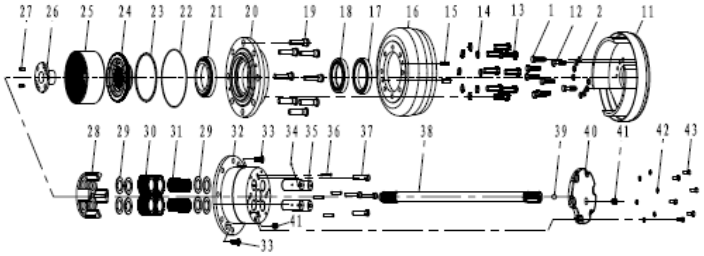

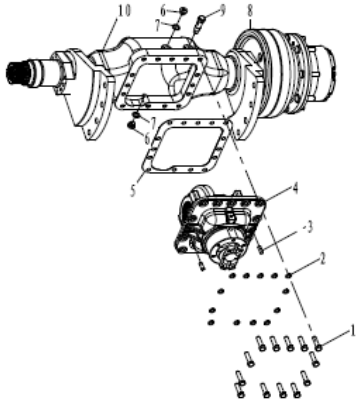

序号		代号	名称	数量	备注
Item No.		Part No.	Descripition	Q'ty	Remark
25	69092698	SQH35050002A	Gear ring	2	
26		SQQ35000007B	Nut	2	
27	69010307	GB/T70.1-M8*12-8.8J	Screw M8×12	4	
28	69092704	SQQ35040002	Bracket	2	
29	69092702	SQH35040006	Snap ring	16	
30	69092703	SQH35040002A	Planet gear	8	
31	69080816	GB/T309-5*39.8	Needle 5x39.8	224	
32	69092701	SQQ35040001A	Planet gear breaket	2	
33	69080883	SQH35000025	Screw M12×30	4	
34	69138382	GB/T308-2002	Steel ball 15/64″	8	
35	69092700	SQH35040005	Gear shaft	8	
36	69092732	GB/T119.2-2000-10M6X40	Pin M6×40	8	
37	69092733	GB/T5786-2000-M14X1.5X55	Bolt M14×1.5×55	8	
38	69083359	SQQ35000003B	Half axle	2	
39	69080867	GB/T308-11/16	Steel ball 11/16″	2	
40	69080868	SQQ35000002B	Bottom cap	2	
41	69092699	SQQ35000001B	Plug M14×1.5	4	
42	69000053	GB/T93-10	Washer 10	12	
43	69000123	GB/T5783-M10*20-8.8J	Bolt M10x20	12	

图26/Fig26.

传动轴及安装/Gear pump shaft mount

FD18T-C4WE3 FD18T-C4WV3 FD18T-C4W(6)3

FD25T-C4WE3 FD25T-C4WV3 FD25T-C4W(6)3

FD35T-C4WE3 FD35T-C4WV3 FD35T-C4W(6)3

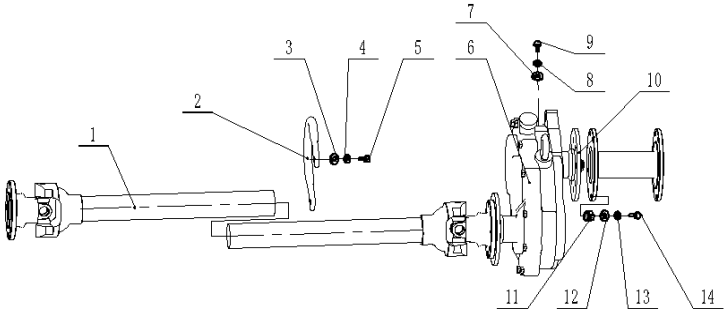

序号			名称	数量	备注
Item No.		Part No.	Descripition	Q'ty	Remark
A	-	-	Gear pump shaft mount	2	
01	69071567	25BY32-01000	Gear pump shaft Ⅰ	1	4TNE98
-	69076483	25BY32LS-01000	Gear pump shaft Ⅰ	1	S4S、D04EG
02	69067119	35BJ32-00001	Hoop	1	
03	69000250	GB/T97.1-10	Washer 10	2	
04	69000053	GB/T93-10	Washer 10	2	
05	69000130	GB/T5783-M10*35-8.8J	Bolt M10×35	2	
06	69071569	25BY32-02000	Driving hosing	1	1.8-2.5T
-	69071683	35BY32-01000	Driving hosing	1	3.5T
07	69000251	GB/T97.1-12	Washer 12	4	
08	69000054	GB/T93-12	Washer 12	4	
09	69000213	GB/T5786-M12*1.25*30-8.8J	Bolt M12×1.25×30	4	
10	69071568	25BY32-03000	Gear pump shaft Ⅱ	1	
11	69000292	GB/T889.1-M8-8J	Nut M8	8	
12	69000259	GB/T97.1-8	Washer 8	8	
13	69000062	GB/T93-8	Washer 8	8	
14	69000311	GB/T5783-M8*35-8.8J	Bolt M8×35	8	

图27/Fig27.

FD18T-C4WE3 FD18T-C4WV3 FD18T-C4W(6)3

FD25T-C4WE3 FD25T-C4WV3 FD25T-C4W(6)3

FD35T-C4WE3 FD35T-C4WV3 FD35T-C4W(6)3

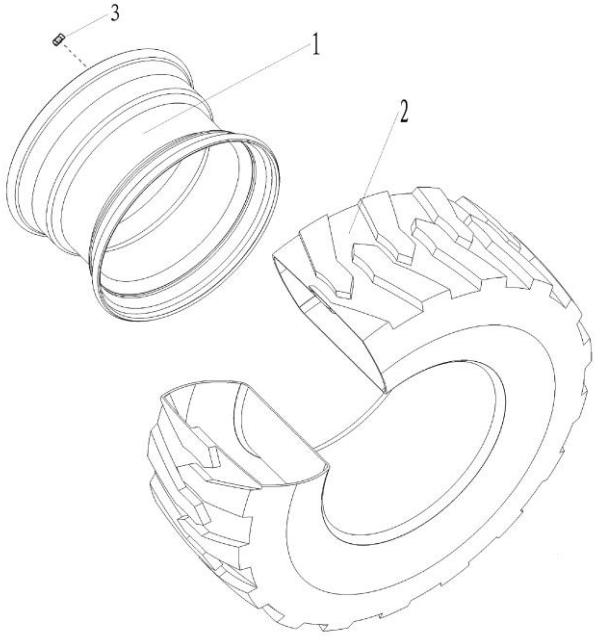

前轮(单轮))/FRONT WHEEL ASS'Y(2t-3.5t SINGLE TIRE)

序号		代号	名称	数量	备注
Item No.		Part No.	Descripition	Q'ty	Remark
A	-	-	Front wheel ass'y	2	
01	69071575	25BY33-01000-B	Steel ring	2	1.8-2.5T，9.75-16.5
—	69095792	25BY33-01000-H	Steel ring	2	1.8-2.5T，9.75-16.5
-	69071685	35BY33-01000	Steel ring	2	3.5T，10.5-17.5
-	69133330	35BY33-01000-H	Steel ring	2	3.5T，10.5-17.5
02	69041912	25B33-01000	Tyre ass'y	2	1.8-2.5T，12-16.5-12PR
—	69041866	35B33-01000	Tyre ass'y	2	3.5T，14-17.5L-14PR-NSH
03	69063479	QC/T354-M18*1.5-8J	Nut M18×1.5	16	

图28/Fig28.

FD18T-C4WE3 FD18T-C4WV3 FD18T-C4W(6)3

FD25T-C4WE3 FD25T-C4WV3 FD25T-C4W(6)3

FD35T-C4WE3 FD35T-C4WV3 FD35T-C4W(6)3

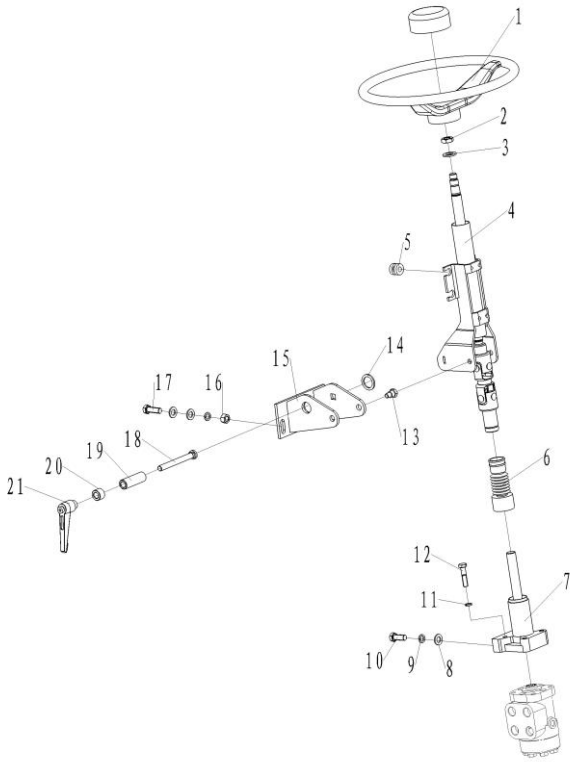

转向装置及安装/STEERING SYSTEM

序号		代号	名称	数量	备注
Item No.		Part No.	Descripition	Q'ty	Remark
A	-	-	Steering system	1	
01	69001648	M3034201000	Steering wheel ass'y Φ360	1	
02	69003072	GB/T6173-M16*1.5-8J	Nut M16×1.5	1	
03	69000253	GB/T97.1-16	Washer 16	1	
04	69001644	M3034202000	Column	1	
05	69020884	M3034200007	Rubber danper	1	
06	69001643	M3034200001	Dust-proof cover cover	1	
07	69001757	M3034203000	Flange	1	
08	69000251	GB/T97.1-12	Washer 12	6	
09	69000054	GB/T93-12	Washer 12	4	
10	69000141	GB/T5786-M12*1.25*50-8.8J	Bolt M12×1.25×50	2	
11	69000053	GB/T93-10	Washer 10	4	
12	69017603	GB/T5782-M10*45-8.8J	Bolt M10×45	4	
13	69000293	M3034200006	Bolt	2	
14	69011791	M2577400003 (3MM)	Multi-way valve	2	
15	69041869	35B42-01000	Orbitrol brecket	1	
16	69020188	GB/T6170-M12	Nut M12	2	
17	69000306	GB/T5783-M12*30-8.8J	Bolt M12×30	2	
18	69023126	30342M-00001	Connecting shaft	1	
19	69023128	30342M-00003	Collar	1	
20	69023127	30342M-00002	Collar	1	
21	69025906	45742-02000	Lock handle	1	

图29/FIG29.

FD18T-C4WE3 FD18T-C4WV3 FD18T-C4W(6)3

FD25T-C4WE3 FD25T-C4WV3 FD25T-C4W(6)3

FD35T-C4WE3 FD35T-C4WV3 FD35T-C4W(6)3

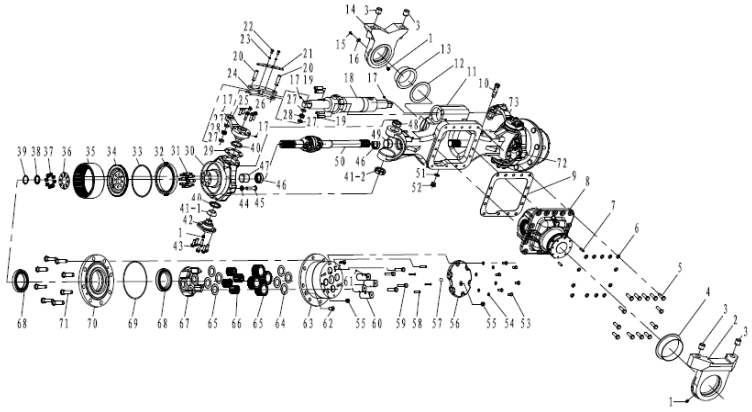

转向桥及安装/STEERING AXLE MOUNT

序号		代号	名称	数量	备注
Item No.		Part No.	Descripition	Q'ty	Remark
01	69003941	JB/T7940.1-M10*1	Nipple M10X1	4	
02	69098535	SQH35070001B	Bracket	1	
03	69081029	SQH35000007B	Positioning bushing	4	
04	69092978	SQH35070002B	Bushing	1	
05	69000160	GB/T5786-M14*1.5*45-8.8J	Bolt M14X1.5X45	13	
06	69005111	GB/T93-14	Washer 14	13	
07	69084637	GB/T119.2-Φ12*32	Pin 12X32	2	
08	69073997	35BY43-01100	Reduction housing	1	3.5T
-	69073577	25BY43-01100	Reduction housing	1	2.5T
09	69080889	SQQ35000004B	Washer	1	
10	69080895	Q30LD100	Breather plug (R2)1/2	1	
11	69083360	SQH35030001B	Axle housing	1	
12	69080888	SQH35000012B/13B/14B	Adjusting shim set	1组	
13	69092976	SQH35000006	Bushing	1	
14	69098901	SQH35060001B*	Bracket	1	
15	69000190	GB/T5783-M6*16-8.8J	Bolt M6X16	1	
16		SQH35000030	Washer	1	
17	69084689	JB/T7940.1-M6	Nipple M6	6	
18		SQH35050000B	Steering cylinder ass' y	1	
19	69010311	GB/T70.1-M12*45-8.8J	Screw M12X45	4	
20	69081027	SQH35000005B	Link pin	4	
21	69081028	SQH35000006B	Baffle	2	
22	69000309	GB/T5783-M8*16-8.8J	Bolt M8x16	4	
23	69000062	GB/T93-8	Washer 8	4	
24	69081029	SQH35000007B	Link	2	

图29/FIG29.

FD18T-C4WE3 FD18T-C4WV3 FD18T-C4W(6)3

FD25T-C4WE3 FD25T-C4WV3 FD25T-C4W(6)3

FD35T-C4WE3 FD35T-C4WV3 FD35T-C4W(6)3

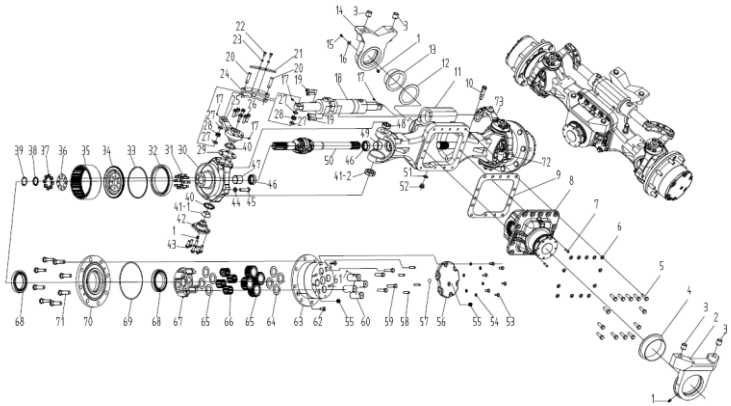

转向桥及安装/STEERING AXLE

序号		代号	名称	数量	备注
Item No.		Part No.	Descripition	Q'ty	Remark
25	69080874	SQH35000008B	Lever	1	
26	69080875	SQH35000009B	Bolt M12X1.25X40	12	
27	69080886	SQH35000004B	Bushing	8	
28	69000585	H24C4-32061	Oscillating bearing(GE16ES)	4	
29	69080877	SQH35000010B/11B	Adjusting shim set	1组	
30	69092926	SQH35020001B	Knuckle ass' y (left)	1	
31	69089664	SQH35000010	Rim bolt	16	
32	69109659	CFW(155*190*17.5/19)	Oil seal 155X190X17.5/19	2	
33	69079304	SQH35050003	Ring	2	
34	69092697	SQH35050001	Bracket	2	
35	69092698	SQH35050002A	Gear ring	2	
36	69080870	SQH35000024	Ring	2	
37	69081021	GB/T6176-M12*1.25-10J	Nut M12X1.25	16	
38	69080882	SQH35000027	Ring	2	
39	69080881	SQH35000026A	Clip spring	2	
40	69080876	SQH35000004	Dust-proof seal	4	
41	69080855	GAC35S	Oscillating bearing 35X62X18	2	
42	69088368	SQH35000002	Support pin	2	
43		SQH350000029	Bolt M12X1.25X35	12	
44	69142238	GB/T6172.1-M16	Nut M16	2	
45		SQH35020002B	Bolt M16X70	2	
46	69080854	CFW	Oil seal 45X60X16	4	
47	69083031	SQH35020003B	Bush bearing 45x50x40	2	
48	69080851	SQH35000017	Bushing 35X52X21.5	2	
49	69080853	SQH35000008	Bush bearing 45X50X30	2	

图29/FIG29.

FD18T-C4WE3 FD18T-C4WV3 FD18T-C4W(6)3

FD25T-C4WE3 FD25T-C4WV3 FD25T-C4W(6)3

FD35T-C4WE3 FD35T-C4WV3 FD35T-C4W(6)3

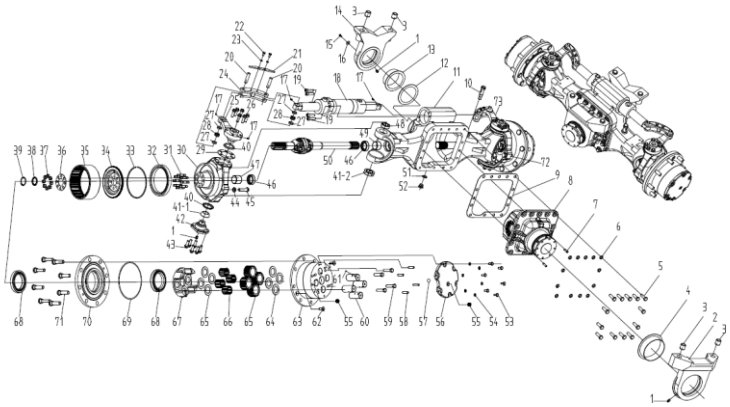

转向桥及安装/STEERING AXLE

序号 Item No.		代号 Part No.	名称 Descripition	数量 Q'ty	备注 Remark
50	69084443	SQH35010000B	Half axle	2	
51	69000357	JB/T982-20	Combination washer 20	2	
52	69080891	SQQ35000006B	Plug M20x1.5	2	
53	69000123	GB/T5783-M10*20-8.8J	Bolt M10x20	12	
54	69000053	GB/T93-10	Washer	12	
55	69080814	Q30LD006	Plug R2-1/2	4	
56	69080868	SQQ35000002B	Bottom cap	2	
57	69080867	GB/T308-11/16	Steel ball 11/16″	2	
58	69092732	GB/T119.2-2000-10M6X40	Pin M6X40	8	
59	69136826	GB/T5786-M14*1.5*55	Bolt M14X1.5X55	8	
60	69092700	SQH35040005	Gear shaft	8	
61	69057395	GB/T308-77-15/64	Steel ball 15/64″	8	
62	69080883	SQH35000025	Screw M12X30	4	
63	69092701	SQQ35040001A	Planet gear breaket	2	
64	69092702	SQH35040006	Snap ring	16	
65	69092703	SQH35040002A	Planet gear	8	
66	69080816	GB/T309-5*39.8	Needle 5x39.8	224	
67	69092704	SQQ35040002	Bracket	2	
68	69083029	TIMKEN	Bearing HH819349/HH819310/95X135X20	4	
69	69081018	GB/T3452.1-223*2.65	O-ring 223x2.65	2	
70	69087285	SQH35070001	Hub	2	
71	69080818	SQH35070002	Bolt	16	
72	69089665	SQH35040001B	Knuckle ass' y (right)	1	
73	69080880	SQH35000003B	Lever	1	

图30/Fig30. 后轮总成/REAR WHEEL ASS'Y

FD18T-C4WE3 FD18T-C4WV3 FD18T-C4W(6)3
FD25T-C4WE3 FD25T-C4WV3 FD25T-C4W(6)3
FD35T-C4WE3 FD35T-C4WV3 FD35T-C4W(6)3

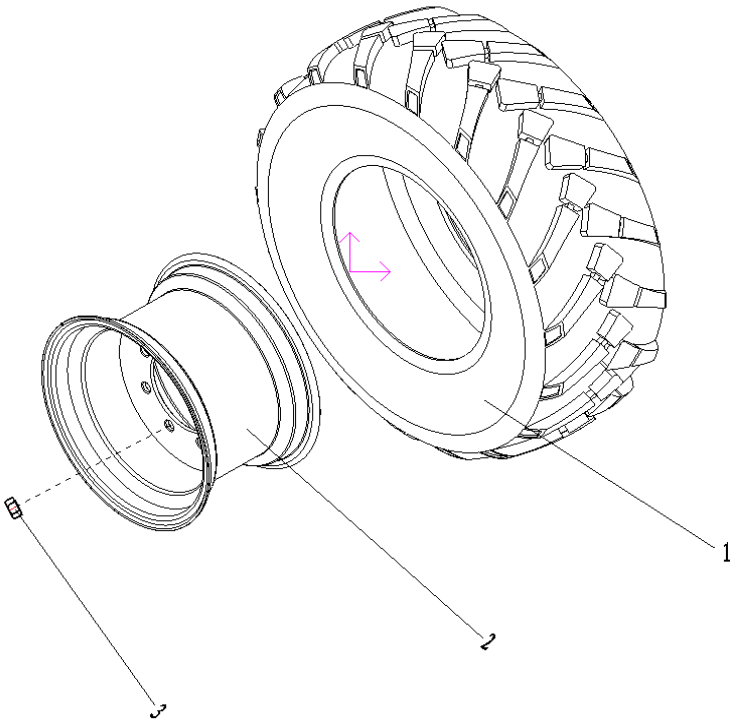

序号		代号	名称	数量	备注
Item No.		Part No.	Description	Q'ty	Remark
A	N/A	N/A	Rear wheel ass'y	2	
01	69059272	35BJ44-01000	Front whee	2	10.0/75-15.3
02	69059273	35BJ44-02000-B	Rim	2	9-15.3
-	69095795	35BJ44-02000-H	Rim	2	9-15.3
03	69063479	QC/T354-M18*1.5-8J	Nut M18×1.5	16	

图31/Fig31.

FD18T-C4WE3 FD18T-C4WV3

FD25T-C4WE3 FD25T-C4WV3

FD35T-C4WE3 FD35T-C4WV3

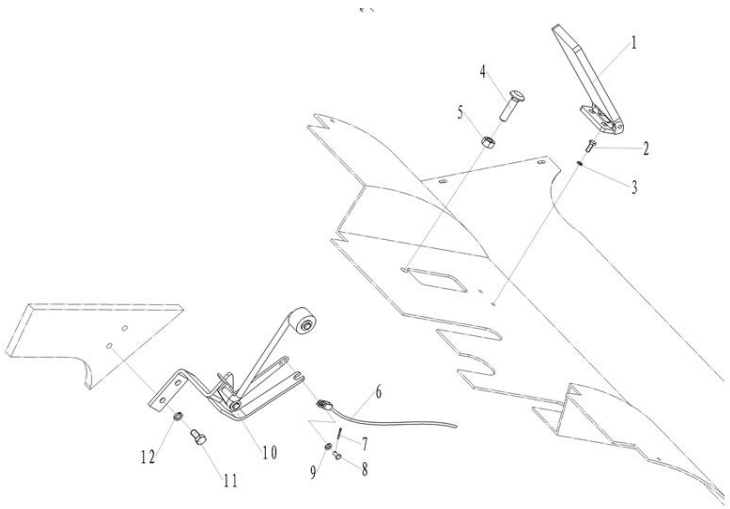

油门操纵/ACCELERATOR PEDAL

序号		代号	名称	数量	备注
Item No.		Part No.	Descripition	Q'ty	Remark
A	N/A	N/A	Accelerator pedal mount	1	
01	69001946	M3035201000	Accelerator pedal	1	
02	69000190	GB/T5783-M6*16-8.8J	Bolt M6×16	2	
03	69000060	GB/T93-6	Washer 6	2	
04	69000267	M6045200003	Bolt	1	
05	69000314	GB/T6171-M12*1.25-8J	Nut M12×1.25	1	
06	69001942	M30452I02000	Accelerator cable	1	4TNE98
-	69001943	M30252N01000	Accelerator cable	1	S4S
07	69005787	GB/T91-2*16	Pin 2×16	2	
08	69039525	GB/T882-Φ6*12	Pin shaft 6×12	2	
09	69000258	GB/T97.1-6	Washer 6	2	
10	69088748	25BY52-01000A	Accelerator bracket ass'y	1	
11	69000123	GB/T5783-M10*20-8.8J	Bolt M10×20	2	
12	69000053	GB/T93-10	Washer 10	2	

图32/Fig32. 油门操纵（电子）/ACCELERATOR PEDAL(ELECTRONIC)

FD18T-C4W(6)3

FD25T-C4W(6)3

FD35T-C4W(6)3

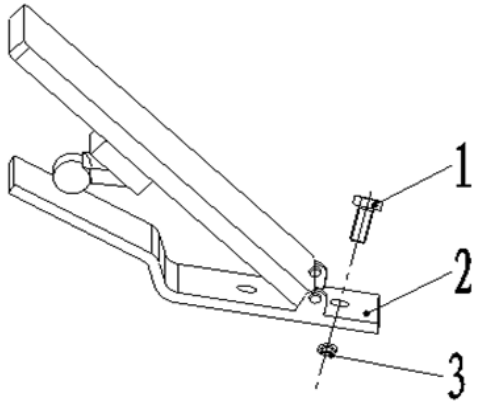

序号		代号	名称	数量	备注
Item No.		Part No.	Description	Q'ty	Remark
A	N/A	N/A	Accelerator ASS'Y	1	
1	69000198	GB/T5783-M8*20-8.8J	Bolt M8×20	3	
2	69071781	25BY52LF-01000	Electronic accelerator(402452)	1	
3	69000062	GB/T93-8	Washer 8	3	

图33/Fig33.

FD18T-C4WE3 FD18T-C4WV3 FD18T-C4W(6)3

FD25T-C4WE3 FD25T-C4WV3 FD25T-C4W(6)3

FD35T-C4WE3 FD35T-C4WV3 FD35T-C4W(6)3

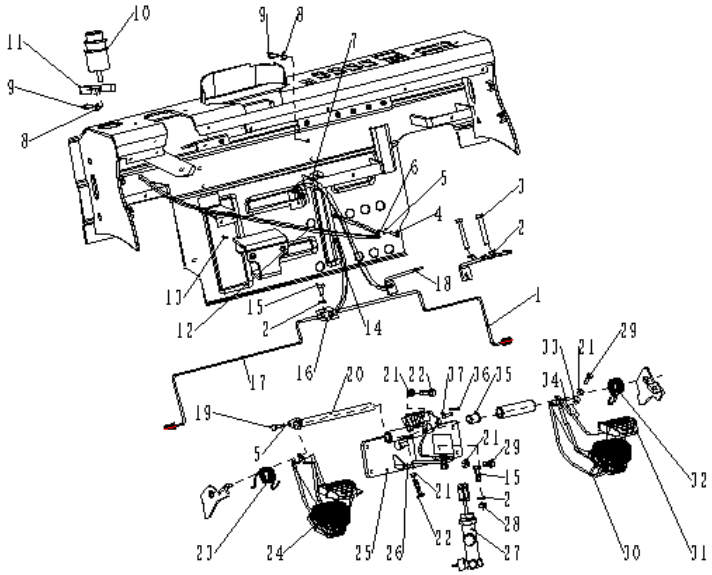

制动微动操纵/BRAKE & INCHING CONTROL

序号		代号	名称	数量	备注
Item No.		Part No.	Descripition	Q'ty	Remark
A	N/A	N/A	Brake & inching pedal	1	
01	69071592	25BY58-02000	Right brake hard tube	1	
02	69000053	GB/T93-10	Washer 10	7	
03	69000209	GB/T5782-M8*70-8.8J	Bolt M8×70	2	
04	69000189	GB/T5783-M6*12-8.8J	Bolt M6×12	2	
05	69000060	GB/T93-6	Washer 6	2	
06	69065125	GMS-DJRX	Pipe clamp 9.5	2	
07	69069780	S30458-02000	Inching cable	1	
08	69000062	GB/T93-8	Washer 8	5	
09	69000198	GB/T5783-M8*20-8.8J	Bolt M8×20	5	
10	69001972	M3035401000	Reservoir	1	
11	69071629	M3035405001	Reservoir seat	1	
12	69127583	S30458-00001	Hose Φ8×3-(515)	1	用69018200剪
13	69042429	JB/T8870-12-20	Hoop d12-20	2	
14	69071593	25BY58-03000	Brake hose ass'y	1	
15	69000128	GB/T5783-M10*30-8.8J	Bolt M10×30	3	
16	69006858	M6046000001	Tee connector	1	
17	69071591	25BY58-01000	Left brake hard tube	1	
18	69036226	A30458-00003	Bracket	1	
19	69000190	GB/T5783-M6*16-8.8J	Bolt M6×16	1	
20		S30458-01400	Pin shaft	1	
21	69000112	GB/T6170-M8-8J	Nut M8	4	
22	69000206	GB/T5783-M8*40-8.8J	Bolt M8×40	2	
23	69069736	S30458-01002	Torsional spring	1	
24	69136476	S30458-01300A	Inching pedal	1	

图33/Fig33.

FD18T-C4WE3 FD18T-C4WV3 FD18T-C4W(6)3

FD25T-C4WE3 FD25T-C4WV3 FD25T-C4W(6)3

FD35T-C4WE3 FD35T-C4WV3 FD35T-C4W(6)3

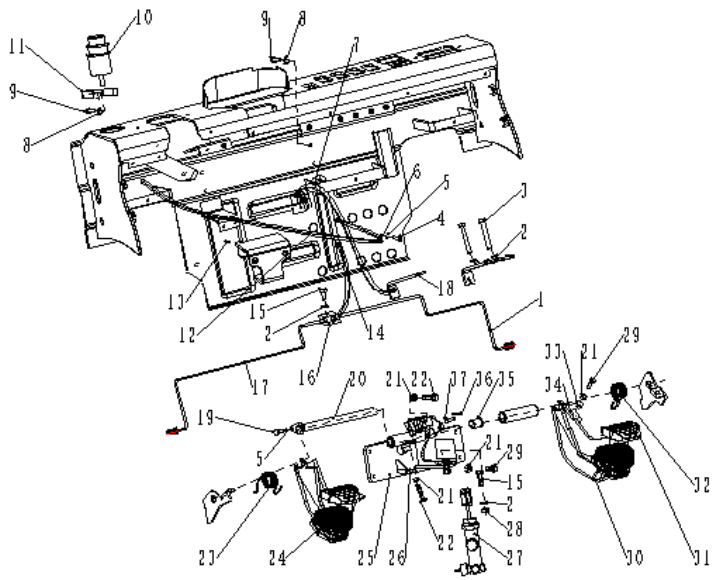

制动微动操纵/BRAKE & INCHING CONTROL

序号		代号	名称	数量	备注
Item No.		Part No.	Descripition	Q'ty	Remark
25		S30458-01100	Bracket	1	
26	69095445	S30458-01000A	Foot brake assembly	1	
27	69069786	S30458-04000	Master cylinder	1	
28	69000103	GB/T6170-M10-8J	Nut M10	3	
29	69000200	GB/T5783-M8*25-8.8J	Bolt M8×25	2	
30		S30458-01200	Brake pedal	1	
31	69039265	A30458-01005	Pedal cover	2	
32	69069734	S30458-01001	Torsional spring	1	
33	69020760	GB/T91-2*25	Cotter pin 2x25	2	
34	69021756	M3035402003	Adjusting shaft	2	
35	69136234	FB1825	Self lubricating bearing flange	4	
36	69006485	GB/T91-3*20	Cotter pin 3x20	1	
37	69008457	GB/T882-Φ8*26	Pin shaft 8×26	1	

图34/Fig34.

FD18T-C4WE3 FD18T-C4WV3 FD18T-C4W(6)3

FD25T-C4WE3 FD25T-C4WV3 FD25T-C4W(6)3

FD35T-C4WE3 FD35T-C4WV3 FD35T-C4W(6)3

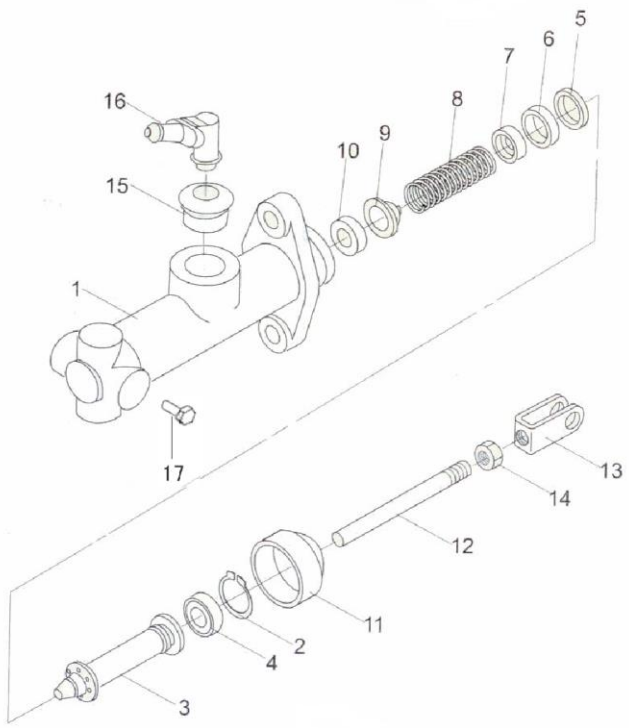

制动总泵/MASTER CYLINDER

序号		代号	名称	数量	备注
Item No.		Part No.	Descripition	Q'ty	Remark
A	69136798	25595-40302	Master cylinder	1	
01	69135318	25595-42301	Valve body	1	
02	69135319	25595-42311	Ring	1	
03	69135320	25595-42332	Piston	1	
B	69135321	25595-40402	Cup ass'y	1	
04	69135322	25595-42322	Front cup	1	
05	69135323	25595-42341	Bushing cup	1	
06	69135324	25595-42351	Main cup	1	
07	69135325	25595-42361	Spring seat	1	
08	69135326	25595-42371	Spring	1	
09	69135327	25595-42381	Cut-off valve	1	
10	69135328	25595-42391	Valve seat	1	
11	69135329	25595-42431	Protect cover	1	
12		S30458-04001	Rod	1	
13	69135330	25595-42451	Clevis	1	
14	69088946	B5050-00008	Nut M8	1	
15	69135331	25595-42421	Rubber bushing	1	
16	69135332	25595-42411	Connector	1	
17		A30458-04003	Plug	1	

图35/Fig35.

手制动操纵/PARKING BRACK CONTROL

FD18T-C4WE3 FD18T-C4WV3 FD18T-C4W(6)3

FD25T-C4WE3 FD25T-C4WV3 FD25T-C4W(6)3

FD35T-C4WE3 FD35T-C4WV3 FD35T-C4W(6)3

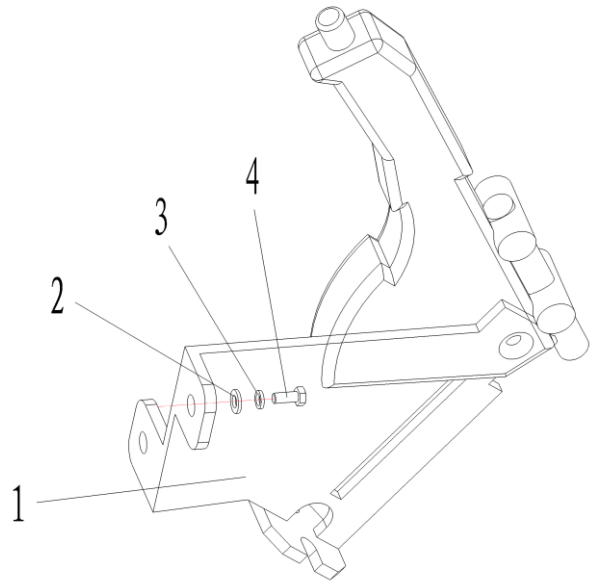

序号		代号	名称	数量	备注
Item No.		Part No.	Description	Q'ty	Remark
01	69032109	A30455-01000	Parking brake	1	
02	69000250	GB/T97.1-10	Washer 10	2	
03	69000053	GB/T93-10	Washer 10	2	
04	69000125	GB/T5783-M10*25-8.8J	Bolt M10×25	2	

图36/Fig36.

FD18T-C4WE3 FD18T-C4WV3 FD18T-C4W(6)3

FD25T-C4WE3 FD25T-C4WV3 FD25T-C4W(6)3

FD35T-C4WE3 FD35T-C4WV3 FD35T-C4W(6)3

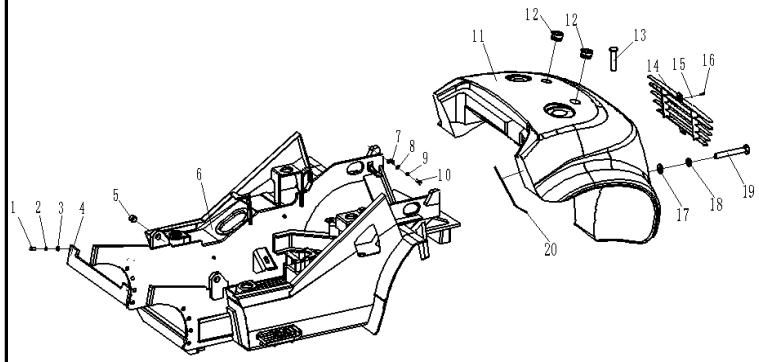

车架与平衡重/FRAME &COUNTERBALABCE WEIGHT

序号		代号	名称	数量	备注
Item No.		Part No.	Descripition	Q'ty	Remark
01	69000306	GB/T5783-M12*30-8.8J	Bolt M12×30	4	
02	69000054	GB/T93-12	Washer 12	4	
03	69000251	GB/T97.1-12	Washer 12	4	
04		35B61-04000	Front plate	1	
05	69034281	A30461-00001	Bush bearing	2	
06	69103350	25BY61-00000-1-MRed	Frame	1	1.8-2.5T 4TNE98 取消2020.1.15
-	69145315	25BY61-00000A-Mred	Frame	1	1.8-2.5T 使用2020.3.2
-	69145317	25BY61-00000A-Mgreen	Frame	1	1.8-2.5T 使用2020.3.2
-	69145314	25BY61-00000A-Morange	Frame	1	1.8-2.5T 使用2020.3.2
-	69145316	25BY61-00000A-Myellow	Frame	1	1.8-2.5T 使用2020.3.2
-	69103365	35BY61-00000-1-MRed	Frame	1	3.5T 4TNE98，取消2020.
-	69145303	35BY61-00000A-Mred	Frame	1	3.5T 使用2020.3.2
-	69145305	35BY61-00000A-Mgreen	Frame	1	3.5T 使用2020.3.2
-	69145302	35BY61-00000A-Morange	Frame	1	3.5T 使用2020.3.2
-	69145304	35BY61-00000A-Myellow	Frame	1	3.5T 使用2020.3.2
-	69076484	25BY61LS-00000-1	Frame	1	1.8-2.5T S4S，取消2020.1.15
-	69107561	35BY61LS-00000A-1-MRed	Frame	1	3.5T S4S，取消2020.1.15
-	69103353	25BY61LF-00000-1-MRed	Frame	1	2.5T D04EG
-	69107538	25BY61LF-00000-1-MGreen	Frame	1	2.5T D04EG
-	69107540	25BY61LF-00000-1-MOrange	Frame	1	2.5T D04EG
-	69107539	25BY61LF-00000-1-MYellow	Frame	1	2.5T D04EG
-	69103366	35BY61LF-00000-1-MRed	Frame	1	3.5T D04EG，取消2020.
-	69145331	35BY61LF-00000A-Mred	Frame	1	3.5T D04EG，使用2020.
-	69145333	35BY61LF-00000A-Mgreen	Frame	1	3.5T D04EG，使用2020.
-	69145330	35BY61LF-00000A-Morange	Frame	1	3.5T D04EG，使用2020.

图36/Fig36.

FD18T-C4WE3 FD18T-C4WV3 FD18T-C4W(6)3

FD25T-C4WE3 FD25T-C4WV3 FD25T-C4W(6)3

FD35T-C4WE3 FD35T-C4WV3 FD35T-C4W(6)3

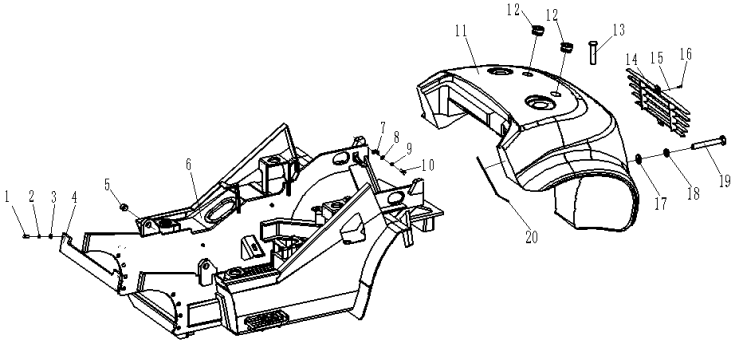

车架与平衡重/FRAME &COUNTERBALABCE WEIGHT

序号		代号	名称	数量	备注
Item No.		Part No.	Descripition	Q'ty	Remark
-	69145332	35BY61LF-00000A-Myellow	Frame	1	3.5T D04EG，使用2020
07	69015141	M3036300006-2mm	Adjusting pad	2-4	
08	69000259	GB/T97.1-8	Washer 8	2	
09	69000062	GB/T93-8	Washer 8	2	
10	69000198	GB/T5783-M8*20-8.8J	Bolt M8×20	2	
11	69108589	18BY63-00001-MRed	Counter balance	1	1.8T
-	69103341	18BY63-00001-MGreen	Counter balance	1	1.8T
-	69108588	18BY63-00001-MOrange	Counter balance	1	1.8T
-	69108587	18BY63-00001-MYellow	Counter balance	1	1.8T
-	69103355	25BY63-00001-MRed	Counter balance	1	2.5T，取消2020.1.15
-		25BY63-00001A-Mred	Counter balance	1	2.5T，使用2020.3.2
-		25BY63-00001A-Mgreen	Counter balance	1	2.5T，使用2020.3.2
-		25BY63-00001A-Morange	Counter balance	1	2.5T，使用2020.3.2
-		25BY63-00001A-Myellow	Counter balance	1	2.5T，使用2020.3.2
-	69108605	35BY63-00001-MRed	Counter balance	1	3.5T，取消2020.1.15
-	69140367	35BY63-00001A-MRed	Counter balance	1	3.5T，使用2020.3.2
-	69140365	35BY63-00001A-MGreen	Counter balance	1	3.5T，使用2020.3.2
-	69140366	35BY63-00001A-MOrange	Counter balance	1	3.5T，使用2020.3.2
-	69140368	35BY63-00001A-MYellow	Counter balance	1	3.5T，使用2020.3.2
12	69008447	M3036300002	Cap	2	
13	69041890	35B63-00002	Traction pin	1	
14	69140369	35BY63-01000	Gauze	1	使用2020.3.2
15	69000053	GB/T93-10	Washer 10	2	使用2020.3.2
16	69000125	GB/T5783-M10*25-8.8J	Bolt M10×25	2	使用2020.3.2
17	69005115	M3036300004	Washer	1	

图36/Fig36.

FD18T-C4WE3 FD18T-C4WV3 FD18T-C4W(6)3

FD25T-C4WE3 FD25T-C4WV3 FD25T-C4W(6)3

FD35T-C4WE3 FD35T-C4WV3 FD35T-C4W(6)3

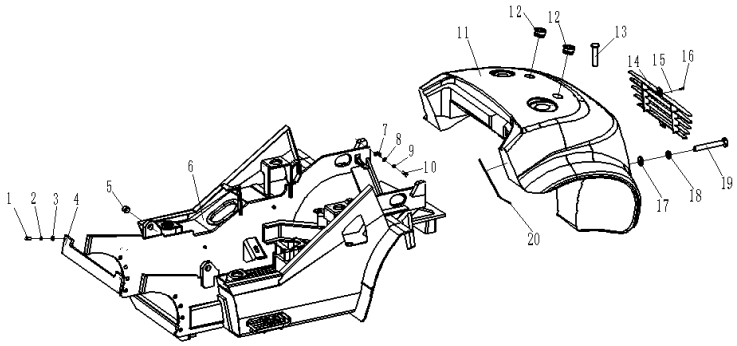

车架与平衡重/FRAME &COUNTERBALABCE WEIGHT

序号		代号	名称	数量	备注
Item No.		Part No.	Descripition	Q'ty	Remark
18	69000058	GB/T93-30	Washer 30	1	
19	69000196	GB/T5782-M30*200-8.8J	Bolt M30×200	1	
20		35BY63-00003	Sealing strip	2	

图37/Fig37.

FD18T-C4WE3 FD18T-C4WV3 FD18T-C4W(6)3

FD25T-C4WE3 FD25T-C4WV3 FD25T-C4W(6)3

FD35T-C4WE3 FD35T-C4WV3 FD35T-C4W(6)3

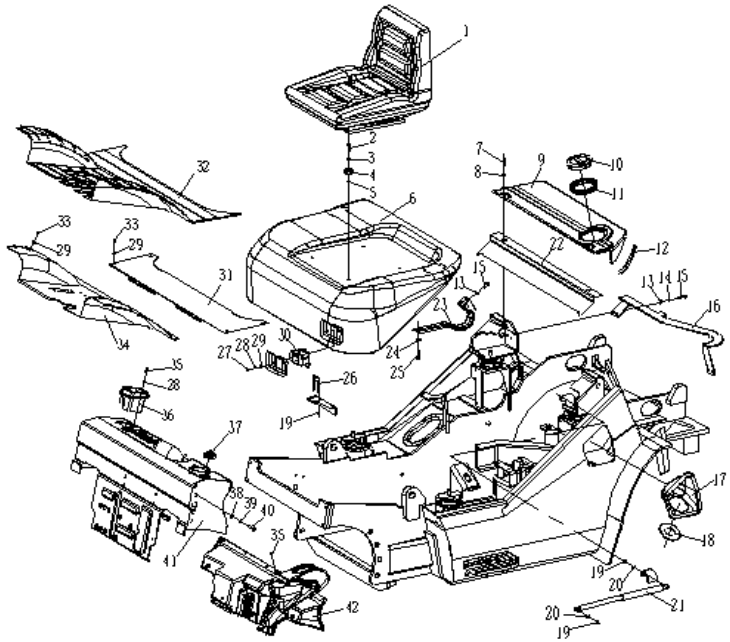

机罩、底板及座椅安装/HOOD,FLOOR & SEAT MOUNT

序号		代号	名称	数量	备注
Item No.		Part No.	Descripition	Q'ty	Remark
01	69053980	M3036800000-2	Seat	1	背可调.带双电锁
-	69064432	M3036800000-12	Seat	1	扶手.带双电锁.可折叠.格拉默
-	69092861	M3036800000-17	Seat	1	安全带.悬浮.折叠.双电锁.格拉默
-	69064001	M3036800000-22	Seat	1	背可调.带减震.双电锁.YHF-38
02	69142236	GB/T5782-M8*45	Bolt M8×45	4	
03	69000259	GB/T97.1-8	Washer 8	11	
04	69001992	M3032300002	Rubber danper	4	
05	69000292	GB/T889.1-M8-8J	Nut M8	4	
06	69036568	35B64-07000	Hood	1	
07	69001904	M3036408000	Radiator cover bolt	2	
08	69006706	GB/T96.1-10	Washer 10	2	
09	69041905	35B64-06000	Radiator cover	1	
10	69059488	35B64-00007	Rubber cap	1	
11	69059487	35B64-00006	Rubber danper	1	
12	69127362	A30464-00008	Seal stip	1	
13	69000062	GB/T93-8	Washer 8	16	
14	69000062	GB/T93-8	Washer 8	8	
15	69000309	GB/T5783-M8*16-8.8J	Bolt M8×16	16	
16	69130255	35B64-03000-Black	Plate	1	
17	69036572	A30464-00003	Oiling cover	1	
18	69036573	A30464-00004	Oiling cap	1	
19	69000112	GB/T6170-M8-8J	Nut M8	6	
20	69000062	GB/T93-8	Washer 8	8	
21	69036563	A30464-08000	Gas spring	1	
22	69059488	35B64-00007	Protection cover	1	

图37/Fig37.

FD18T-C4WE3 FD18T-C4WV3 FD18T-C4W(6)3

FD25T-C4WE3 FD25T-C4WV3 FD25T-C4W(6)3

FD35T-C4WE3 FD35T-C4WV3 FD35T-C4W(6)3

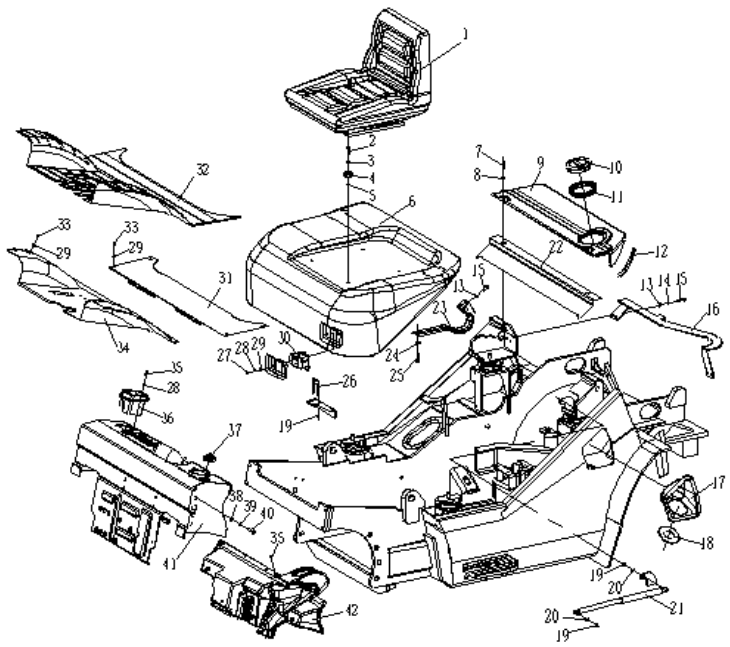

机罩、底板及座椅安装/HOOD,FLOOR & SEAT MOUNT

序号		代号	名称	数量	备注
Item No.		Part No.	Descripition	Q'ty	Remark
23	N/A	35B64-02000	Hinge ass'y	2	
-	69080098	35B64-02001A	Hinge	2	
-	69036631	A30464-05002	Bolt	2	
-	69047480	35B64-02100	Stents	2	
24	69000053	GB/T93-10	Washer 10	4	
25	69000123	GB/T5783-M10*20-8.8J	Bolt M10×20	4	
26	69046276	35B64-00004	Hood hook	1	
27	69039750	GB/T823-M6*16-4.8J	Screw M6×16	24	
28	69000060	GB/T93-6	Washer 6	24	
29	69000258	GB/T97.1-6	Washer 6	26	
30	69036567	A30464-09000	Hood lock	1	
31	69041904	35B64-05000	Rear floor board	1	1.8-2.5T
32	69041900	35B64-00001	Robber mat	1	
33	69022768	GB/T818-M8*16	Screw M8×16	8	2017.04.13改
34	69071608	25BY64-02000	Front floor board	1	洋马、S4S
-	69089691	25BY64LF-01000	Front floor board	1	D04EG
35	69000102	GB/T818-M6*12-4.8J	Screw M6×12	20	
36	69004375	M3036400004	Cup holder	1	
37	69071607	25BY64-00001	Rubber cap	1	
38	69000054	GB/T93-12	Washer 12	4	
39	69000251	GB/T97.1-12	Washer 12	4	
40	69000144	GB/T5783-M12*20-8.8J	Bolt M12×20	4	
41	69133274	25BY64-01000-Black	Display pracket	1	
42	69071605	25BY64-03000	Cover	1	
43	69106258	U3046400002	Rubber ring	1	

图38/Fig38.

蓄电池及安装/START BATTERY MOUNT

FD18T-C4WE3 FD18T-C4WV3 FD18T-C4W(6)3

FD25T-C4WE3 FD25T-C4WV3 FD25T-C4W(6)3

FD35T-C4WE3 FD35T-C4WV3 FD35T-C4W(6)3

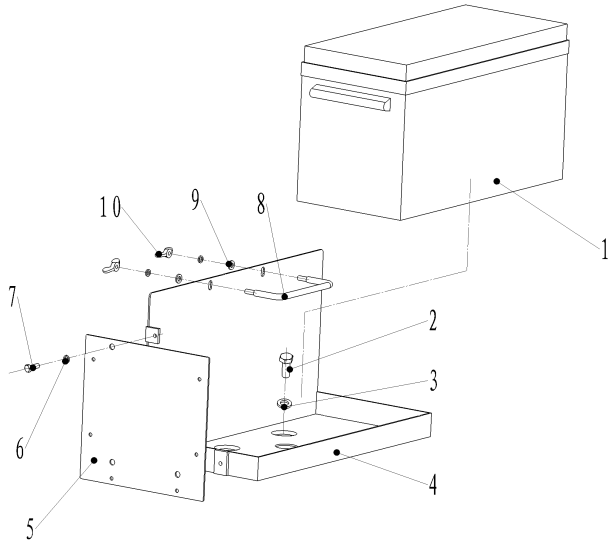

序号		代号	名称	数量	备注
Item No.		Part No.	Descripition	Q'ty	Remark
01	69002553	M30314A02000	Start battary	1	
-	69034012	M30314A02000-G	Start battary (cold protection)	1	
02	69000309	GB/T5783-M8*16-8.8J	Bolt M8×16	4	
03	69000085	GB/T96.1-8	Washer 8	4	
04	69023124	30314M-01000	Start battary seat(diesel)	1	
05	69034311	A30414-00001	Electrical box seat	1	4TNE98、S4S
-	69090875	25BY14LF-00001	Electrical box seat	1	D04EG
06	69000060	GB/T93-6	Washer 6	5	
07	69000189	GB/T5783-M6*12-8.8J	Bolt M6×12	3	
08	69023123	30314M-00001A	Battary fixed lever	1	
09	69000258	GB/T97.1-6	Washer 6	2	
10	69000077	GB62-M6	Nut M6	2	

图39/Fig39.

FD18T-C4WE3 FD18T-C4WV3 FD18T-C4W(6)3

FD25T-C4WE3 FD25T-C4WV3 FD25T-C4W(6)3

FD35T-C4WE3 FD35T-C4WV3 FD35T-C4W(6)3

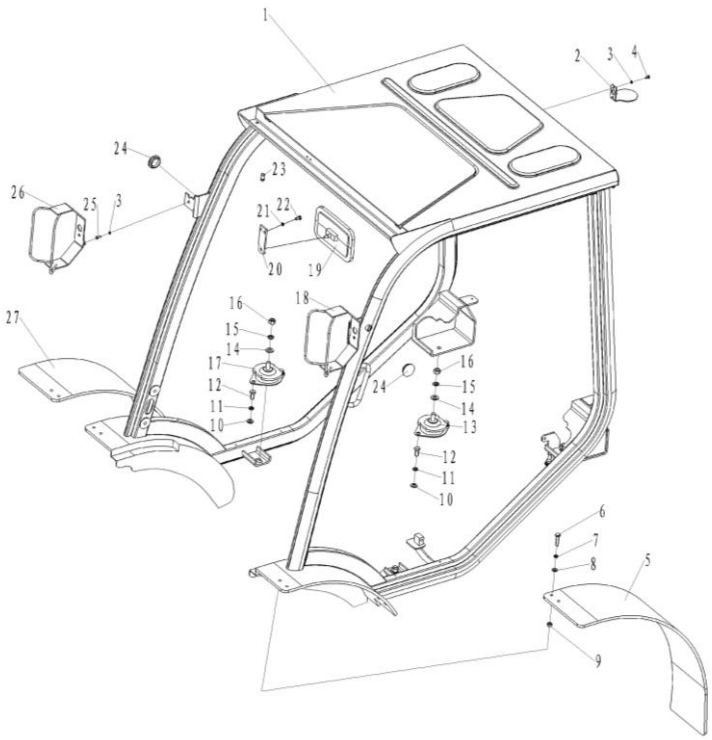

护顶架/OVERHEAD GUARD

序号		代号	名称	数量	备注
Item No.		Part No.	Descripition	Q'ty	Remark
1	69103348	25BY51-01000-Black	Overhead guard ass'y	1	1.8-2.5T
-	69116867	35B51-01000-Black	Overhead guard ass'y	1	3.5T
2	69086990	30351M-00002A	Caution light seat	1	
3	69000060	GB/T93-6	Washer 6	4	
4	69000189	GB/T5783-M6*12-8.8J	Bolt M6×12	2	
5	69128563	25BY51-00002-Mred	Fender(left)	1	1.8-2.5T
-	69128564	25BY51-00002-MGreen	Fender(left)	1	1.8-2.5T
-	69128559	25BY51-00002-MOrange	Fender(left)	1	1.8-2.5T
-	69128561	25BY51-00002-MYellow	Fender(left)	1	1.8-2.5T
-	69128519	35B51-00002-Mred	Fender(left)	1	3.5T
-	69128520	35B51-00002-MGreen	Fender(left)	1	3.5T
-	69128518	35B51-00002-MOrange	Fender(left)	1	3.5T
-	69128517	35B51-00002-MYellow	Fender(left)	1	3.5T
6	69000132	GB/T5783-M10*40-8.8J	Bolt M10×40	8	
7	69000053	GB/T93-10	Washer 10	8	
8	69000250	GB/T97.1-10	Washer 10	8	
9	69000103	GB/T6170-M10-8J	Nut M10	8	
10	69000251	GB/T97.1-12	Washer 12	8	
11	69000054	GB/T93-12	Washer 12	8	
12	69000002	GB/T5783-M12*25-8.8J	Bolt M12×25	8	
13	69033868	A30451-05000	Rubber damperⅡ	2	
14	69000252	GB/T97.1-14	Washer14	4	
15	69005111	GB/T93-14	Washer14	4	
16	69000316	GB/T6171-M14*1.5-8J	Nut M14×1.5	4	
17	69033867	A30451-04000	Rubber damperⅠ	2	

图39/Fig39.

FD18T-C4WE3 FD18T-C4WV3 FD18T-C4W(6)3

FD25T-C4WE3 FD25T-C4WV3 FD25T-C4W(6)3

FD35T-C4WE3 FD35T-C4WV3 FD35T-C4W(6)3

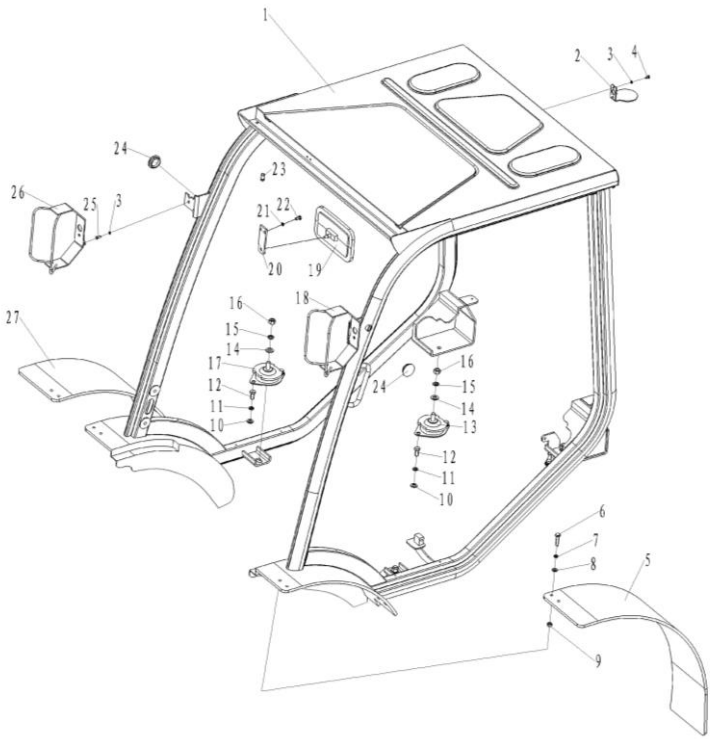

护顶架/OVERHEAD GUARD

序号		代号	名称	数量	备注
Item No.		Part No.	Descripition	Q'ty	Remark
18	69060041	A30451-02000A	Light bracket(left)	1	
19	69005400	A15Q51-00001	Rearview mirror ass'y	1	
20	69036498	A30451-00002A	Rearview mirror bracket	1	
21	69000062	GB/T93-8	Washer 8	2	
22	69000309	GB/T5783-M8*16-8.8J	Bolt M8×16	2	
23	69067261	A30451-00003	Hose Φ12×1-1600	1	2017.06.01删除
24	69001764	M3036400007	Rubber cap	2	
25	69000190	GB/T5783-M6*16-8.8J	Bolt M6×16	2	
26	69060042	A30451-03000A	Light bracket(right)	1	
27	69128556	25BY51-00001-MRed	Fender(right)	1	1.8-2.5T
-	69128555	25BY51-00001-MGreen	Fender(right)	1	1.8-2.5T
-	69128558	25BY51-00001-MOrange	Fender(right)	1	1.8-2.5T
-	69128557	25BY51-00001-MYellow	Fender(right)	1	1.8-2.5T
-	69128514	35B51-00001-MRed	Fender(right)	1	3.5T
-	69128513	35B51-00001-MGreen	Fender(right)	1	3.5T
-	69128516	35B51-00001-MOrange	Fender(right)	1	3.5T
-	69128515	35B51-00001-MYellow	Fender(right)	1	3.5T

图40/Fig40.

工作油箱装置及安装/HYDRAULIC OIL TANK MOUNT

FD18T-C4WE3 FD18T-C4WV3 FD18T-C4W(6)3

FD25T-C4WE3 FD25T-C4WV3 FD25T-C4W(6)3

FD35T-C4WE3 FD35T-C4WV3 FD35T-C4W(6)3

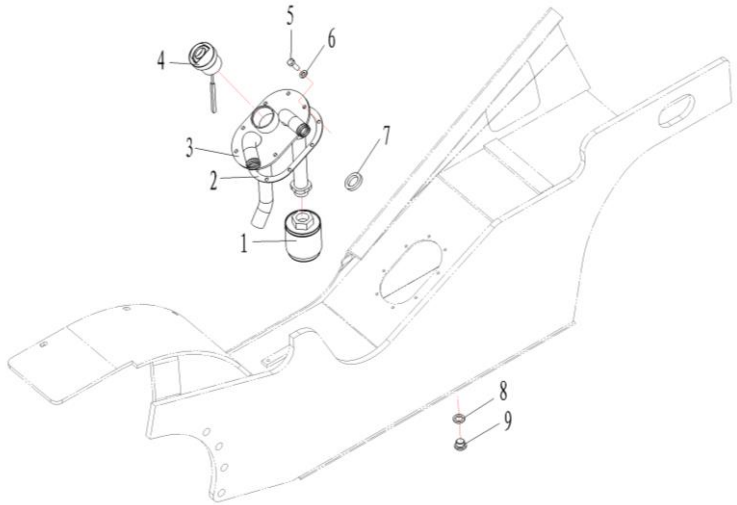

序号		代号	名称	数量	备注
Item No.		Part No.	Descripition	Q'ty	Remark
01	69001923	M3037503000	Hydraulic filter Y0809B	1	
02	69000679	M3032200007	Cover gasket	1	
03	69036881	A30475-01000	Cover plate ass'y	1	4TNE98
-	69083033	25BY75LS-00000	Cover plate ass'y	1	S4S、D04EG
04	69034258	A30475-02000	Oiling cap	1	
05	69000309	GB/T5783-M8*16-8.8J	Bolt M8×16	8	
06	69000062	GB/T93-8	Washer 8	8	
07	69035702	M3032200003	Magnet	1	
08	69000357	JB/T982-20	Washer 20	1	
09	69003910	M3032200002	Drain plug	1	

图41/Fig41.

FD18T-C4WE3 FD18T-C4WV3 FD18T-C4W(6)3

FD25T-C4WE3 FD25T-C4WV3 FD25T-C4W(6)3

FD35T-C4WE3 FD35T-C4WV3 FD35T-C4W(6)3

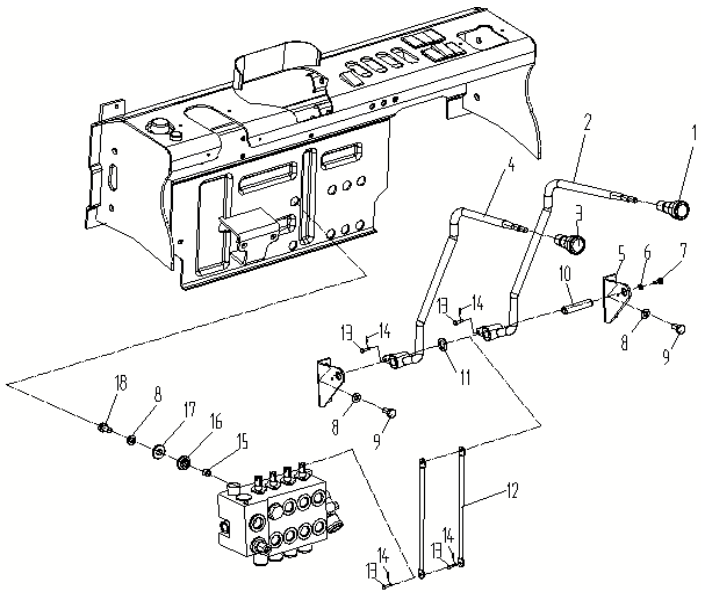

多路换向阀操纵(二联) /MULTI-WAY VALVE MOUNT(TWO-THROW)

序号		代号	名称	数量	备注
Item No.		Part No.	Descripition	Q'ty	Remark
01	69089160	M3037400006A	Lift konb	1	
02	69041892	35B74-01000	Lift lever	1	
03	69089161	M3037400007A	Tilt knob	1	
04	69041893	35B74-02000	Tilt lever	1	
05	69080585	A30474-00003A	Bracket	2	
06	69000060	GB/T93-6	Washer 6	1	
07	69000189	GB/T5783-M6*12-8.8J	Bolt M6×12	1	
08	69000053	GB/T93-10	Washer 10	7	
09	69000123	GB/T5783-M10*20-8.8J	Bolt M10×20	4	
10	69001622	M3037406000	Two way valve pin shaft	1	
11	69011791	M2577400003 (3MM)	Multi-way valve	按需	
12	69001759	M2037400003	Connecting rod	2	
13	69000322	M3037400001	Pin shaft	4	
14	69000088	GB/T91-2*12	Pin 2×12	4	
15	69034263	A30474-00002	Collar	3	
16	69034262	A30474-00001	Rubber danper	6	
17	69006706	GB/T96.1-10	Washer 10	3	
18	69011886	GB/T5786-M10*1.25*25	Bolt M10×1.25×25	3	

图42/Fig42.

多路换向阀操纵(三联)/MULTI-WAY VALVE MOUNT(THREE-THROW)

FD18T-C4WE3 FD18T-C4WV3 FD18T-C4W(6)3

FD25T-C4WE3 FD25T-C4WV3 FD25T-C4W(6)3

FD35T-C4WE3 FD35T-C4WV3 FD35T-C4W(6)3

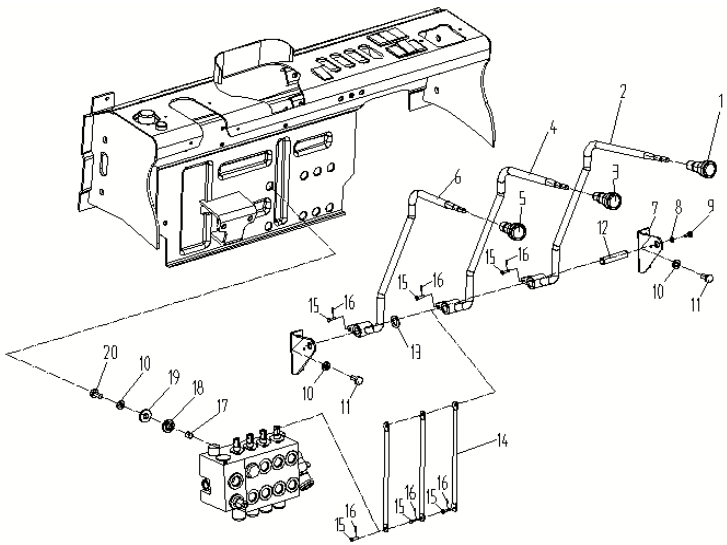

序号		代号	名称	数量	备注
Item No.		Part No.	Descripition	Q'ty	Remark
01	69089162	M3037400008A	4th way valve knob	1	
02	69041894	35B74-03000	3rd way valve lever	1	
03	69089160	M3037400006A	Lift konb	1	
04	69041892	35B74-01000	Lift lever	1	
05	69089161	M3037400007A	Tilt knob	1	
06	69041893	35B74-02000	Tilt lever	1	
07	69080585	A30474-00003A	Bracket	2	
08	69000060	GB/T93-6	Washer 6	1	
09	69000189	GB/T5783-M6*12-8.8J	Bolt M6×12	1	
10	69000053	GB/T93-10	Washer 10	7	
11	69000123	GB/T5783-M10*20-8.8J	Bolt M10×20	4	
12	69001623	M3037408000	Three way valve pin shaft	1	
13	69011791	M2577400003 (3MM)	Multi-way valve	按需	
14	69001759	M2037400003	Connecting rod	3	
15	69000322	M3037400001	Pin shaft	6	
16	69000088	GB/T91-2*12	Pin 2×12	6	
17	69034263	A30474-00002	Collar	3	
18	69034262	A30474-00001	Rubber danper	6	
19	69006706	GB/T96.1-10	Washer 10	3	
20	69011886	GB/T5786-M10*1.25*25	Bolt M10×1.25×25	3	

图43/Fig43.

多路换向阀操纵(四联)/MULTI-WAY VALVE MOUNTE(FOUR-THROW)

FD18T-C4WE3 FD18T-C4WV3 FD18T-C4W(6)3

FD25T-C4WE3 FD25T-C4WV3 FD25T-C4W(6)3

FD35T-C4WE3 FD35T-C4WV3 FD35T-C4W(6)3

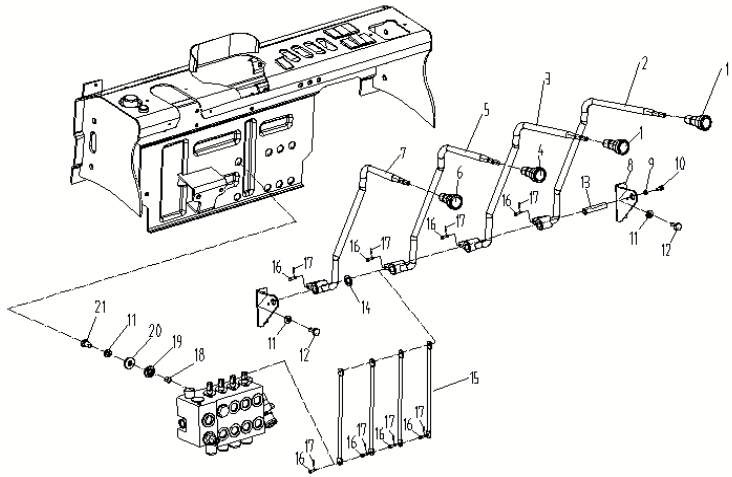

序号		代号	名称	数量	备注
Item No.		Part No.	Descripition	Q'ty	Remark
01	69089162	M3037400008A	4th way valve knob	2	
02	69041895	35B74-04000	4th way valve lever	1	
03	69041894	35B74-03000	3rd way valve lever	1	
04	69089160	M3037400006A	Lift konb	1	
05	69041892	35B74-01000	Lift lever	1	
06	69089161	M3037400007A	Tilt knob	1	
07	69041893	35B74-02000	Tilt lever	1	
08	69080585	A30474-00003A	Bracket	2	
09	69000060	GB/T93-6	Washer 6	1	
10	69000189	GB/T5783-M6*12-8.8J	Bolt M6×12	1	
11	69000053	GB/T93-10	Washer 10	7	
12	69000123	GB/T5783-M10*20-8.8J	Bolt M10×20	4	
13	69005601	M3037410000	four-way value pin shaft	1	
14	69011791	M2577400003 (3MM)	Multi-way valve	按需	
15	69001759	M2037400003	Connecting rod	4	
16	69000322	M3037400001	Pin shaft	8	
17	69000088	GB/T91-2*12	Pin 2×12	8	
18	69034263	A30474-00002	Collar	3	
19	69034262	A30474-00001	Rubber danper	6	
20	69006706	GB/T96.1-10	Washer 10	3	
21	69011886	GB/T5786-M10*1.25*25	Bolt M10×1.25×25	3	

图44/Fig44.

FD18T-C4WE3 FD18T-C4WV3 FD18T-C4W(6)3

FD25T-C4WE3 FD25T-C4WV3 FD25T-C4W(6)3

FD35T-C4WE3 FD35T-C4WV3 FD35T-C4W(6)3

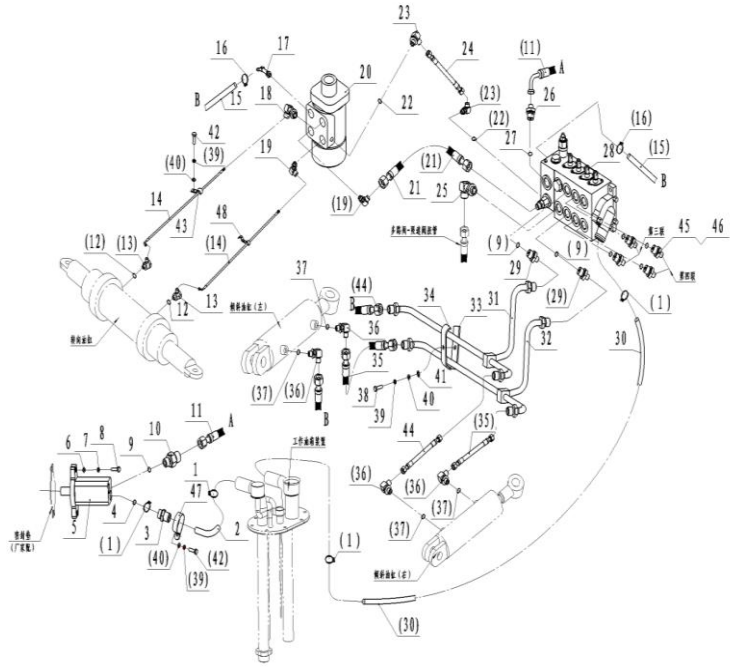

液压系统/HYDRAULIC SYSTEM

序号 Item No.	物料ID. ID.	代号 Part No.	名称 Descripition	数量 Q'ty	备注 Remark
A	N/A	-	Hydraulic system	1	
01	69052895	JB/T8870-32-44	Hoop Φ32-44	4	
02	69041920	35B76-00001	Pump suction pipe	1	洋马
-	69083032	25BY76-01001A	Pump suction pipe	1	S4S、D04EG
03	69001280	M3037600005	Pump suction fitting	1	
04	69124133	GB1235-35*3.5-G	O-ring 35×3.5	1	
05	69038406	A30476-05100	Gear pump	1	洋马
-	69059546	A30476-05400	Gear pump	1	S4S、D04EG
06	69000250	GB/T97.1-10	Washer 10	2	
07	69000053	GB/T93-10	Washer 10	2	
08	69000130	GB/T5783-M10*35-8.8J	Bolt M10×35	2	
09	69124131	GB1235-22*2.4-G	O-ring 22×2.4	3	
10	69001278	M3037600004	Pump outlet fitting	1	
11	69001293	M3037612001	Valve H.P.hose	1	2013.11.29后
12	69000356	JB/T982-18	Combination washer 18	2	
13	69001418	MS1677601000	Steering cylinder connector	2	
14	69017072	30386S-01005	Pulley H.P. hose	2	
15	69106447	LS106447	Orbitrol pipe	1	
16	69022337	JB/T8870-20-32	Hoop Φ20-32	2	
17	69001503	M3037607000	Orbitrol pipe connector	1	
18	69035710	A30476-01000	Orbitrol conector Ⅰ	1	
-	69064780	A25776-02000	Orbitrol conector Ⅱ	2	
19	69093993	25D76X-05000	Orbitrol	1	1.8t(2019.7.19前)
-	69133063	25D76X-05000A	Orbitrol	1	1.8t(2019.7.19后)

图44/Fig44.

FD18T-C4WE3 FD18T-C4WV3 FD18T-C4W(6)3

FD25T-C4WE3 FD25T-C4WV3 FD25T-C4W(6)3

FD35T-C4WE3 FD35T-C4WV3 FD35T-C4W(6)3

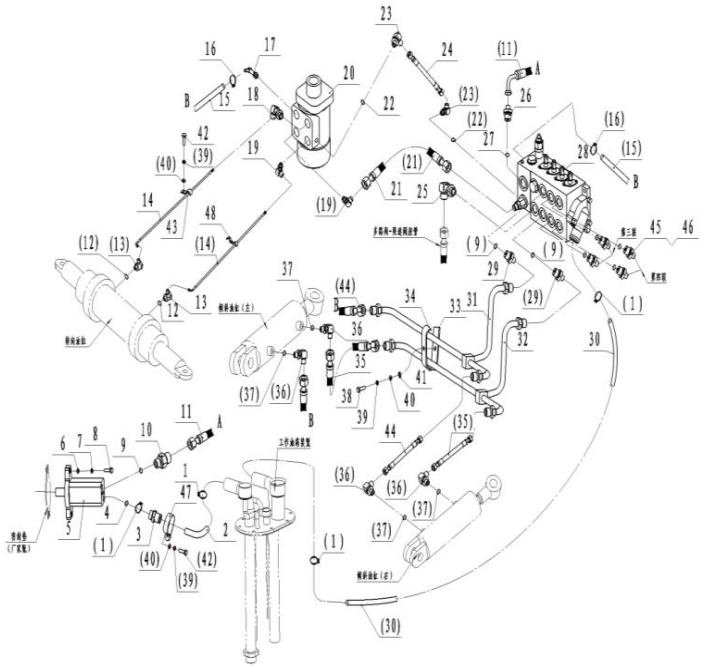

液压系统/HYDRAULIC SYSTEM

序号 Item No.	物料ID. ID.	代号 Part No.	名称 Descripition	数量 Q'ty	备注 Remark
A	N/A	-	Hydraulic system	1	
21	69041924	35B76-00004	Orbitrol H.P. hose	1	
22	69134087	GB/T3452.1-8.5*2.65-G	O-ring 8.5×2.65	2	
23	69035500	25D76X-06000	Sensor connector	2	
24	69006042	15Q88S-00007	Pulley H.P. hose Ⅰ	1	
25	69003278	M3037601000	Value connector(left) cylinder	1	
26	69001295	M3037603000	Value inlet connector	1	
27	69022457	GB/T1235-24*2.4	O-ring 24×2.4	1	
28	69075601	18B76-01100	Multi-way valve	1	1.8t；二联
-	69076026	18B76-01200	Multi-way valve	1	1.8t；三联
-	69076027	18B76-01300	Multi-way valve	1	1.8t；四联
-	69027949	25D76X-02100	Multi-way valve	1	2.5t、3.5t；二联
-	69027950	25D76X-02200	Multi-way valve	1	2.5t、3.5t；三联
-	69027951	25D76X-02300	Multi-way valve	1	2.5t、3.5t；四联
29	69001303	M3037600012	Value connector(tiltiner cylinder)	2	
30	69041926	35B76-00005	Return oil hose	1	
31	69041928	35B76-01000	Tilt cylinder pipe Ⅰ	1	
32	69041929	35B76-02000	Tilt cylinder pipeⅡ	1	
33	69003286	M2037600001	Clip Ⅰ	1	
34	69003446	M2037600002	ClipⅡ	1	
35	69001490	M3037600008	Pulley H.P. hose(front)	2	
36	69003277	M3037602000	Tilt cylinder connector	4	
37	69123707	GB1235-11.2*2.4-G	O-ring 11.2*2.4	4	
38	69000194	GB/T5783-M6*25-8.8J	Bolt M6×25	1	
39	69000060	GB/T93-6	Washer 6	4	

图44/Fig44.

FD18T-C4WE3 FD18T-C4WV3 FD18T-C4W(6)3

FD25T-C4WE3 FD25T-C4WV3 FD25T-C4W(6)3

FD35T-C4WE3 FD35T-C4WV3 FD35T-C4W(6)3

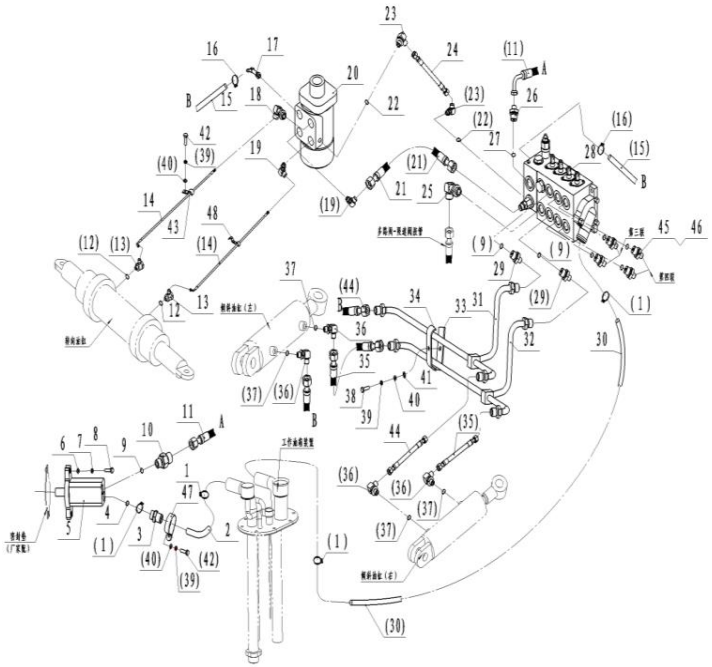

液压系统/HYDRAULIC SYSTEM

序号 Item No.	物料ID. ID.	代号 Part No.	名称 Descripition	数量 Q'ty	备注 Remark
A	N/A	-	Hydraulic system	1	
40	69000258	GB/T97.1-6	Washer 6	4	
41	69000111	GB/T6170-M6-8J	Nut M6	1	
42	69000189	GB/T5783-M6*12-8.8J	Bolt M6×12	3	
43	69036938	10A36Q-00002	Clip	6	
44	69001320	M2577600012	Pulley H.P. hose(front)	2	
45	69001504	M3037600021	Connector	2	三联
46	69001504	M3037600021	Connector	4	四联
47	69061179	GMS-DJR45	Clamp	3	
48	69003286	M2037600001	Hard tube clamp Ⅰ	1	

图45/Fig45.

变矩器油冷系统/TOR-CON OIL COOLING SYSTEM

FD18T-C4WE3	FD18T-C4WV3	FD18T-C4W(6)3
FD25T-C4WE3	FD25T-C4WV3	FD25T-C4W(6)3
FD35T-C4WE3	FD35T-C4WV3	FD35T-C4W(6)3

序号		代号	名称	数量	备注
Item No.		Part No.	Descripition	Q'ty	Remark
A	N/A	N/A	tor-con oil cooling system	1	
01	69036894	JB/T8870-16-25	Hoop d16-25	4	
02	N/A	35B47-00002	Tor-con hose Φ11×5-1700	1	用69036925剪
03	N/A	35B47-00001	Tor-con hose Φ11×5-1500	1	用69036925剪
04	69036938	10A36Q-00002	Clip	2	
05	69000258	GB/T97.1-6	Washer 6	2	
06	69000060	GB/T93-6	Washer 6	2	
07	69000189	GB/T5783-M6*12-8.8J	Bolt M6×12	2	

图46/Fig46.

门架管路系统(基本型二联)/MAST HYDRAULIC SYSTEM(NORMAL MAST Two-THROW)

FD18T-C4WE3	FD18T-C4WV3	FD18T-C4W(6)3
FD25T-C4WE3	FD25T-C4WV3	FD25T-C4W(6)3
FD35T-C4WE3	FD35T-C4WV3	FD35T-C4W(6)3

序号	物料ID.	代号	名称	数量	备注
Item No.	ID.	Part No.	Descripition	Q'ty	Remark
A	N/A	-	Mast hydraulic system	1	
01	69001400	16886-00001	Flow regulator H.P. hose	1	
02	69002918	15386-01000	Flow regulator	1	1.8t
-	69002920	20386-01000	Flow regulator	1	2.5t
-	69002922	30386-03000	Flow regulator	1	3.5t
04	69022457	GB/T1235-24*2.4	O-ring 24×2.4	1	
03	69124142	GB/T3452.1-17*2.65-G	O-ring 17×2.65	1	
05	69016646	30386-01000	Lift cylinder tee connector	1	1.8t
06	69009659	45486-00002	H.P.hose	1	
-	69005977	20388-00002	H.P.hose	1	2.5t、3.5t

图47/Fig47.

门架管路系统(基本型三联)/MAST HYDRAULIC SYSTEM(NORMAL MAST Three-THROW)

FD18T-C4WE3	FD18T-C4WV3	FD18T-C4W(6)3
FD25T-C4WE3	FD25T-C4WV3	FD25T-C4W(6)3
FD35T-C4WE3	FD35T-C4WV3	FD35T-C4W(6)3

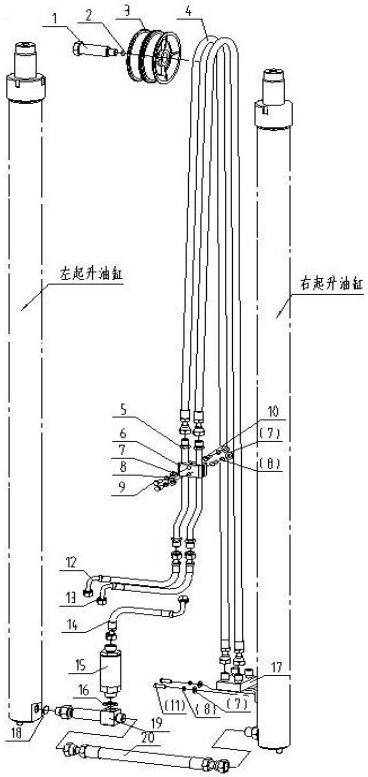

序号	物料ID.	代号	名称	数量	备注
Item No.	ID.	Part No.	Descripition	Q'ty	Remark
A	N/A	-	Mast hydraulic system	1	
01	69016660	30386S-00003	Step Bolt	1	
02	69000579	30386S-00004(8)	Sleeve	3	
03	69016659	30386S-00002	Pulley	2	
04	N/A	30386S-01000	Pulley H.P. hose	2	1.8t
-	N/A	20B86S-01000	Pulley H.P. hose	2	2.5t
-	N/A	35B86S-01000	Pulley H.P. hose	2	3.5t
05	69016675	30386S-02000	Adguesting pipe	2	
06	69066451	30386S-00001/A	Clip Plate	1	
-	69066450	30386S-00001/B	Clip Plate	1	
07	69000259	GB/T97.1-8	Washer 8	6	
08	69000062	GB/T93-8	Washer 8	6	
09	69000309	GB/T5783-M8*16-8.8J	Bolt M8×30	2	
10	69000200	GB/T5783-M8*25-8.8J	Bolt M8×25	2	
11	69000203	GB/T5783-M8*30-8.8J	Bolt M8×16	2	
12	69018460	20386SS-00001	Adguesting H.P.hose Ⅰ	1	
13	69018461	20386SS-00002	Adguesting H.P.hose Ⅱ	1	
14	69001400	16886-00001	Flow regulator H.P. hose	1	
15	69002918	15386-01000	Flow regulator	1	1.8t
-	69002920	20386-01000	Flow regulator	1	2.5t
-	69002922	30386-03000	Flow regulator	1	3.5t
16	69022457	GB/T1235-24*2.4	O-ring 24×2.4	1	
17	69064637	A25786S-02000	Cross connector	1	1.8t
-	69012313	30386S-03000	Cross connector Ⅰ	1	2.5t
-	69020958	35386S-02000	Cross connector	1	3.5t

图47/Fig47.

门架管路系统(基本型三联)/MAST HYDRAULIC SYSTEM(NORMAL MAST Three-THROW)

FD18T-C4WE3 FD18T-C4WV3 FD18T-C4W(6)3

FD25T-C4WE3 FD25T-C4WV3 FD25T-C4W(6)3

FD35T-C4WE3 FD35T-C4WV3 FD35T-C4W(6)3

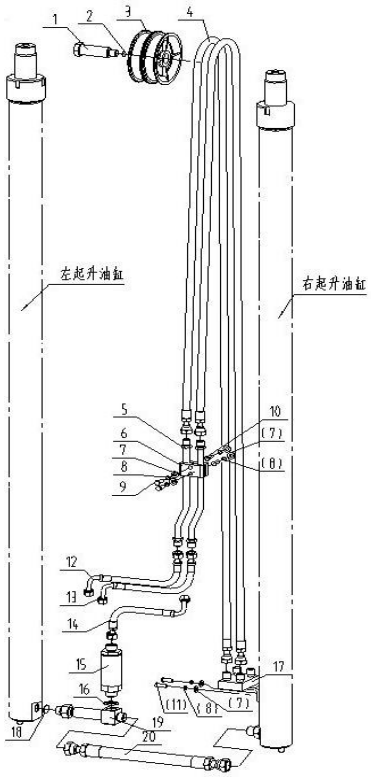

序号	物料ID.	代号	名称	数量	备注
Item No.	ID.	Part No.	Descripition	Q'ty	Remark
A	N/A	-	Mast hydraulic system	1	
18	69124142	GB/T3452.1-17*2.65-G	O-ring 17x2.65	1	
19	69016646	30386-01000	Lift cylinder tee connector	1	
20	69001331	30386-00001	H.P.hose	1	1.8t
-	69005977	20388-00002	H.P.hose	1	2.5t
-	69009659	45486-00002	H.P.hose	1	3.5t

图47/Fig47.

门架管路系统(基本型三联)/MAST HYDRAULIC SYSTEM(NORMAL MAST Three-THROW)

FD18T-C4WE3 FD18T-C4WV3 FD18T-C4W(6)3

FD25T-C4WE3 FD25T-C4WV3 FD25T-C4W(6)3

FD35T-C4WE3 FD35T-C4WV3 FD35T-C4W(6)3

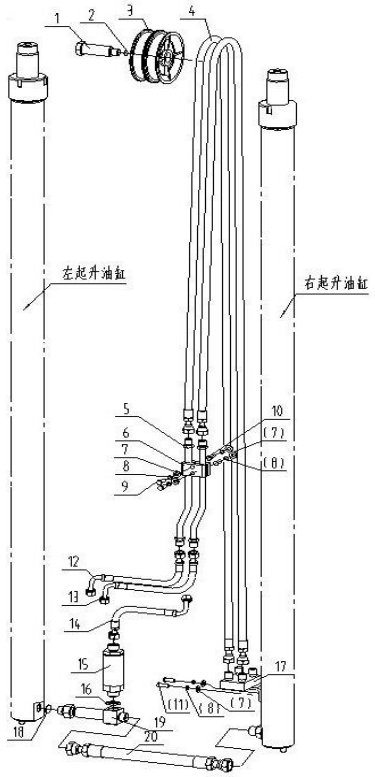

管路系统选用件-侧移胶管(件4)
Sway hose Optional Parts

起升高度 LIFTING HEIGHT	1.8t		2.5t	备注 REMARK
	ID.	30386S-01000 PLASTIC HOSE	ID.	
2700	69016786	30388S-02004	69017072	
3000	69016629	20388S-01007	69016889	标准
3300	69016650	30386S-01008	69017032	
3500	69016651	30386S-01009	69016892	
3700	69016652	30386S-01011	69017075	
4000	69016653	30386S-01013	69016653	
4500	69016654	30386S-01015	69016654	
5000	69016655	30386S-01017	-	
5500	69016656	30386S-01018	-	
6000	69016657	30386S-01019	-	

图47/Fig47.

门架管路系统(基本型三联)/MAST HYDRAULIC SYSTEM(NORMAL MAST Three-THROW)

FD18T-C4WE3 FD18T-C4WV3 FD18T-C4W(6)3

FD25T-C4WE3 FD25T-C4WV3 FD25T-C4W(6)3

FD35T-C4WE3 FD35T-C4WV3 FD35T-C4W(6)3

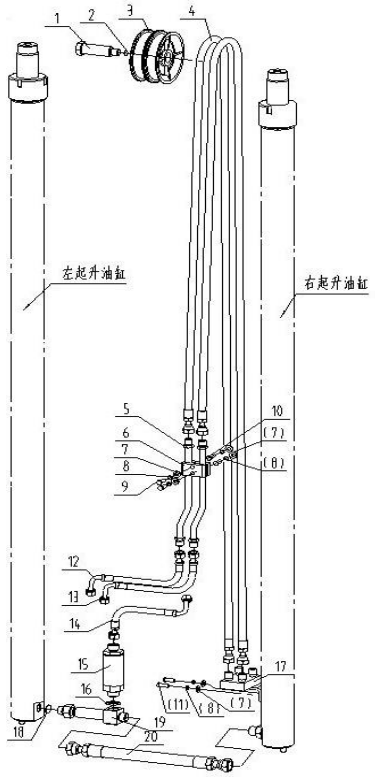

管路系统选用件-侧移胶管(件4)
Sway hose Optional Parts

起升高度 LIFTING HEIGHT	3.5t			备注 REMARK
	ID.	35B86S-01000 PLASTIC HOSE		
2700	69016643	20388SS-01009		
3000	69013017	30387S-02011		
3300	69016793	30388S-02010		
3500	69017074	30386S-01010		
3700	69016780	30388S-01008		
4000	69016895	35388S-01009		标准
4500	69018313	35386S-01015		
5000	-	-		
5500	-	-		
6000	-	-		

图48/Fig48.

门架管路系统(基本型四联)/MAST HYDRAULIC SYSTEM(NORMAL MAST Four-THROW)

FD18T-C4WE3 FD18T-C4WV3 FD18T-C4W(6)3

FD25T-C4WE3 FD25T-C4WV3 FD25T-C4W(6)3

FD35T-C4WE3 FD35T-C4WV3 FD35T-C4W(6)3

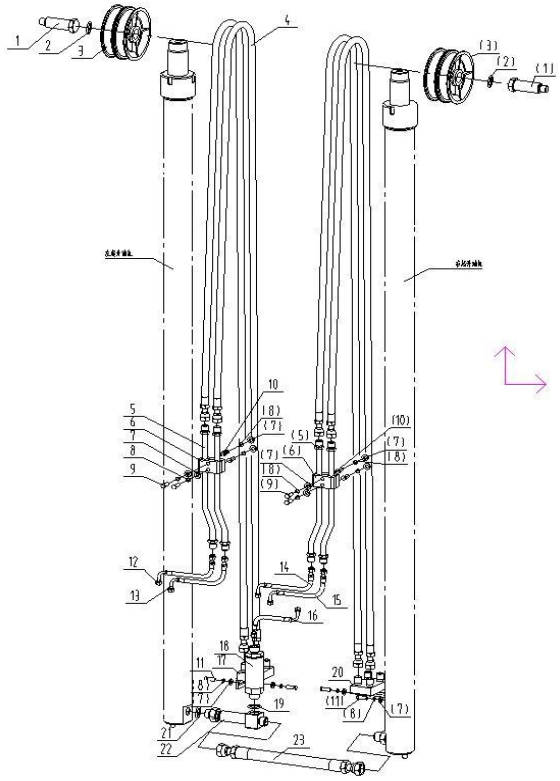

序号	物料ID.	代号	名称	数量	备注
Item No.	ID.	Part No.	Descripition	Q'ty	Remark
A	N/A	-	Mast hydraulic system	1	
01	69016660	30386S-00003	Step Bolt	2	
02	69000579	30386S-00004(8)	Sleeve	6	
03	69016659	30386S-00002	Pulley	4	
04	N/A	30386S-01000	Pulley H.P. hose	4	1.8t
-	N/A	20B86S-01000	Pulley H.P. hose	4	2.5t
-	N/A	35B86S-01000	Pulley H.P. hose	4	3.5t
05	69016675	30386S-02000	Adguesting pipe	4	
06	69066451	30386S-00001/A	Clip Plate	2	
-	69066450	30386S-00001/B	Clip Plate	2	
07	69000259	GB/T97.1-8	Washer 8	12	
08	69000062	GB/T93-8	Washer 8	12	
09	69000203	GB/T5783-M8*30-8.8J	Bolt M8×30	4	
10	69000200	GB/T5783-M8*25-8.8J	Bolt M8×25	4	
11	69000309	GB/T5783-M8*16-8.8J	Bolt M8×16	4	
12	69016682	30386SS-00002	Adguesting H.P.hose Ⅱ	1	
13	69016680	30386SS-00001	Adguesting H.P.hose Ⅰ	1	
14	69018461	20386SS-00002	Adguesting H.P.hose Ⅱ	1	
15	69018460	20386SS-00001	Adguesting H.P.hose Ⅰ	1	
16	69001400	16886-00001	Flow regulator H.P. hose	1	
17	69064697	A25786SS-02000	Cross connector	1	1.8t
-	69012312	30386SS-01000	Cross connectorⅡ	1	2.5t
-	69020959	35386SS-01000	Cross connector	1	3.5t
18	69002918	15386-01000	Flow regulator	1	1.8t
-	69002920	20386-01000	Flow regulator	1	2.5t

图48/Fig48.

FD18T-C4WE3 FD18T-C4WV3 FD18T-C4W(6)3

FD25T-C4WE3 FD25T-C4WV3 FD25T-C4W(6)3

FD35T-C4WE3 FD35T-C4WV3 FD35T-C4W(6)3

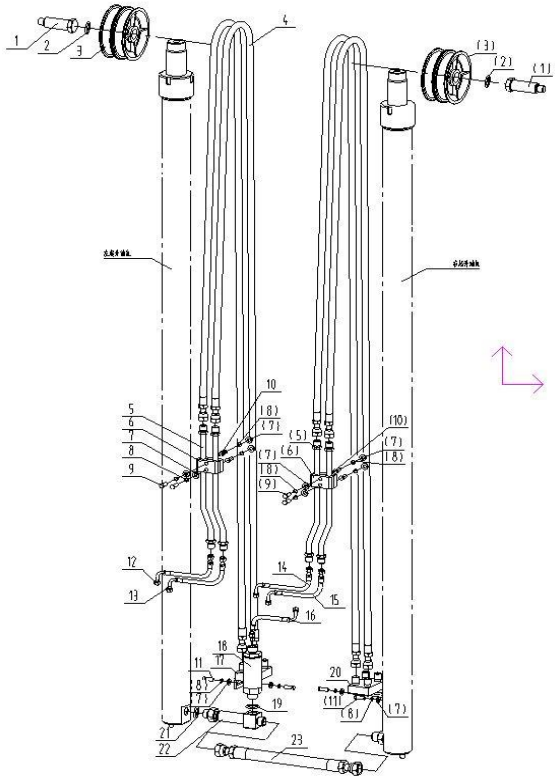

门架管路系统(基本型四联)/MAST HYDRAULIC SYSTEM(NORMAL MAST Four-THROW)

序号	物料ID.	代号	名称	数量	备注
Item No.	ID.	Part No.	Descripition	Q'ty	Remark
A	N/A	-	Mast hydraulic system	1	
-	69002922	30386-03000	Flow regulator	1	3.5t
19	69022457	GB/T1235-24*2.4	O-ring 24×2.4	1	
20	69064637	A25786S-02000	Cross connector	1	1.8t
-	69012313	30386S-03000	Cross connector Ⅰ	1	2.5t
-	69020958	35386S-02000	Cross connector	1	3.5t
21	69124142	GB/T3452.1-17*2.65-G	O-ring 17×2.65	1	
22	69016646	30386-01000	Lift cylinder tee connector	1	
23	69001331	30386-00001	H.P.hose	1	1.8t
-	69005977	20388-00002	H.P.hose	1	2.5t
-	69009659	45486-00002	H.P.hose		3.5t

图49/Fig49. 门架管路系统(二级全自由二联)/ MAST HYDRAULIC SYSTEM(FULL FREE 2-STAGE MAST Two-THROW)

FD35T-C4WE3 FD35T-C4WV3 FD35T-C4W(6)3

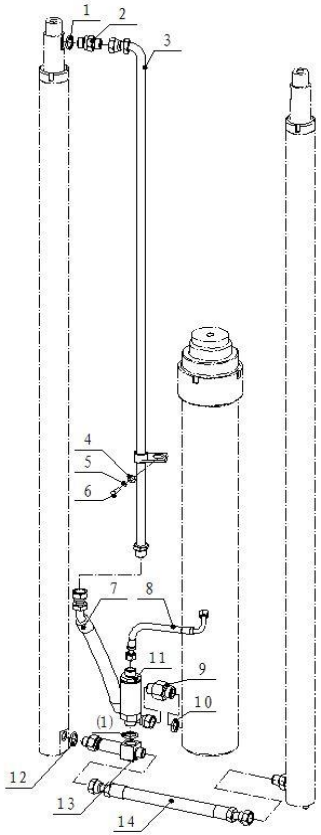

序号	物料ID.	代号	名称	数量	备注
Item No.	ID.	Part No.	Description	Q'ty	Remark
A	N/A	-	Mast hydraulic system	1	
01	69124144	GB/T3452.1-19*2.65-G	O-ring 19×2.65	1	
02	69003137	M3077601000	Pipe connector	1	
03	N/A	A35487-01000	Pipe ass'y	1	
04	69000309	GB/T5783-M8*16-8.8J	Bolt M8×16	1	
05	69000259	GB/T97.1-8	washer 8	1	
06	69000062	GB/T93-8	Washer 8	1	
07	69073241	35B87-00001	Middle cylinder H.P.hose	1	
08	69001400	16886-00001	Flow regulator H.P. hose	1	
09	69012037	30387-00003	Middle cylinder connector	1	
10	69124132	GB1235-30*3.5-G	O-ring 30×3.5	1	
11	69002923	35386-02000	Flow regulator	1	
12	69124142	GB/T3452.1-17*2.65-G	O-ring 17×2.65	1	
13	69016646	30386-01000	Lift cylinder tee connector	1	
14	69009659	45486-00002	H.P. hose	1	

图49/Fig49. 门架管路系统(二级全自由二联)/ MAST HYDRAULIC SYSTEM(FULL FREE 2-STAGE MAST Two-THROW)

FD35T-C4WE3 FD35T-C4WV3 FD35T-C4W(6)3

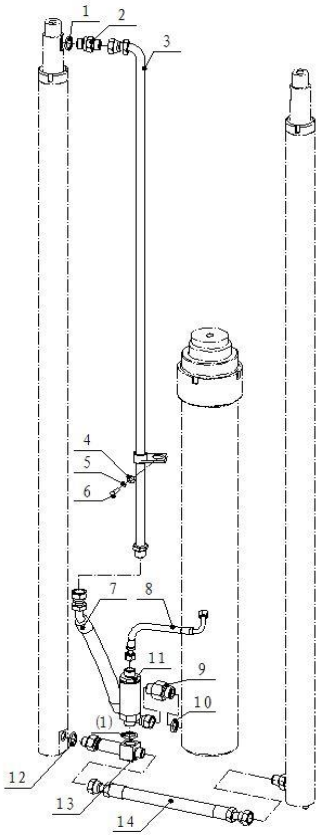

管路系统选用件-硬管总成(件3)
Mast Piping Optional Parts

起升高度 LIFTING HEIGHT	3.5t			备注 REMARK
	ID.	A35487-01000 Pipe ass'y		
3000	69055776	A35487-01001		标准
3300	69055777	A35487-01002		
3500	69055778	A35487-01003		
3700	69055779	A35487-01004		
4000	69055780	A35487-01005		
4500	69055781	A35487-01006		
5000	69055782	A35487-01007		
5500	69055783	A35487-01008		
6000	69055784	A35487-01009		

图50/Fig50. 门架管路系统(三级全自由二联) MAST HYDRAULIC SYSTEM(FULL FREE 3-STAGE MAST Two-THROW)

FD18T-C4WE3 FD18T-C4WV3 FD18T-C4W(6)3

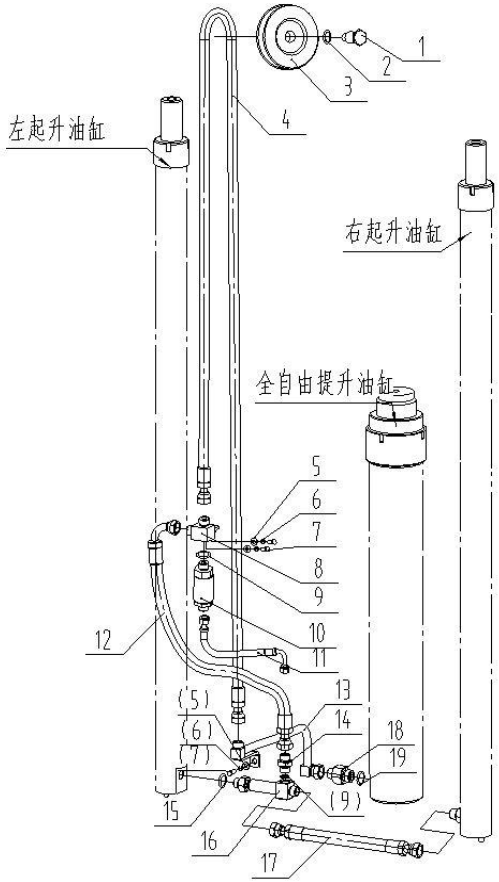

序号	物料ID	代号	名称	数量	备注
Item No.	ID.	Part No.	Descripition	Q'ty	Remark
A	N/A	-	Mast hydraulic system	1	
01	69016768	30388-00004	Step Bolt	1	
02	69000579	30386S-00004(8)	Sleeve	2	
03	69016659	30386S-00002	Pulley	1	
04	N/A	18B88-01000	Middle cylinder H.P. hose	1	
05	69000259	GB/T97.1-8	Washer 8	3	
06	69000062	GB/T93-8	Washer 8	3	
07	69000309	GB/T5783-M8*16-8.8J	Bolt M8×16	3	
08	69042079	20B88-02000	Flow regulator tee connector	1	
09	69022457	GB/T1235-24*2.4	O-ring 24×2.4	2	
10	69002918	15386-01000	Flow regulator	1	
11	69001400	16886-00001	Flow regulator H.P. hose	1	
12	69072908	18B88-00001	H.P.hose	1	
13	69072909	18B88-02000	Middle cylinder pipe		
14	69016767	30388-00003	Tee connector	1	
15	69124142	GB/T3452.1-17*2.65-G	O-seal ring 17×2.65	1	
16	69016646	30386-01000	Lift cylinder tee connector	1	
17	69001331	30386-00001	H.P.hose	1	
18	69006260	30388-00005	Middle cylinder connector	1	厂家自带
19	69018910	GB/T1235-30*3.1	O-ring 30×3.1	1	

图51/Fig51 .

门架管路系统(三级全自由二联) MAST HYDRAULIC SYSTEM(FULL FREE 3-STAGE MAST Two-THROW)

FD25T-C4WE3 FD25T-C4WV3 FD25T-C4W（6）3

FD35T-C4WE3 FD35T-C4WV3 FD35T-C4W（6）3

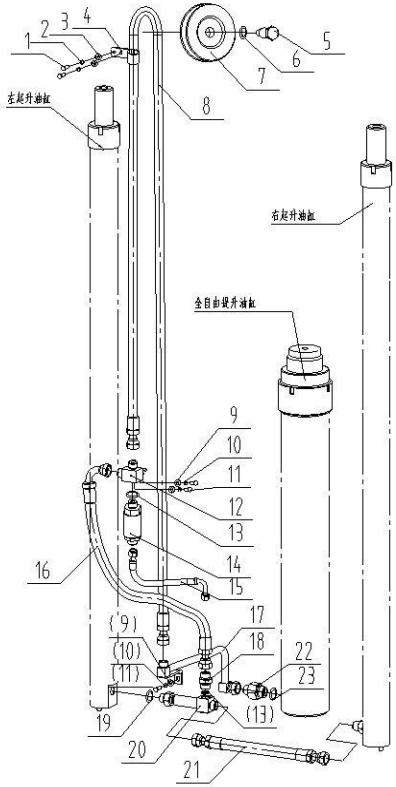

序号	物料ID	代号	名称	数量	备注
Item No.	ID.	Part No.	Descripition	Q'ty	Remark
A	N/A	-	Mast hydraulic system	1	
01	69000190	GB/T5783-M6*16-8.8J	Bolt M6×16	2	
02	69000060	GB/T93-6	Washer 6	2	
03	69000258	GB/T97.1-6	Washer 6	2	
04	69057149	20B88-00001	Clip	1	
05	69016768	30388-00004	Step Bolt	1	
06	69000579	30386S-00004(8)	Sleeve	2	
07	69016659	30386S-00002	Pulley	1	
08	N/A	20B88-01000	Middle cylinder H.P. hose	1	2.5t
-	N/A	35B88-01000	Middle cylinder H.P. hose	1	3.5t
09	69000259	GB/T97.1-8	Washer 8	3	
10	69000062	GB/T93-8	Washer 8	3	
11	69000309	GB/T5783-M8*16-8.8J	Bolt M8×16	3	
12	69042079	20B88-02000	Flow regulator tee connector	1	
13	69022457	GB/T1235-24*2.4	O-ring 24×2.4	2	
14	69002920	20386-01000	Flow regulator	1	2.5t
-	69002923	35386-02000	Flow regulator	1	3.5t
15	69001400	16886-00001	Flow regulator H.P. hose	1	
16	69022719	45776-00016	H.P.hose	1	
17	69072364	25BY88-01000	Middle cylinder pipe	1	2.5t
-	69042134	35B88-02000	Middle cylinder pipe	1	3.5t
18	69016767	30388-00003	Tee connector	1	
19	69124142	GB/T3452.1-17*2.65-G	O-seal ring 17×2.65	1	
20	69016646	30386-01000	Lift cylinder tee connector	1	
21	69005977	20388-00002	H.P.hose	1	2.5t

图51/Fig51 .

门架管路系统(三级全自由二联) MAST HYDRAULIC SYSTEM(FULL FREE 3-STAGE MAST Two-THROW)

FD25T-C4WE3 FD25T-C4WV3 FD25T-C4W（6）3

FD35T-C4WE3 FD35T-C4WV3 FD35T-C4W（6）3

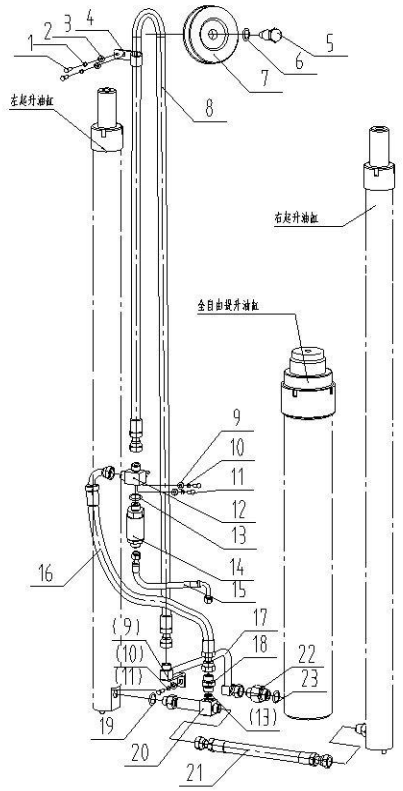

序号	物料ID.	代号	名称	数量	备注
Item No.	ID.	Part No.	Descripition	Q'ty	Remark
A		-	Mast hydraulic system	1	
-	69009659	45486-00002	H.P.hose	1	3.5t
22	69006260	30388-00005	Middle cylinder connector	1	厂家自带
23	69018910	GB/T1235-30*3.1	O-ring 30×3.1	1	

图51/Fig51. 门架管路系统(三级全自由二联) MAST HYDRAULIC SYSTEM(FULL FREE 3-STAGE MAST Two-THROW)

FD18T-C4WE3	FD18T-C4WV3	FD18T-C4W（6）3
FD25T-C4WE3	FD25T-C4WV3	FD25T-C4W（6）3
FD35T-C4WE3	FD35T-C4WV3	FD35T-C4W（6）3

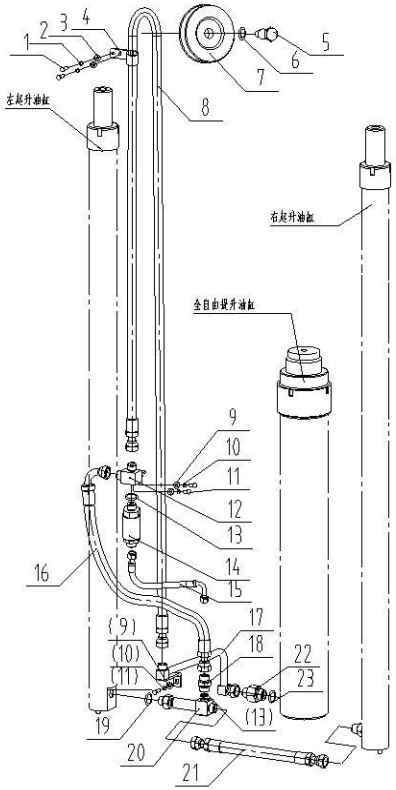

管路系统选用件-全自由缸进油胶管(件4、件8)
Mast Piping Optional Parts

起升高度 LIFTING HEIGHT	1.8t		2.5t
	ID.	18B88-01000 Middle cylinder hose	ID.
3600	69012316	16888-01001	-
3700	-	-	69012317
4000	69012317	16888-01002	69016754
4350	69012315	16888-01003	69016755
4500	69012318	16888-01004	-
4700	69016879	35388-01004	69016757
4800	69016756	30388-01005	-
5000	69016757	30388-01006	69016758
5500	69012322	16888-01008	69012944
6000	69016760	30388-01009	69042082
6500	69016761	30388-01010	-

图51/Fig51. 门架管路系统(三级全自由二联) MAST HYDRAULIC SYSTEM(FULL FREE 3-STAGE MAST Two-THROW)

FD18T-C4WE3	FD18T-C4WV3	FD18T-C4W（6）3
FD25T-C4WE3	FD25T-C4WV3	FD25T-C4W（6）3
FD35T-C4WE3	FD35T-C4WV3	FD35T-C4W（6）3

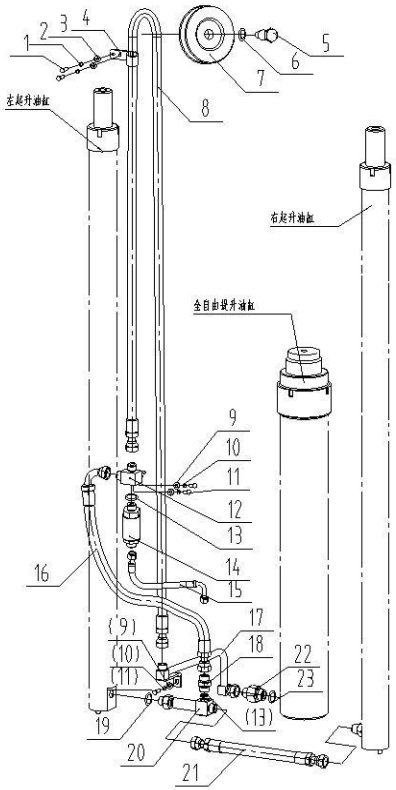

管路系统选用件-全自由缸进油胶管(件4、件8)
Mast Piping Optional Parts

起升高度 LIFTING HEIGHT	3.5t			
	ID.	35B88-01000 Middle cylinder hose		
3600	-	-		
3700	69016754	30388-01003		
4000	69012318	16888-01004		
4350	69012941	40388X-01004		
4500	-	-		
4700	69016881	35388-01006		
4800	-	-		
5000	69016882	35388-01007		
5500	69012323	16888-01009		
6000	69016761	30388-01010		
6500	-	-		

图52/Fig52. 门架管路系统(三级全自由三联) MAST HYDRAULIC SYSTEM(FULL FREE 3-STAGE MAST Three-THROW)

FD18T-C4WE3 FD18T-C4WV3 FD18T-C4W（6）3

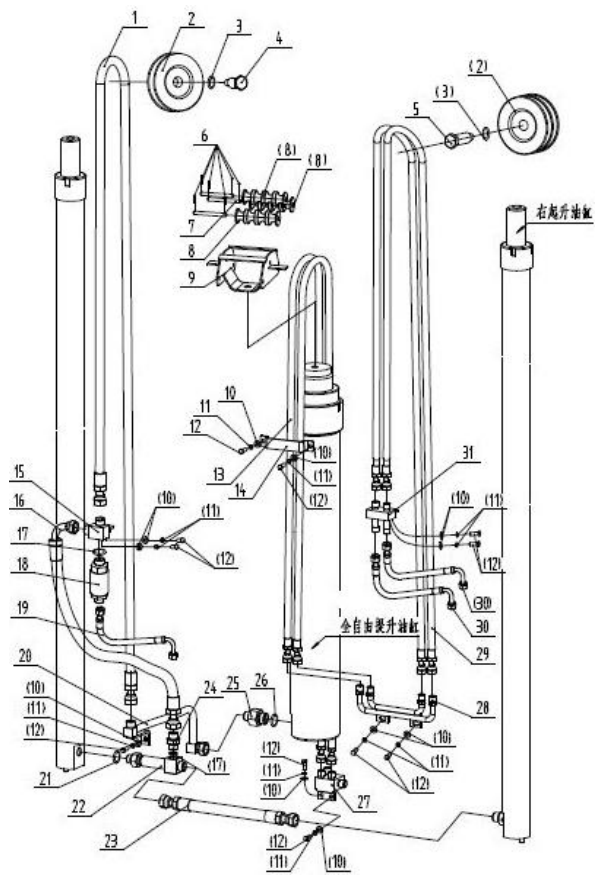

序号	物料ID	代号	名称	数量	备注
Item No.	ID.	Part No.	Descripition	Q'ty	Remark
A	N/A	-	Mast hydraulic system	1	
01	N/A	18B88-01000	Middle cylinder H.P. hose	1	
02	69016659	30386S-00002	Pulley	3	
03	69000579	30386S-00004(8)	Sleeve	2	
04	69016768	30388-00004	Step Bolt	1	
05	69016660	30386S-00003	Step Bolt	1	
06	69005787	GB/T91-2*16	Cotter pin 2×16	6	
07	69042097	GB/T880-Φ8*120	Shaft Φ8×120	3	
08	69123554	A30488S-00001B	Pulley	3	
09	69104121	S15487S-05000A-Black	Roller bracket	1	
10	69000259	GB/T97.1-8	Washer 8	11	
11	69000062	GB/T93-8	Washer 8	11	
12	69000309	GB/T5783-M8*16-8.8J	Bolt M8×16	11	
13	N/A	18B88S-01000	Pulley H.P. hose I	2	
14	69042096	A30488S-00002	Clip	1	
15	69042079	20B88-02000	Flow regulator tee connector	1	
16	69072908	18B88-00001	H.P.hose	1	
17	69022457	GB/T1235-24*2.4	O-ring 24×2.4	2	
18	69002918	15386-01000	Flow regulator	1	
19	69001400	16886-00001	Flow regulator H.P. hose	1	
20	69072909	18B88-02000	Middle cylinder pipe	1	
21	69124142	GB/T3452.1-17*2.65-G	O-seal ring 17×2.65	1	
22	69016646	30386-01000	Lift cylinder tee connector	1	
23	69001331	30386-00001	H.P.hose	1	
24	69016767	30388-00003	Tee connector	1	

图52/Fig52. 门架管路系统(三级全自由三联) MAST HYDRAULIC SYSTEM(FULL FREE 3-STAGE MAST Three-THROW)

FD18T-C4WE3 FD18T-C4WV3 FD18T-C4W（6）3

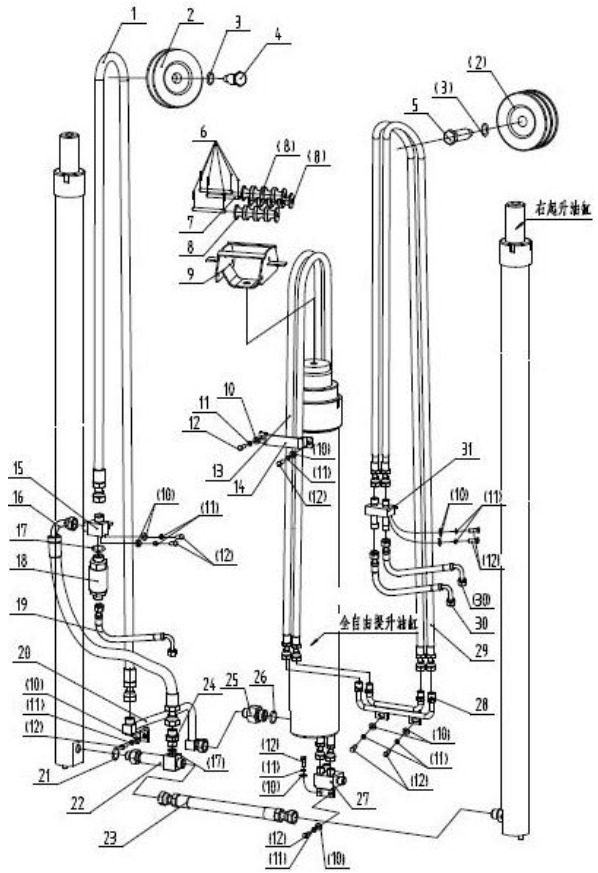

序号	物料ID	代号	名称	数量	备注
Item No.	ID.	Part No.	Descripition	Q'ty	Remark
A	N/A	-	Mast hydraulic system	1	
25	69006260	30388-00005	Middle cylinder connector	1	厂家自带
26	69018910	GB/T1235-30*3.1	O-ring 30×3.1	1	
27	69034198	A30488S-04000	Cross connector Ⅰ	1	
28	69072932	18B88S-02000	Connecting pipe	1	
29	N/A	18B88S-03000	Pulley H.P. hose Ⅱ	2	
30	69016680	30386SS-00001	Adguesting H.P.hose Ⅰ	1	
31	69042085	20B88S-04000	Cross connector	1	

图52/Fig52. 门架管路系统(三级全自由三联) MAST HYDRAULIC SYSTEM(FULL FREE 3-STAGE MAST Three-THROW)

FD18T-C4WE3 FD18T-C4WV3 FD18T-C4W（6）3

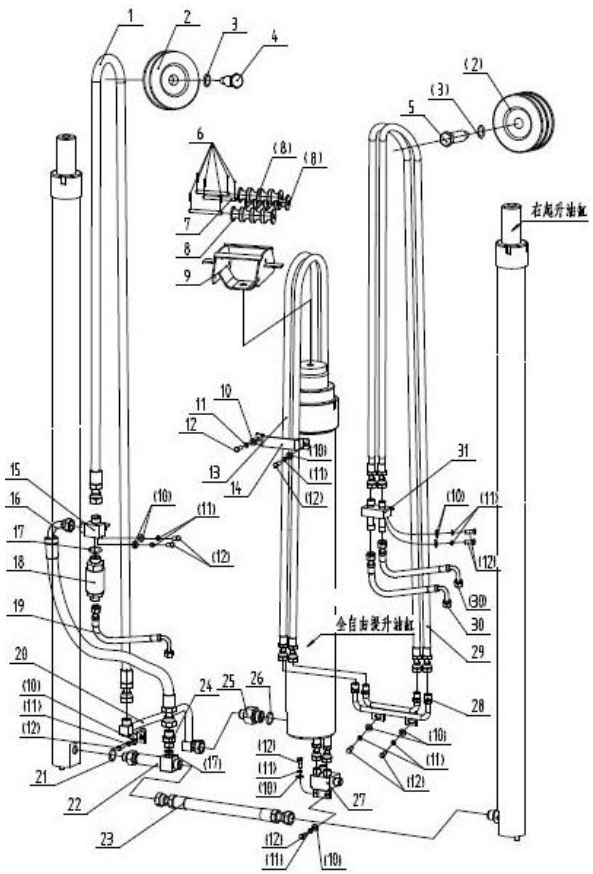

管路系统选用件-侧移胶管Ⅰ(件13)
Sway hose Optional Parts

起升高度 LIFTING HEIGHT	PART-13			
	ID.	18B88S-01000 Pulley H.P. hose Ⅰ		
3600	69016866	35387S-02005		
4000	69013001	30387S-01013		
4350	69016639	20388SS-01005		
4500	69013002	30387S-01014		
4700	69016772	30388S-01001		
4800	69017070	30386S-01003		
5000	69013015	30387S-02009		
5500	69016643	20388SS-01009		
6000	69013006	30387S-01018		
6500	69013017	30387S-02011		

图52/Fig52. 门架管路系统(三级全自由三联) MAST HYDRAULIC SYSTEM(FULL FREE 3-STAGE MAST Three-THROW)

FD18T-C4WE3 FD18T-C4WV3 FD18T-C4W（6）3

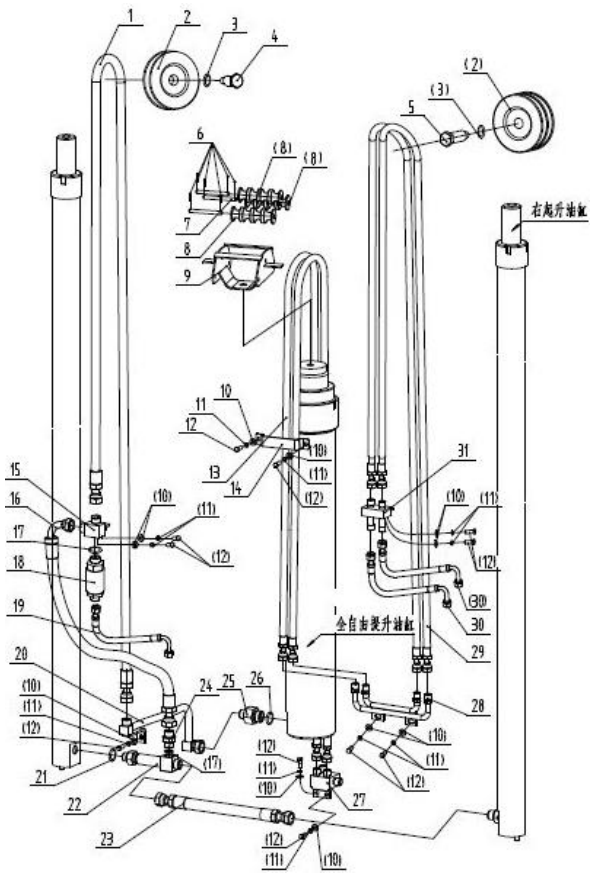

管路系统选用件-侧移胶管Ⅱ(件29)
Sway hose Optional Parts

起升高度 LIFTING HEIGHT	PART-29			
	ID.	18B88S-03000 Pulley H.P. hoseⅡ		
3600	69016820	30388SS-02006		
4000	69016643	20388SS-01009		
4350	69016889	30388S-02008		
4500	69016776	30388S-01004		
4700	69016805	30388SS-01004		
4800	69016650	30386S-01008		
5000	69016651	30386S-01009		
5500	69018310	35386S-01012		
6000	69016781	30388S-01009		
6500	69016654	30386S-01015		

图53/Fig53. 门架管路系统(三级全自由三联) MAST HYDRAULIC SYSTEM(FULL FREE 3-STAGE MAST Three-THROW)

FD25T-C4WE3 FD25T-C4WV3 FD25T-C4W（6）3

FD35T-C4WE3 FD35T-C4WV3 FD35T-C4W（6）3

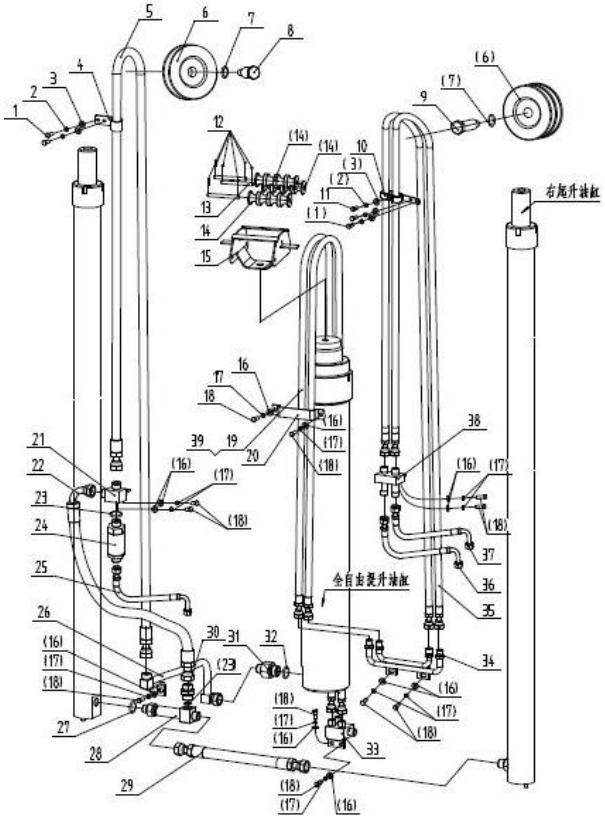

序号	物料ID	代号	名称	数量	备注
Item No.	ID.	Part No.	Descripition	Q'ty	Remark
A	N/A	-	Mast hydraulic system	1	
01	69000190	GB/T5783-M6*16-8.8J	Bolt M6×16	4	
02	69000060	GB/T93-6	Washer 6	5	
03	69000258	GB/T97.1-6	Washer 6	5	
04	69057149	20B88-00001	Clip	1	
05	N/A	20B88-01000	Middle cylinder H.P. hose	1	2.5t
-	N/A	35B88-01000	Middle cylinder H.P. hose	1	3.5t
06	69016659	30386S-00002	Pulley	3	
07	69000579	30386S-00004(8)	Sleeve	2	
08	69016768	30388-00004	Step Bolt	1	
09	69016660	30386S-00003	Step Bolt	1	
10	69057150	20B88S-00001	Clip	1	
11	69000194	GB/T5783-M6*25-8.8J	Bolt M6×25	1	
12	69005787	GB/T91-2*16	Cotter pin 2×16	6	
13	69042097	GB/T880-Φ8*120	Shaft Φ8×120	3	
14	69123554	A30488S-00001B	Pulley	3	
15	69115099	A30488S-01000A-Black	Roller bracket	1	
16	69000259	GB/T97.1-8	Washer 8	11	
17	69000062	GB/T93-8	Washer 8	11	
18	69000309	GB/T5783-M8*16-8.8J	Bolt M8×16	11	
19	N/A	20B88S-01000	Pulley H.P. hose Ⅰ	2	2.5t
-	N/A	35B88S-01000	Pulley H.P. hose Ⅰ	2	3.5t
20	69042096	A30488S-00002	Clip	1	
21	69042079	20B88-02000	Flow regulator tee connector	1	
22	69022719	45776-00016	H.P.hose Ⅱ	1	

图53/Fig53. 门架管路系统(三级全自由三联) MAST HYDRAULIC SYSTEM(FULL FREE 3-STAGE MAST Three-THROW)

FD25T-C4WE3 FD25T-C4WV3 FD25T-C4W（6）3

FD35T-C4WE3 FD35T-C4WV3 FD35T-C4W（6）3

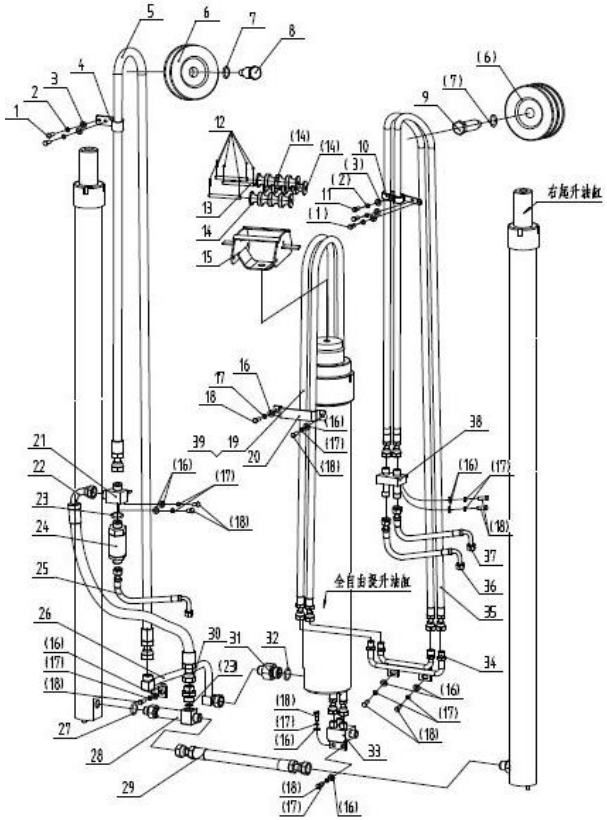

序号	物料ID	代号	名称	数量	备注
Item No.	ID.	Part No.	Descripition	Q'ty	Remark
A	N/A	-	Mast hydraulic system	1	
23	69022457	GB/T1235-24*2.4	O-ring 24×2.4	2	
24	69002920	20386-01000	Flow regulator	1	2.5t
-	69002923	35386-02000	Flow regulator	1	3.5t
25	69001400	16886-00001	Flow regulator H.P. hose	1	
26	69072364	25BY88-01000	Middle cylinder pipe	1	2.5t
-	69042134	35B88-02000	Middle cylinder pipe	1	3.5t
27	69124142	GB/T3452.1-17*2.65-G	O-seal ring 17×2.65	1	
28	69016646	30386-01000	Lift cylinder tee connector	1	
29	69005977	20388-00002	H.P.hose	1	2.5t
-	69009659	45486-00002	H.P.hose	1	3.5t
30	69016767	30388-00003	Tee connector	1	
31	69006260	30388-00005	Middle cylinder connector	1	厂家自带
32	69018910	GB/T1235-30*3.1	O-ring 30×3.1	1	
33	69034198	A30488S-04000	Cross connector Ⅰ	1	
34	69072367	25BY88S-01000	Connecting pipe	1	2.5t
-	69042094	20B88S-02000	Connecting pipe	1	3.5t
35	N/A	20B88S-03000	Pulley H.P. hose Ⅱ	2	2.5t
-	N/A	35B88S-02000	Pulley H.P. hose Ⅱ	2	3.5t
36	69018460	20386SS-00001	Adguesting H.P.hose Ⅰ	1	
37	69018461	20386SS-00002	Adguesting H.P.hose Ⅱ	1	
38	69042085	20B88S-04000	Cross connector	1	
39	N/A	20B88S-05000	Pulley H.P. hoseⅢ	2	2.5t(内置侧移用)
-	N/A	35B88S-03000	Pulley H.P. hoseⅢ	2	3.5t(内置侧移用)

图53/Fig53. 门架管路系统(三级全自由三联) MAST HYDRAULIC SYSTEM(FULL FREE 3-STAGE MAST Three-THROW)

FD25T-C4WE3 FD25T-C4WV3 FD25T-C4W（6）3

FD35T-C4WE3 FD35T-C4WV3 FD35T-C4W（6）3

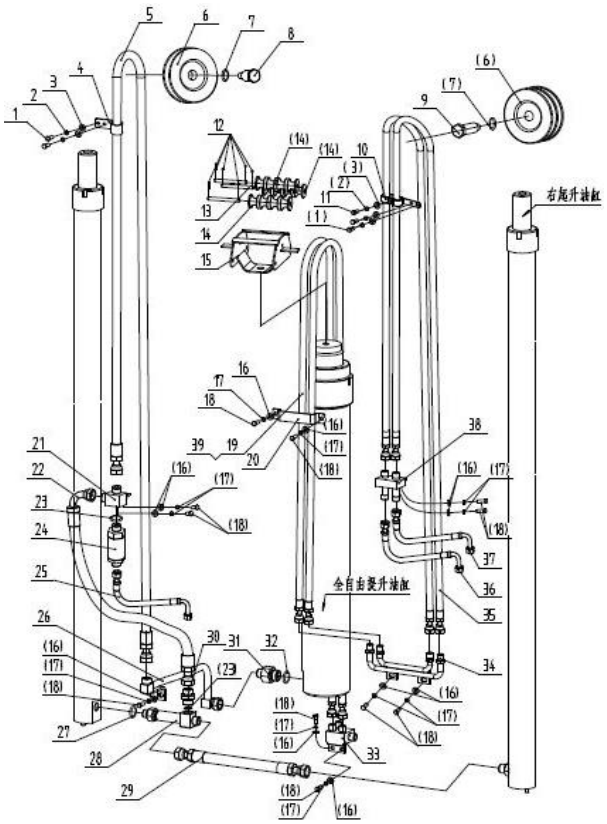

管路系统选用件-侧移胶管Ⅰ(件19)
Sway hose Optional Parts

起升高度 LIFTING HEIGHT	2.5t		3.5t
	ID.	20B88S-01000 Pulley H.P. hose Ⅰ	ID.
3700	69012997	30387S-01009	69012999
4000	69013000	30387S-01012	69013001
4350	69013014	30387S-02008	69013002
4700	69016772	30388S-01001	69017070
5000	69013015	30387S-02009	69016785
5500	69017072	30386S-01005	69016643
6000	69013006	30387S-01018	69016629

图53/Fig53. 门架管路系统(三级全自由三联) MAST HYDRAULIC SYSTEM(FULL FREE 3-STAGE MAST Three-THROW)

FD25T-C4WE3 FD25T-C4WV3 FD25T-C4W（6）3

FD35T-C4WE3 FD35T-C4WV3 FD35T-C4W（6）3

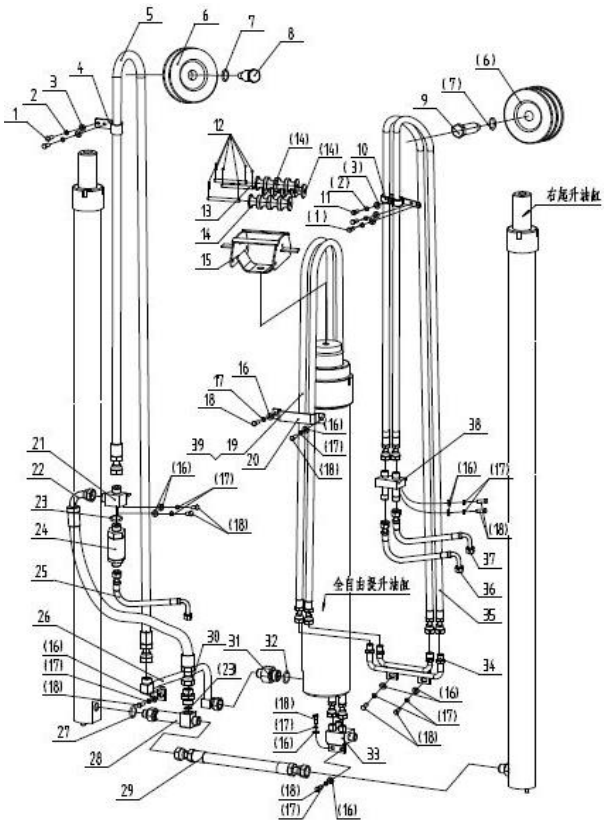

管路系统选用件-侧移胶管Ⅱ(件35)
Sway hose Optional Parts

起升高度 LIFTING HEIGHT	2.5t		3.5t
	ID.	20B88S-03000 Pulley H.P. hoseⅡ	ID.
3700	69013016	30387S-02010	69016629
4000	69016629	20388S-01007	69013017
4350	69016805	30388SS-01004	69013018
4700	69016778	30388S-01006	69017074
5000	69017075	30386S-01012	69016894
5500	69046328	A20488SS-02001	69016895
6000	69016810	30388SS-01009	69016654

图53/Fig53. 门架管路系统(三级全自由三联) MAST HYDRAULIC SYSTEM(FULL FREE 3-STAGE MAST Three-THROW)

FD25T-C4WE3 FD25T-C4WV3 FD25T-C4W（6）3

FD35T-C4WE3 FD35T-C4WV3 FD35T-C4W（6）3

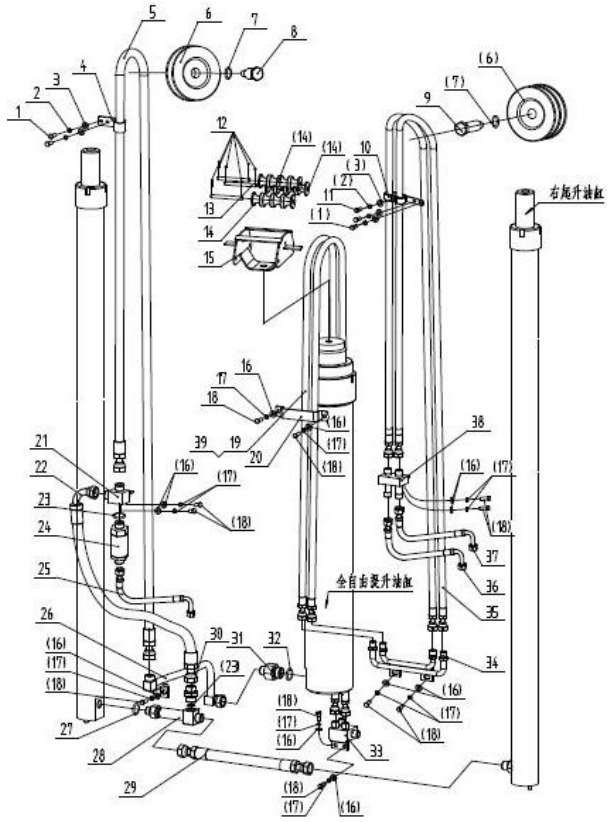

管路系统选用件-侧移胶管III(件39)
Sway hose Optional Parts

起升高度 LIFTING HEIGHT	2.5t		3.5t
	ID.	20B88S-05000 Pulley H.P. hoseIII	ID.
3700	69012997	30387S-01009	69012998
4000	69012999	30387S-01011	69013001
4350	69013014	30387S-02008	69016639
4700	69013002	30387S-01014	69017070
5000	69016820	30388SS-02006	69016785
5500	69017072	30386S-01005	69016643
6000	69013006	30387S-01018	69016629

图54/Fig54. 门架管路系统(三级全自由四联) MAST HYDRAULIC SYSTEM(FULL FREE 3-STAGE MAST Four-THROW)

FD18T-C4WE3 FD18T-C4WV3 FD18T-C4W（6）3

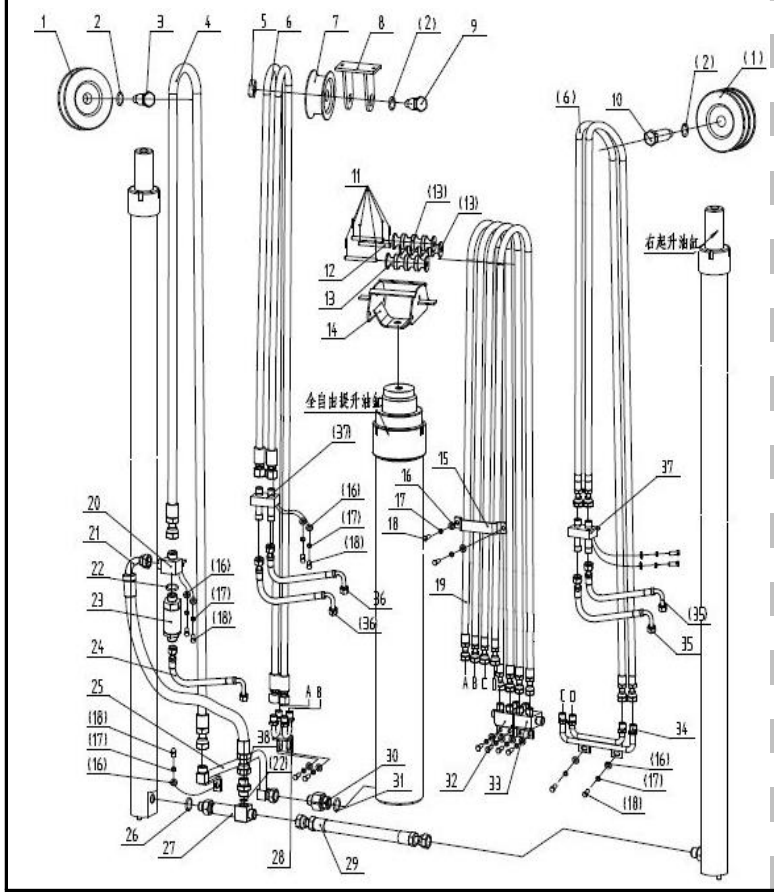

序号	物料ID	代号	名称	数量	备注
Item No.	ID.	Part No.	Descripition	Q'ty	Remark
A	N/A	-	Mast hydraulic system	1	
01	69016659	30386S-00002	Pulley	3	
02	69000579	30386S-00004(8)	Sleeve	5	
03	69016768	30388-00004	Step Bolt	1	
04	N/A	18B88-01000	Middle cylinder H.P. hose	1	
05	69000112	GB/T6170-M8-8J	Nut M8	1	
06	N/A	18B88S-03000	Pulley H.P. hoseⅡ	4	
07	69072935	18B88SS-00001	Pulley	1	
08	69072937	18B88SS-01000	Roller bracket	1	
09	69072936	18B88SS-00002	Step Bolt	1	
10	69016660	30386S-00003	Step Bolt	1	
11	69005787	GB/T91-2*16	Cotter pin 2×16	6	
12	69042097	GB/T880-Φ8*120	Shaft Φ8×120	3	
13	69123554	A30488S-00001B	Pulley	3	
14	69115099	A30488S-01000A-Black	Roller bracket	1	
15	69042096	A30488S-00002	Clip	1	
16	69000259	GB/T97.1-8	Washer 8	19	
17	69000062	GB/T93-8	Washer 8	19	
18	69000309	GB/T5783-M8*16-8.8J	Bolt M8×16	19	
19	N/A	18B88S-01000	Pulley H.P. hoseⅠ	4	
20	69042079	20B88-02000	Flow regulator tee connector	1	
21	69072908	18B88-00001	H.P.hose	1	
22	69022457	GB/T1235-24*2.4	O-ring 24×2.4	2	
23	69002918	15386-01000	Flow regulator	1	
24	69001400	16886-00001	Flow regulator H.P. hose	1	

图54/Fig54. 门架管路系统(三级全自由四联) MAST HYDRAULIC SYSTEM(FULL FREE 3-STAGE MAST Four-THROW)

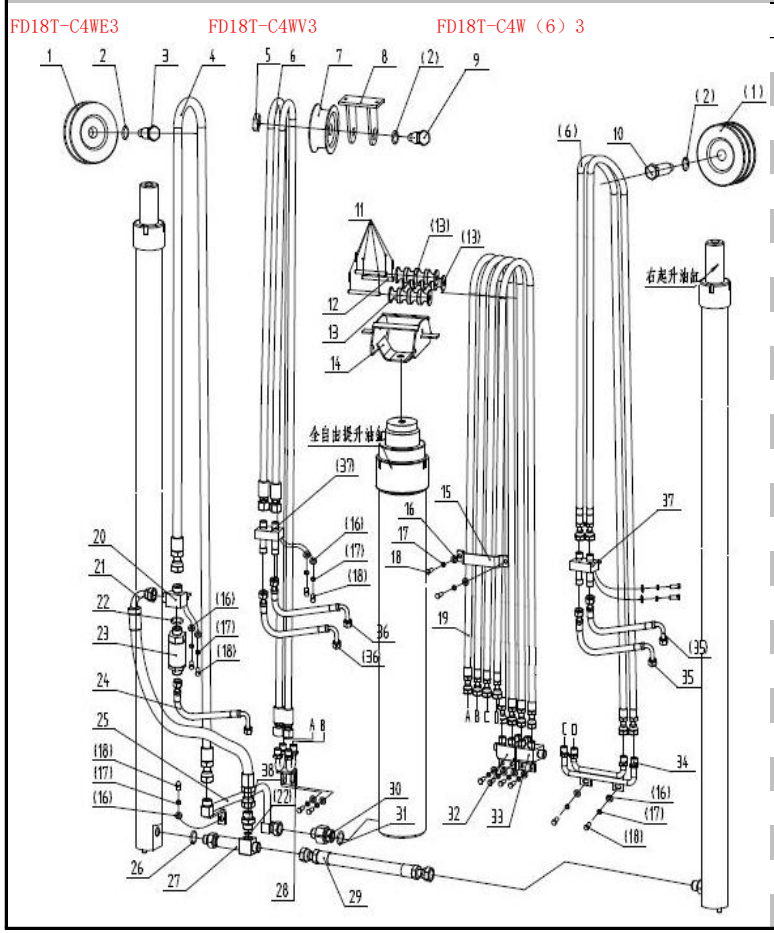

序号	物料ID	代号	名称	数量	备注
Item No.	ID.	Part No.	Descripition	Q'ty	Remark
A	N/A	-	Mast hydraulic system	1	
25	69072909	18B88-02000	Middle cylinder pipe	1	
26	69124142	GB/T3452.1-17*2.65-G	O-seal ring 17×2.65	1	
27	69016646	30386-01000	Lift cylinder tee connector	1	
28	69072938	18B88SS-02000	Connecting pipe	1	
29	69001331	30386-00001	H.P.hose	1	
30	69006260	30388-00005	Middle cylinder connector	1	厂家自带
31	69018910	GB/T1235-30*3.1	O-ring 30×3.1	1	
32	69034214	A30488SS-04000	Cross connectorⅡ	1	
33	69034198	A30488S-04000	Cross connector Ⅰ	1	
34	69072932	18B88S-02000	Connecting pipe	1	
35	69016680	30386SS-00001	Adguesting H.P.hose Ⅰ	2	
36	69016682	30386SS-00002	Adguesting H.P.hoseⅡ	2	
37	69042085	20B88S-04000	Cross connector	2	
38	69016767	30388-00003	Tee connector	1	

图55/Fig55. 门架管路系统(三级全自由四联) MAST HYDRAULIC SYSTEM(FULL FREE 3-STAGE MAST Four-THROW)

FD25T-C4WE3 FD25T-C4WV3 FD25T-C4W（6）3

FD35T-C4WE3 FD35T-C4WV3 FD35T-C4W（6）3

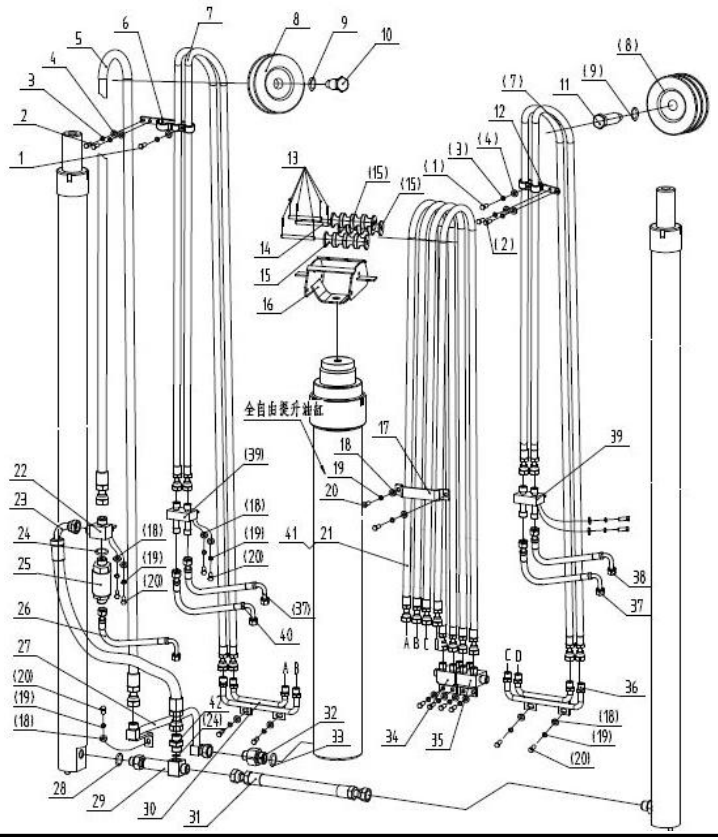

序号	物料ID	代号	名称	数量	备注
Item No.	ID.	Part No.	Descripition	Q'ty	Remark
A	N/A	-	Mast hydraulic system	1	
01	69000194	GB/T5783-M6*25-8.8J	Bolt M6×25	2	
02	69000189	GB/T5783-M6*12-8.8J	Bolt M6×12	4	
03	69000060	GB/T93-6	Washer 6	6	
04	69000258	GB/T97.1-6	Washer 6	6	
05	N/A	20B88-01000	Middle cylinder H.P. hose	1	2.5t
-	N/A	35B88-01000	Middle cylinder H.P. hose	1	3.5t
06	69057151	20B88SS-00002	Clip	1	
07	N/A	20B88S-03000	Pulley H.P. hose Ⅱ	4	2.5t
-	N/A	35B88S-02000	Pulley H.P. hose Ⅱ	4	3.5t
08	69016659	30386S-00002	Pulley	5	
09	69000579	30386S-00004(8)	Sleeve	7	
10	69042143	20B88SS-00001	Step Bolt	1	
11	69016660	30386S-00003	Step Bolt	1	
12	69057150	20B88S-00001	Clip	1	
13	69005787	GB/T91-2*16	Cotter pin 2×16	6	
14	69042097	GB/T880-Φ8*120	Shaft Φ8×120	3	
15	69123554	A30488S-00001B	Pulley	3	
16	69115099	A30488S-01000A-Black	Roller bracket	1	
17	69042096	A30488S-00002	Clip	1	
18	69000259	GB/T97.1-8	Washer 8	11	
19	69000062	GB/T93-8	Washer 8	11	
20	69000309	GB/T5783-M8*16-8.8J	Bolt M8×16	11	
21	N/A	20B88S-01000	Pulley H.P. hose Ⅰ	4	2.5t
-	N/A	35B88S-01000	Pulley H.P. hose Ⅰ	4	3.5t

图55/Fig55. 门架管路系统(三级全自由四联) MAST HYDRAULIC SYSTEM(FULL FREE 3-STAGE MAST Four-THROW)

FD25T-C4WE3 FD25T-C4WV3 FD25T-C4W（6）3

FD35T-C4WE3 FD35T-C4WV3 FD35T-C4W（6）3

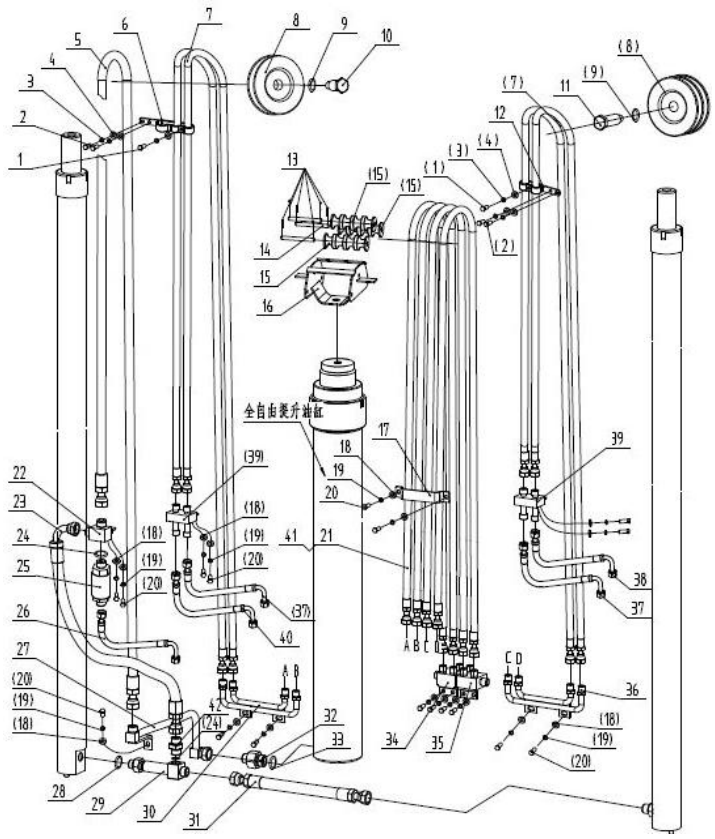

序号	物料ID	代号	名称	数量	备注
Item No.	ID.	Part No.	Descripition	Q'ty	Remark
A	N/A	-	Mast hydraulic system	1	
22	69042079	20B88-02000	Flow regulator tee connector	1	
23	69022719	45776-00016	H.P.hose Ⅱ	1	
24	69022457	GB/T1235-24*2.4	O-ring 24×2.4	2	
25	69002920	20386-01000	Flow regulator	1	2.5t
-	69002923	35386-02000	Flow regulator	1	3.5t
26	69001400	16886-00001	Flow regulator H.P. hose	1	
27	69072364	25BY88-01000	Middle cylinder pipe	1	2.5t
-	69042134	35B88-02000	Middle cylinder pipe	1	3.5t
28	69124142	GB/T3452.1-17*2.65-G	O-seal ring 17×2.65	1	
29	69016646	30386-01000	Lift cylinder tee connector	1	
30	69072393	25BY88SS-01000	Connecting pipe	1	
-	69042099	20B88SS-01000	Connecting pipe	1	
31	69005977	20388-00002	H.P.hose	1	2.5t
-	69009659	45486-00002	H.P.hose	1	3.5t
32	69006260	30388-00005	Middle cylinder connector	1	厂家自带
33	69018910	GB/T1235-30*3.1	O-ring 30×3.1	1	
34	69034214	A30488SS-04000	Cross connector Ⅱ	1	
35	69034198	A30488S-04000	Cross connector Ⅰ	1	
36	69072367	25BY88S-01000	Connecting pipe	1	2.5t
-	69042094	20B88S-02000	Connecting pipe	1	3.5t
37	69018460	20386SS-00001	Adguesting H.P.hose Ⅰ	1	
38	69018461	20386SS-00002	Adguesting H.P.hose Ⅱ	2	
39	69042085	20B88S-04000	Cross connector	2	
40	69016680	30386SS-00001	Adguesting H.P.hose Ⅰ	1	

图55/Fig55. 门架管路系统(三级全自由四联) MAST HYDRAULIC SYSTEM(FULL FREE 3-STAGE MAST Four-THROW)

FD25T-C4WE3 FD25T-C4WV3 FD25T-C4W（6）3

FD35T-C4WE3 FD35T-C4WV3 FD35T-C4W（6）3

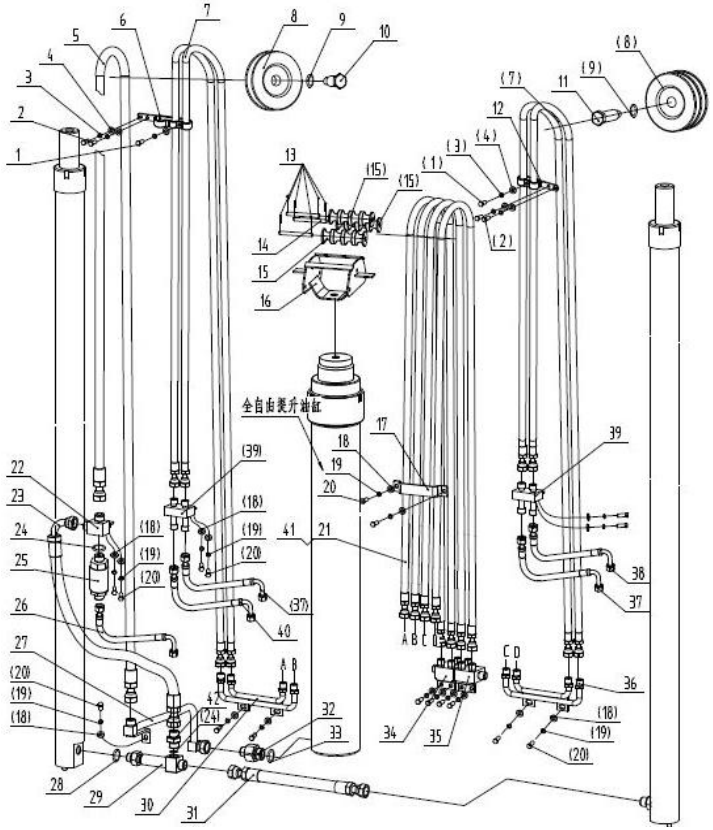

序号	物料ID	代号	名称	数量	备注
Item No.	ID.	Part No.	Descripition	Q'ty	Remark
A	N/A	-	Mast hydraulic system	1	
41	N/A	20B88S-05000	Pulley H.P. hose III	4	2.5t(内置侧移用)
-	N/A	35B88S-03000	Pulley H.P. hose III	4	3.5t(内置侧移用)
42	69016767	30388-00003	Tee connector	1	

图56/Fig56.

FD18T-C4WE3 FD18T-C4WV3 FD18T-C4W（6）3
FD25T-C4WE3 FD25T-C4WV3 FD25T-C4W（6）3
FD35T-C4WE3 FD35T-C4WV3 FD35T-C4W（6）3

货叉/FORK

序号	物料	代号	名称	数量	备注
Item No.	ID	Part No.	Descripition	Q'ty	Remark
01	N/A	18B80-03000	Fork ass'y	2	1.8t
-	N/A	20B80-03000	Fork ass'y	2	2.5t
-	N/A	35B80-03000	Fork ass'y	2	3.5t
02	N/A	M1538003001-1	Positioning pin	2	1.8t
-	N/A	20B80-03101	Positioning pin	2	2.5t
-	N/A	35B80-03101	Positioning pin	2	3.5t
03	N/A	M1538003002-2	Spring	2	1.8t
-	N/A	20B80-03102	Spring	2	2.5t
-	N/A	35B80-03102	Spring	2	3.5t
04	N/A	M1538003003-3	Handle	2	1.8t
-	N/A	20B80-03103	Handle	2	2.5t
-	N/A	35B80-03103	Handle	2	3.5t

图56/Fig56.			货叉/FORK
FD18T-C4WE3	FD18T-C4WV3	FD18T-C4W（6）3	
FD25T-C4WE3	FD25T-C4WV3	FD25T-C4W（6）3	
FD35T-C4WE3	FD35T-C4WV3	FD35T-C4W（6）3	

货叉选用表 Fork optional parts

长度LENGTH	物料ID ID.	1.8t	物料ID ID.	2.5t	备注 REMARK
1070	69110448	18B80-HC-1070-Black	69110456	C-107	
1220	69110447	18B80-HC-1220-Black	69110454	C-122	
1370	69128020	18B80-HC-1370-Black	69110451	C-137	
1520	69110446	18B80-HC-1520-Black	69110450	C-152	
1670	69128021	18B80-HC-1670-Black	69110449	C-167	
1820	69128023	18B80-HC-1820-Black	69128033	C-182	
1970	69128024	18B80-HC-1970-Black	69128034	C-197	
2120	69128026	18B80-HC-2120-Black	69128035	C-212	
2220	69128032	18B80-HC-2220-Black	69128036	C-222	

图56/Fig56.			货叉/FORK
FD18T-C4WE3	FD18T-C4WV3	FD18T-C4W（6）3	
FD25T-C4WE3	FD25T-C4WV3	FD25T-C4W（6）3	
FD35T-C4WE3	FD35T-C4WV3	FD35T-C4W（6）3	

货叉选用表 Fork optional parts

长度LENGTH	物料ID ID.	3.5t			备注 REMARK
1070	69110469	35B80-HC-1070-Black			
1220	69110468	35B80-HC-1220-Black			
1370	69110467	35B80-HC-1370-Black			
1520	69110466	35B80-HC-1520-Black			
1670	69110465	35B80-HC-1670-Black			
1820	69110464	35B80-HC-1820-Black			
1970	69110463	35B80-HC-1970-Black			
2120	69110461	35B80-HC-2120-Black			
2220	69110459	35B80-HC-2220-Black			

图57/Fig57.

货叉架(基本)/FORK CARRIAGE (NORMAL MAST)

FD18T-C4WE3	FD18T-C4WV3	FD18T-C4W（6）3
FD25T-C4WE3	FD25T-C4WV3	FD25T-C4W（6）3
FD35T-C4WE3	FD35T-C4WV3	FD35T-C4W（6）3

序号	物料ID	代号	名称	数量	备注
Item No.	ID.	Part No.	Descripition	Q'ty	Remark
01	69103693	18B80-04000-BLACK	Fork carriage	1	1.8t
-	69103698	25BY80-02000-Black	Fork carriage	1	2.5t
-	69103704	35BY80-01000-Black	Fork carriage	1	3.5t
02	69120266	18B80-02000-Black	Backrest	1	1.8t
-	69103698	25BY80-02000-Black	Backrest	1	2.5t
-	69112181	30380A-02000/1.5-Black	Backrest	1	3.5t
03	69002362	M3038008000	Roller 130309KT	2	2.5t、3.5t
04	69005111	GB/T93-14	Washer 14	8	
05	69038580	GB/T5786-M14*1.5*25-8.8J	Bolt M14×1.5×25	8	
06	69000071	GB/T894.1-Φ45	Snap ring 45	2	
07	69020211	A25780-06000	Combination roller 760211K1T	6	1.8t
-	69021690	M3038007000	Combination roller 760311NT	4	2.5t、3.5t
08	69000103	GB/T6170-M10-8J	Nut M10	1	
09	69000128	GB/T5783-M10*30-8.8J	Bolt M10×30	1	

图58/Fig58. 货叉架(两级全自由)/LIFT BRACKET (NORMAL MAST)

FD35T-C4WE3 FD35T-C4WV3 FD35T-C4W（6）3

序号 Item No.	物料ID ID.	代号 Part No.	名称 Description	数量 Q'ty	备注 Remark
01	69109063	35BY82-01000-Black	Fork carriage	1	
02	69112181	30380A-02000/1.5-Black	Backrest	1	
03	69021690	M3038007000	Combination roller 760311NT	6	
04	69005111	GB/T93-14	Washer 14	8	
05	69033319	GB/T5786-M14*1.5*35-8.8J	Bolt M14×1.5×30	8	
06	69000103	GB/T6170-M10-8J	Nut M10	1	
07	69000128	GB/T5783-M10*30-8.8J	Bolt M10×30	1	

图59/Fig59.

货叉架(三级全自由)/LIFT BRACKET (FULL FREE 3 STAGE MAST)

FD18T-C4WE3	FD18T-C4WV3	FD18T-C4W（6）3
FD25T-C4WE3	FD25T-C4WV3	FD25T-C4W（6）3
FD35T-C4WE3	FD35T-C4WV3	FD35T-C4W（6）3

序号	物料ID	代号	名称	数量	备注
Item No.	ID.	Part No.	Descripition	Q'ty	Remark
01	69103695	18B84-01000-Black	Fork carriage	1	1.8t
-	69106662	25BY84-01000-Black	Fork carriage	1	2.5t
-	69109064	35BY84-01000-Black	Fork carriage	1	3.5t
02	69120266	18B80-02000-Black	Backrest	1	1.8t
-	69103609	25BY80-01000-Black	Backrest	1	2.5t
-	69112181	30380A-02000/1.5-Black	Backrest	1	3.5t
03	69005111	GB/T93-14	Washer 14	8	
04	69038580	GB/T5786-M14*1.5*25-8.8J	Bolt M14×1.5×25	8	
05	69020211	A25780-06000	Combination roller 760211K1T	6	1.8t
-	69021690	M3038007000	Combination roller 760311NT	4	2.5t、3.5t
06	69000103	GB/T6170-M10-8J	Nut M10	1	
07	69000128	GB/T5783-M10*30-8.8J	Bolt M10×30	1	

图60/Fig60.

门架(基本型)/MAST(NORMAL MAST)

FD18T-C4WE3 FD18T-C4WV3 FD18T-C4W（6）3

FD25T-C4WE3 FD25T-C4WV3 FD25T-C4W（6）3

FD35T-C4WE3 FD35T-C4WV3 FD35T-C4W（6）3

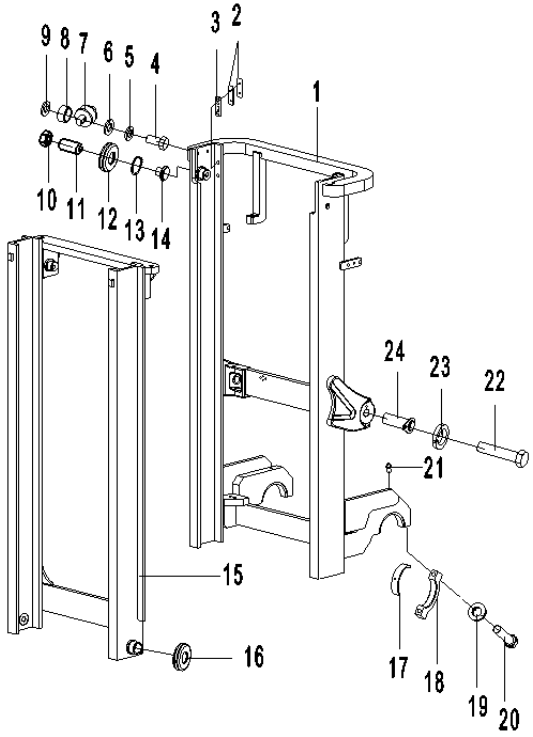

序号	物料ID	代号	名称	数量	备注
Item No.	ID.	Part No.	Descripition	Q'ty	Remark
01	N/A	18BY80-01000	Outer mast ass'y	1	1.8t
-	N/A	25BY80-04000	Outer mast ass'y	1	2.5t
-	N/A	35BY80-02000	Outer mast ass'y	1	3.5t
02	69009498	M3038000004/0.5	Auguesting washer I	2组	
03	69034185	A30480-00001	Slipper	2	
04	69024917	GB/T5786-M10*1.25*45-8.8J	Bolt M10×1.25×45	4	2.5t、3.5t
05	69000053	GB/T93-10	Washer 10	4	2.5t、3.5t
06	69000250	GB/T97.1-10	Washer 10	4	2.5t、3.5t
07	69021881	M3038010000	Side roller C2-3	2	2.5t、3.5t
08	69008569	M3038000005	Washer	4	2.5t、3.5t
09	69012066	M3038000006/0.5	Auguesting washer II	2组	2.5t、3.5t
10	69011485	GB/T6171-M10*1-8J	Nut M10×1	2	
11	69021681	GB/T79-M10*1*45	Screw M10×1×45	2	
12	69020211	A25780-06000	Combination roller 760211K1T	4	1.8t
-	69002362	M3038008000	Roller 130309KT	2	2.5t、3.5t
13	69000071	GB/T894.1-Φ45	Snap ring 45	2	
14	69012654	M3038000010	Shim	2	
15	N/A	18B80-06000	Inter mast ass'y	1	1.8t
-	N/A	25BY80-03000	Inter mast ass'y	1	2.5t
-	N/A	35B80-05000	Inter mast ass'y	1	3.5t
16	69021690	M3038007000	Combination roller 760311NT	2	2.5t、3.5t
17	69012068	M3038000002	Bearing liner	2	1.8t
-	69042241	20B80-00001	Bearing liner	2	2.5t、3.5t
18	69004874	M3038000001	Bearing cap	2	
19	69000056	GB/T93-16	Washer 16	4	

图60/Fig60.

门架(基本型)/MAST(NORMAL MAST)

FD18T-C4WE3 FD18T-C4WV3 FD18T-C4W（6）3

FD25T-C4WE3 FD25T-C4WV3 FD25T-C4W（6）3

FD35T-C4WE3 FD35T-C4WV3 FD35T-C4W（6）3

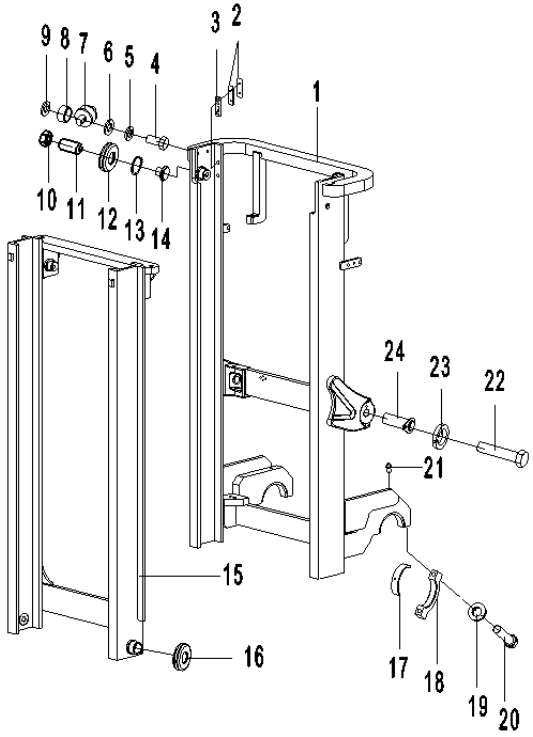

序号	物料ID	代号	名称	数量	备注
Item No.	ID.	Part No.	Descripition	Q'ty	Remark
20	69020214	GB/T5786-M16*1.5*40-8.8J	Bolt M16×1.5×70	4	
21	69003941	JB/T7940.1-M10*1	Nipple M10×1	2	
22	69000123	GB/T5783-M10*20-8.8J	Bolt M10×20	2	
23	69000053	GB/T93-10	Washer 10	4	
24	69006418	M3038012000	Pin shaft	2	1.8t
-	69034183	A30480-04000	Pin shaft	2	2.5t、3.5t

图60/Fig60.

门架(基本型)/MAST(NORMAL MAST)

FD18T-C4WE3 FD18T-C4WV3 FD18T-C4W（6）3

FD25T-C4WE3 FD25T-C4WV3 FD25T-C4W（6）3

FD35T-C4WE3 FD35T-C4WV3 FD35T-C4W（6）3

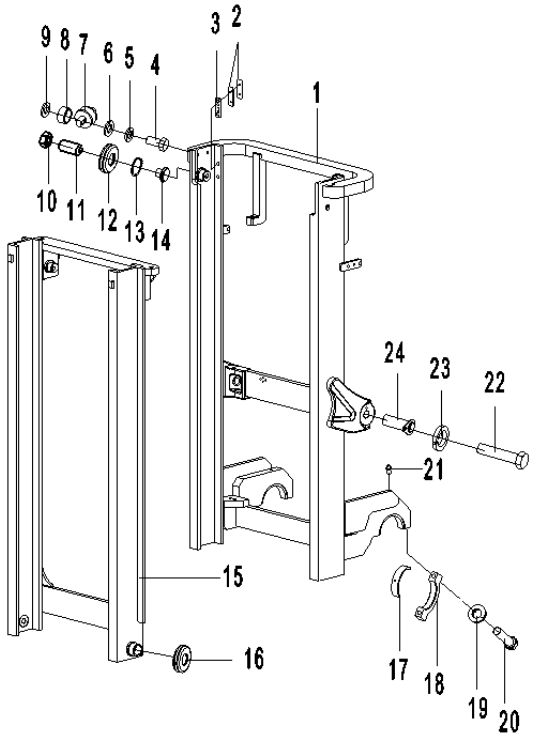

外门架选用表 Mast Opitional Parts

起升高度LIFTING HEIGHT	物料ID ID.	1.8T	物料ID ID.	2.0T	备注 REMARK
2700	69109229	18BY80-01000-2.7M-Black	69103924	000-2	
3000	69109230	18BY80-01000-3.0M-Black	69103928	000-3	标准
3300	69103892	18BY80-01000-3.3M-Black	69103925	000-3	
3500	69103893	18BY80-01000-3.5M-Black	69103926	000-3	
3700	69103894	18BY80-01000-3.7M-Black	69103927	000-3	
4000	69103895	18BY80-01000-4.0M-Black	69103930	000-4	
4500	69103896	18BY80-01000-4.5M-Black	69103929	000-4	

图60/Fig60.

门架(基本型)/MAST(NORMAL MAST)

FD18T-C4WE3 FD18T-C4WV3 FD18T-C4W（6）3

FD25T-C4WE3 FD25T-C4WV3 FD25T-C4W（6）3

FD35T-C4WE3 FD35T-C4WV3 FD35T-C4W（6）3

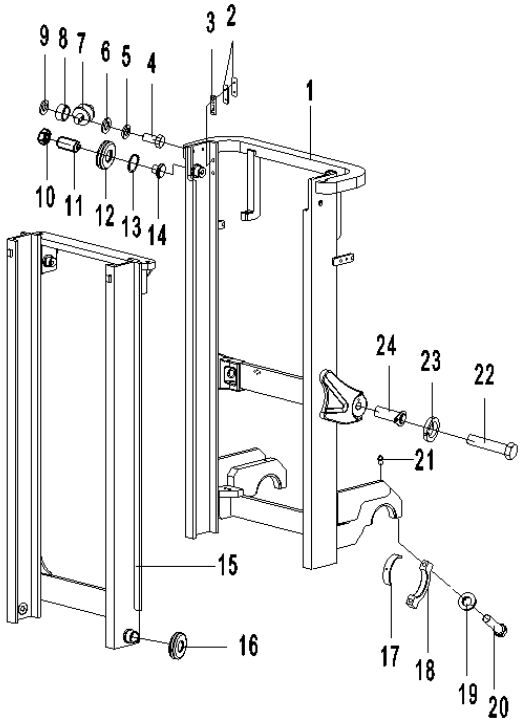

外门架选用表 Mast Opitional Parts

起升高度LIFTING HEIGHT	物料ID ID.	3.5T			备注 REMARK
2700	69103974	35BY80-02000-2.7M-Black			
3000	69103976	35BY80-02000-3.0M-Black			标准
3300	69103977	35BY80-02000-3.3M-Black			
3500	69103978	35BY80-02000-3.5M-Black			
3700	69103979	35BY80-02000-3.7M-Black			
4000	69103980	35BY80-02000-4.0M-Black			
4500	69103981	35BY80-02000-4.5M-Black			

图60/Fig60. 门架(基本型)/MAST(NORMAL MAST)

FD18T-C4WE3 FD18T-C4WV3 FD18T-C4W（6）3

FD25T-C4WE3 FD25T-C4WV3 FD25T-C4W（6）3

FD35T-C4WE3 FD35T-C4WV3 FD35T-C4W（6）3

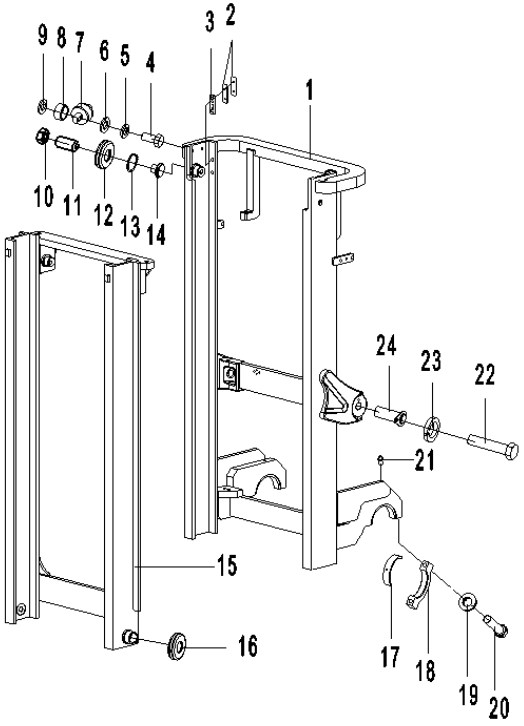

内门架选用表 Mast Opitional Parts

起升高度LIFTING HEIGHT	物料ID ID.	1.8t	物料ID ID.	2.0t	备注 REMARK
2700	69103709	18B80-06000-2.7M-Black	69103733	000-2	
3000	69103710	18B80-06000-3.0M-Black	69103737	000-3	标准
3300	69103711	18B80-06000-3.3M-Black	69103734	000-3	
3500	69103712	18B80-06000-3.5M-Black	69103735	000-3	
3700	69103713	18B80-06000-3.7M-Black	69103736	000-3	
4000	69103714	18B80-06000-4.0M-Black	69103739	000-4	
4500	69103715	18B80-06000-4.5M-Black	69103738	000-4	

图60/Fig60. 门架(基本型)/MAST(NORMAL MAST)

FD18T-C4WE3 FD18T-C4WV3 FD18T-C4W（6）3

FD25T-C4WE3 FD25T-C4WV3 FD25T-C4W（6）3

FD35T-C4WE3 FD35T-C4WV3 FD35T-C4W（6）3

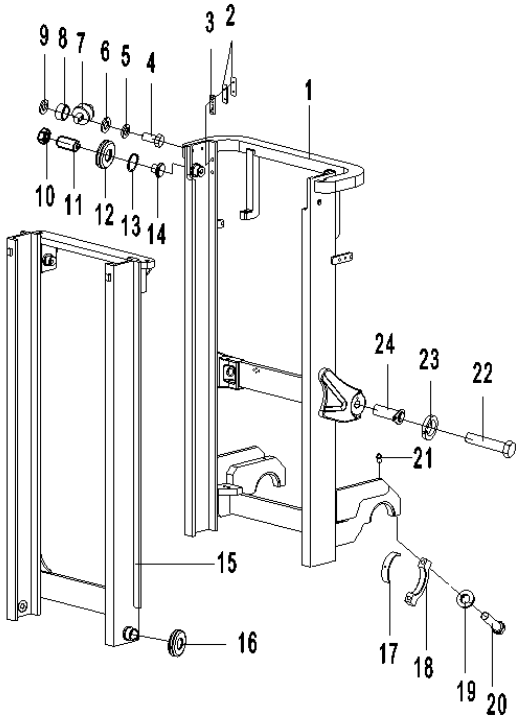

内门架选用表 Mast Opitional Parts

起升高度LIFTING HEIGHT	物料ID ID.	3.5t			备注 REMARK
2700	69103748	35B80-05000-2.7M-Black			
3000	69103749	35B80-05000-3.0M-Black			标准
3300	69103750	35B80-05000-3.3M-Black			
3500	69103751	35B80-05000-3.5M-Black			
3700	69103752	35B80-05000-3.7M-Black			
4000	69103753	35B80-05000-4.0M-Black			
4500	69103754	35B80-05000-4.5M-Black			

图61/Fig61. 门架(二级全自由)/MAST(FULL FREE 2-STAGE MAST)

FD35T-C4WE3 FD35T-C4WV3 FD35T-C4W（6）3

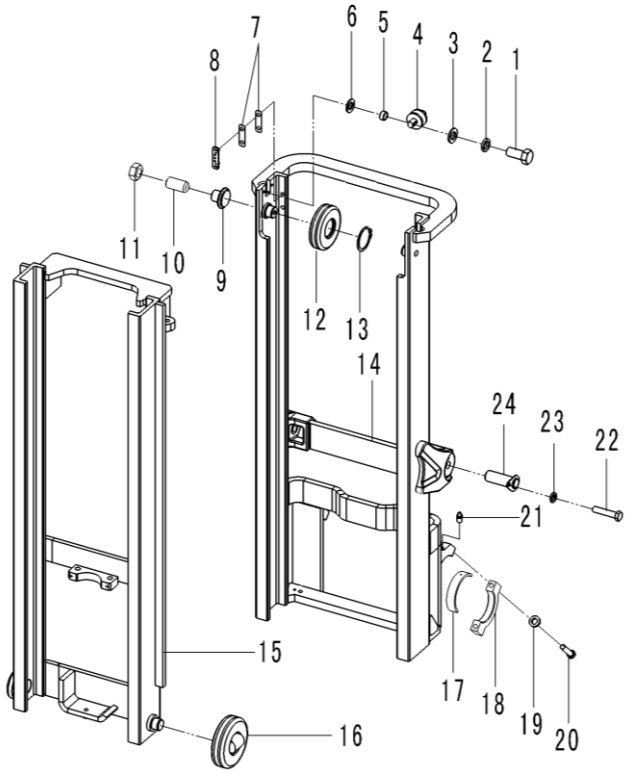

序号	物料ID	代号	名称	数量	备注
Item No.	ID.	Part No.	Description	Q'ty	Remark
01	69024917	GB/T5786-M10*1.25*45-8.8J	Bolt M10×1.25×45	4	
02	69000053	GB/T93-10	washer 10	4	
03	69000250	GB/T97.1-10	washer 10	4	
04	69021881	M3038010000	Side roller C2-3	2	
05	69008569	M3038000005	Washer	4	
06	69012066	M3038000006/0.5	Adjusting washerⅡ	2组	
07	69009498	M3038000004/0.5	Adjusting washer	AR	
08	69034185	A30480-00001	Slipper	2	
09	69012654	M3038000010	Adjusting shim	2	
10	69021681	GB/T79-M10*1*45	Screw M10×1×45	2	
11	69011485	GB/T6171-M10*1-8J	Nut M10×1	2	
12	69002362	M3038008000	Roller 130309KT	2	
13	69000071	GB/T894.1-Φ45	Snap ring 45	2	
14	N/A	35BY82-02000	Outer mast ass'y	1	
15	N/A	35B82-05000	Inner mast ass'y	1	2017.10至
-	N/A	35B82-05000A	Inner mast ass'y	1	2017.10起
16	69021690	M3038007000	Combination roller 760311NT	2	
17	69042241	20B80-00001	Bearing liner	2	
18	69004874	M3038000001	Bearing cap	2	
19	69000056	GB/T93-16	Washer 16	4	
20	69042802	GB/T5785-M16*1.5*70-8.8J	Bolt M16×1.5×70	4	
21	69003941	JB/T7940.1-M10*1	Nipple M10×1	2	
22	69000123	GB/T5783-M10*20-8.8J	Bolt M10×20	2	
23	69000053	GB/T93-10	Washer 10	2	
24	69034183	A30480-04000	Pin shaft	2	

图61/Fig61. 门架(二级全自由)/MAST(FULL FREE 2-STAGE MAST)

FD35T-C4WE3 FD35T-C4WV3 FD35T-C4W（6）3

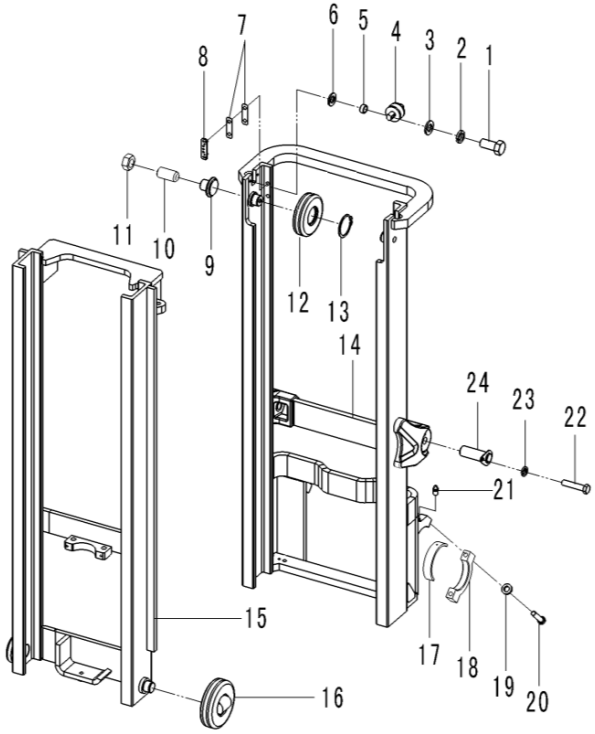

门架选用表 Mast Opitional Parts

起升高度LIFTING HEIGHT	物料ID ID.	外门架总成 OUTER MAST	物料ID ID.	内门架总成	备注 REMARK
3000	69103982	35BY82-02000-3.0M-Black	69103755	00A-3	
3300	69103983	35BY82-02000-3.3M-Black	69103756	00A-3	
3500	69103985	35BY82-02000-3.5M-Black	69103757	00A-3	
3700	69103986	35BY82-02000-3.7M-Black	69103758	00A-3	
4000	69103987	35BY82-02000-4.0M-Black	69103759	00A-4	
4500	69103988	35BY82-02000-4.5M-Black	69103760	00A-4	

图61/Fig61. 门架(二级全自由)/MAST(FULL FREE 2-STAGE MAST)

FD35T-C4WE3 FD35T-C4WV3 FD35T-C4W（6）3

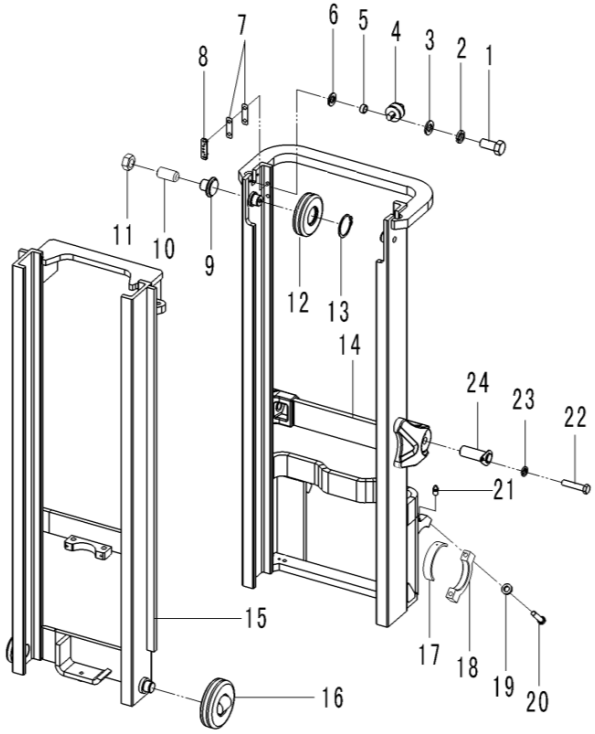

门架选用表 Mast Opitional Parts

起升高度LIFTING HEIGHT	物料ID ID.	内门架总成 INNER MAST			备注 REMARK
3000	69098331	35B82-05000A/3.0			
3300	69098332	35B82-05000A/3.3			
3500	69098333	35B82-05000A/3.5			
3700	69098334	35B82-05000A/3.7			
4000	69098335	35B82-05000A/4.0			
4500	69098336	35B82-05000A/4.5			

图62/Fig62.

FD18T-C4WE3 FD18T-C4WV3 FD18T-C4W（6）3

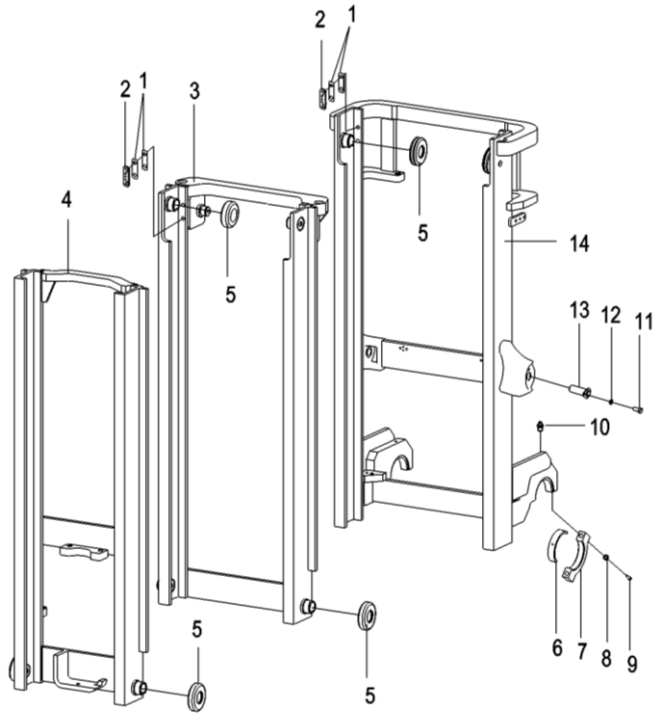

门架(三级全自由)/MAST(FULL FREE 3-STAGE MAST)

序号 Item No.	物料ID ID.	代号 Part No.	名称 Descripition	数量 Q'ty	备注 Remark
01	69009498	M3038000004/0.5	Auguesting washer I	4组	
02	69034185	A30480-00001	Slipper	2	
03	N/A	18B84-03000	Middle mast ass'y	1	
04	N/A	18B84-02000	Inter mast ass'y	1	
05	69020211	A25780-06000	Combination roller 760211K1T	8	
06	69012068	M3038000002	Bearing liner	2	
07	69004874	M3038000001	Bearing cap	2	
08	69000056	GB/T93-16	Washer16	4	
09	69042802	GB/T5785-M16*1.5*70-8.8J	Bolt M16×1.5×70	4	
10	69003941	JB/T7940.1-M10*1	Nipple M10×1	2	
11	69000123	GB/T5783-M10*20-8.8J	Bolt M10×20	2	
12	69000053	GB/T93-10	Washer10	2	
13	69034183	A30480-04000	Pin shaft	2	
14	N/A	18BY84-01000	Outer mast ass'y	1	

图62/Fig62.

门架(三级全自由)/MAST(FULL FREE 3-STAGE MAST)

FD18T-C4WE3　　FD18T-C4WV3　　FD18T-C4W（6）3

1.8t门架选用表 Mast Opitional Parts

起升高度LIFTING HEIGHT	物料ID ID.	外门架 Outer mast ass'y	物料ID ID.	中门架 Middle	备注 REMARK
3600	69103901	18BY84-01000-3.6M-Black	69104015	00-3	
4000	69103902	18BY84-01000-4.0M-Black	69104016	00-4	标准
4350	69103903	18BY84-01000-4.35M-Black	69104017	00-4.	
4500	69103904	18BY84-01000-4.5M-Black	69104018	00-4	
4800	69103906	18BY84-01000-4.8M-Black	69104020	00-4	
5000	69103907	18BY84-01000-5.0M-Black	69104021	00-5	
5500	69103908	18BY84-01000-5.5M-Black	69104023	00-5	
6000	69103900	18BY84-01000-6.0M-Black	69104024	00-6	
6500	69103909	18BY84-01000-6.5M-Black	69104025	00-6	

图62/Fig62.

门架(三级全自由)/MAST(FULL FREE 3-STAGE MAST)

FD18T-C4WE3 FD18T-C4WV3 FD18T-C4W（6）3

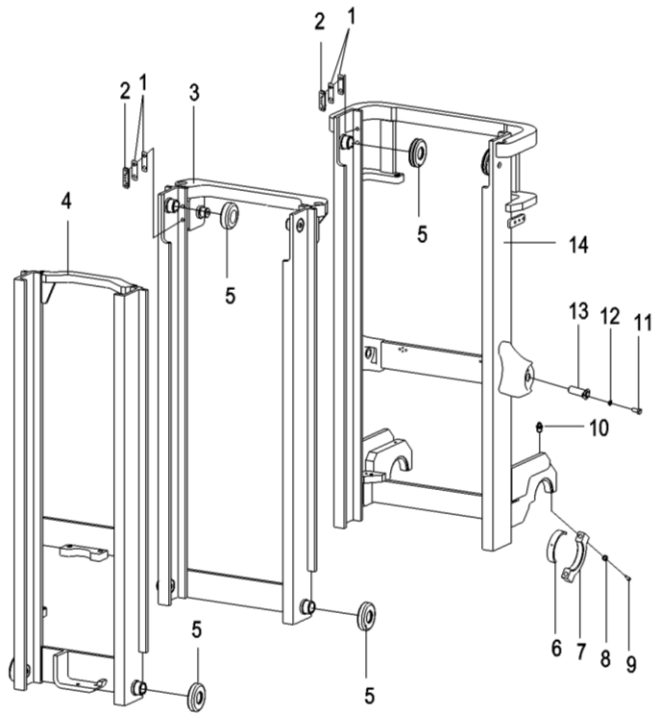

1.8t门架选用表 Mast Opitional Parts

起升高度LIFTING HEIGHT	物料ID ID.	内门架 Inter mast ass'y	物料ID ID.		备注 REMARK
3600	69103787	18B84-02000-3.6M-Black			
4000	69103788	18B84-02000-4.0M-Black			
4350	69103789	18B84-02000-4.35M-Black			
4500	69103790	18B84-02000-4.5M-Black			
4800	69103792	18B84-02000-4.8M-Black			
5000	69103793	18B84-02000-5.0M-Black			
5500	69103794	18B84-02000-5.5M-Black			
6000	69103795	18B84-02000-6.0M-Black			
6500	69103796	18B84-02000-6.5M-Black			

图63/Fig63.

FD25T-C4WE3 FD25T-C4WV3 FD25T-C4W（6）3

FD35T-C4WE3 FD35T-C4WV3 FD35T-C4W（6）3

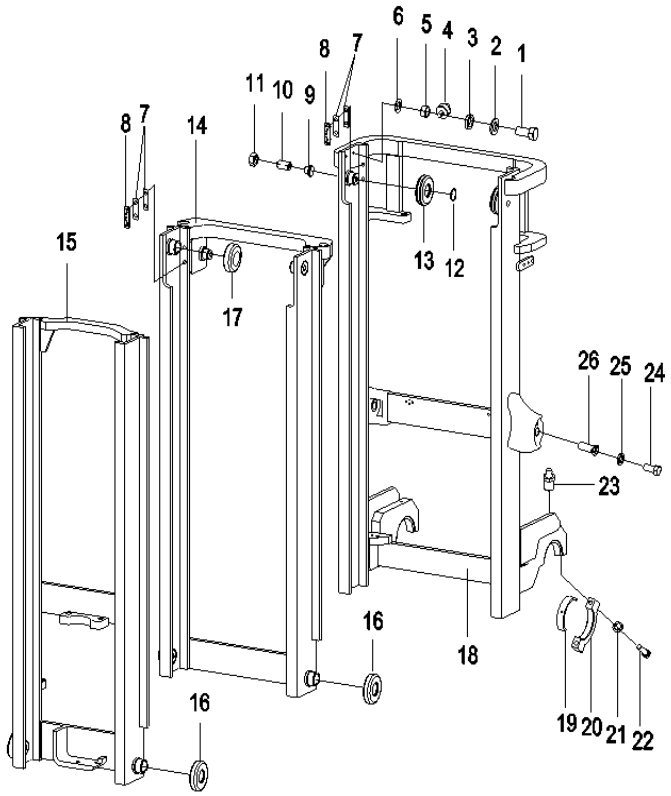

门架(三级全自由)/MAST(FULL FREE 3-STAGE MAST)

序号 Item No.	物料ID ID.	代号 Part No.	名称 Descripition	数量 Q'ty	备注 Remark
01	69011886	GB/T5786-M10*1.25*25	Bolt M10×1.25×25	4	
02	69000053	GB/T93-10	Washer 10	4	
03	69000250	GB/T97.1-10	Washer 10	4	
04	69021881	M3038010000	Side roller C2-3	2	
05	69008569	M3038000005	Washer	4	
06	69012066	M3038000006/0.5	Auguesting washer Ⅱ	2组	
07	69009498	M3038000004/0.5	Auguesting washer Ⅰ	4组	
08	69034185	A30480-00001	Slipper	2	
09	69012654	M3038000010	Shim	2	
10	69006729	GB/T77-M10*45-12.9J	Screw M10*45	2	
11	69011485	GB/T6171-M10*1-8J	Nut M10×1	2	
12	69000071	GB/T894.1-Φ45	Snap ring 45	2	
13	69002362	M3038008000	Roller 130309KT	2	
14	N/A	25BY84-03000	Middle mast ass'y	1	2.5t
-	N/A	35B84-05000	Middle mast ass'y	1	3.5t
15	N/A	25BY84-02000	Inter mast ass'y	1	2.5t(2017.10至)
-	N/A	25BY84-02000A	Inter mast ass'y	1	2.5t(2017.10起)
-	N/A	35B84-04000	Inter mast ass'y	1	3.5t(2017.10至)
-	N/A	35B84-04000A	Inter mast ass'y	1	3.5t(2017.10起)
16	69021690	M3038007000	Combination roller 760311NT	4	
17	69021689	M30074006000	Combination roller 760211NT	2	
18	N/A	25BY84-04000	Outer mast ass'y	1	2.5t
-	N/A	35BY84-02000	Outer mast ass'y	1	3.5t
19	69042241	20B80-00001	Bearing liner	2	
20	69004874	M3038000001	Bearing cap	2	

图63/Fig63.

FD25T-C4WE3 FD25T-C4WV3 FD25T-C4W（6）3

FD35T-C4WE3 FD35T-C4WV3 FD35T-C4W（6）3

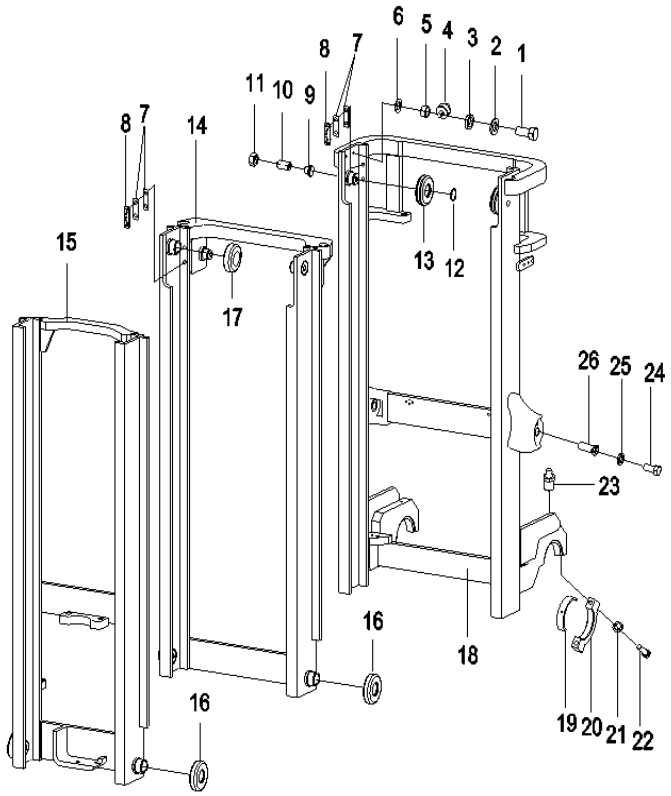

门架(三级全自由)/MAST(FULL FREE 3-STAGE MAST)

序号 Item No.	物料ID ID.	代号 Part No.	名称 Descripition	数量 Q'ty	备注 Remark
21	69000056	GB/T93-16	Washer16	4	
22	69042802	GB/T5785-M16*1.5*70-8.8J	Bolt M16×1.5×70	4	
23	69003941	JB/T7940.1-M10*1	Nipple M10×1	2	
24	69000123	GB/T5783-M10*20-8.8J	Bolt M10×20	2	
25	69000053	GB/T93-10	Washer10	2	
26	69034183	A30480-04000	Pin shaft	2	

图63/Fig63.

门架(三级全自由)/MAST(FULL FREE 3-STAGE MAST)

FD25T-C4WE3 FD25T-C4WV3 FD25T-C4W（6）3

FD35T-C4WE3 FD35T-C4WV3 FD35T-C4W（6）3

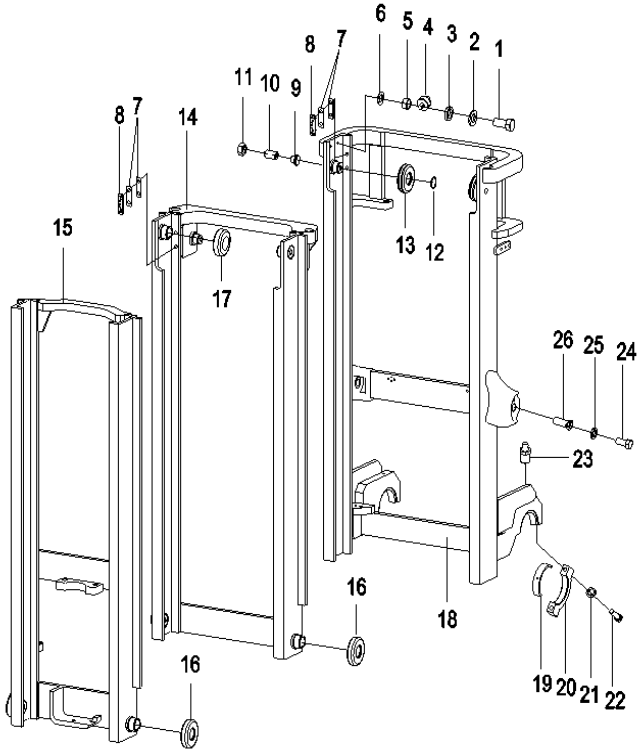

门架选用表 Mast Opitional Parts

起升高度LIFTING HEIGHT	物料ID ID.	外门架总成 OUTER MAST ASS'Y 2.5t	物料ID		备注 REMARK
3700	69103931	25BY84-04000-3.7M-Black	69103989		
4000	69103932	25BY84-04000-4.0M-Black	69103990		
4350	69103933	25BY84-04000-4.35M-Black	69103991		
4700	69103934	25BY84-04000-4.7M-Black	69103992		
5000	69103935	25BY84-04000-5.0M-Black	69103993		
5500	69103936	25BY84-04000-5.5M-Black	69103994		
6000	69103937	25BY84-04000-6.0M-Black	69103995		

图63/Fig63.

门架(三级全自由)/MAST(FULL FREE 3-STAGE MAST)

FD25T-C4WE3 FD25T-C4WV3 FD25T-C4W（6）3

FD35T-C4WE3 FD35T-C4WV3 FD35T-C4W（6）3

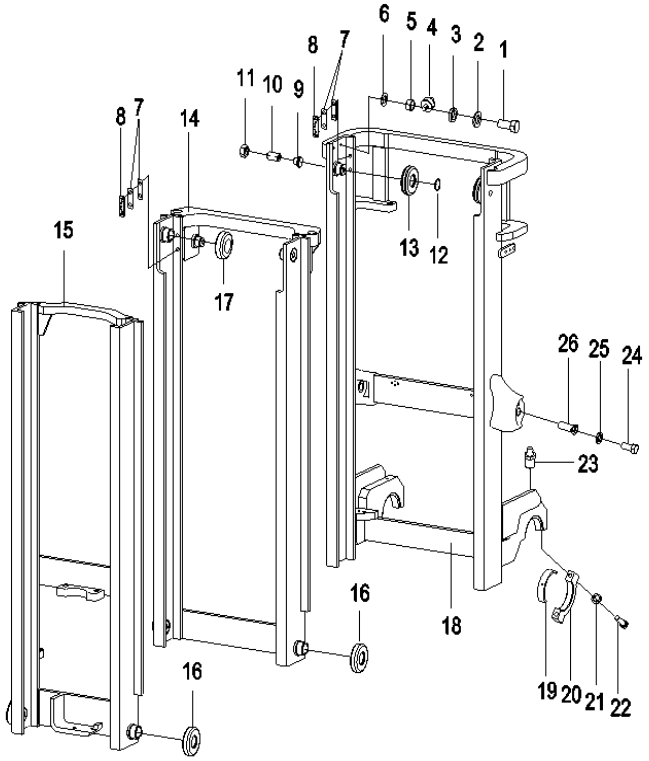

门架选用表 Mast Opitional Parts

起升高度LIFTING HEIGHT	物料ID ID.	中门架总成 MIDDL EMAST ASS'Y 2.5t	物料ID		备注 REMARK
3700	69104034	25BY84-03000-3.7M-Black	69104041		
4000	69104035	25BY84-03000-4.0M-Black	69104042		
4350	69104036	25BY84-03000-4.35M-Black	69104043		
4700	69104037	25BY84-03000-4.7M-Black	69104044		
5000	69104038	25BY84-03000-5.0M-Black	69104045		
5500	69104039	25BY84-03000-5.5M-Black	69104046		
6000	69104040	25BY84-03000-6.0M-Black	69104047		

图63/Fig63.

门架(三级全自由)/MAST(FULL FREE 3-STAGE MAST)

FD25T-C4WE3 FD25T-C4WV3 FD25T-C4W（6）3

FD35T-C4WE3 FD35T-C4WV3 FD35T-C4W（6）3

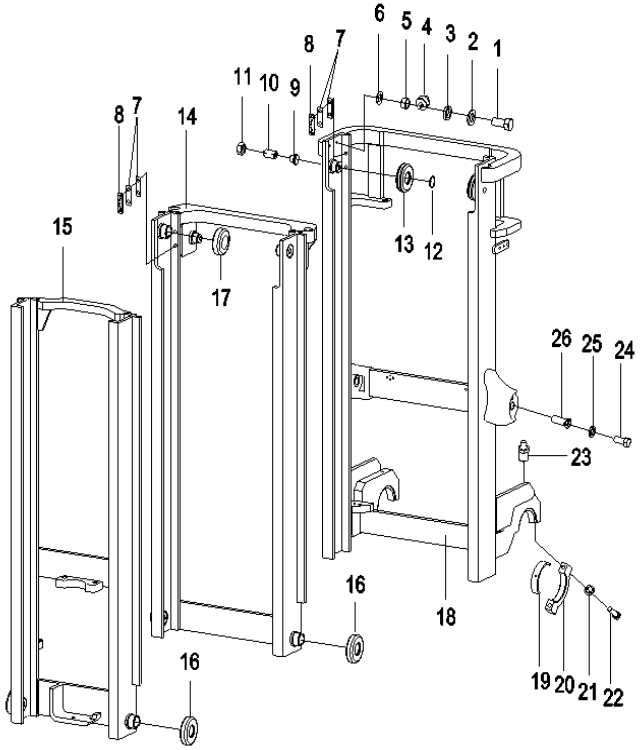

门架选用表 Mast Opitional Parts

起升高度LIFTING HEIGHT	物料ID ID.	内门架总成 INNER MAST ASS'Y 2.5t	物料ID		备注 REMARK
3700	69104034	25BY84-03000-3.7M-Black	69104041		
4000	69104035	25BY84-03000-4.0M-Black	69104042		
4350	69104036	25BY84-03000-4.35M-Black	69104043		
4700	69104037	25BY84-03000-4.7M-Black	69104044		
5000	69104038	25BY84-03000-5.0M-Black	69104045		
5500	69104039	25BY84-03000-5.5M-Black	69104046		
6000	69104040	25BY84-03000-6.0M-Black	69104047		

图63/Fig63.

门架(三级全自由)/MAST(FULL FREE 3-STAGE MAST)

FD25T-C4WE3 FD25T-C4WV3 FD25T-C4W（6）3

FD35T-C4WE3 FD35T-C4WV3 FD35T-C4W（6）3

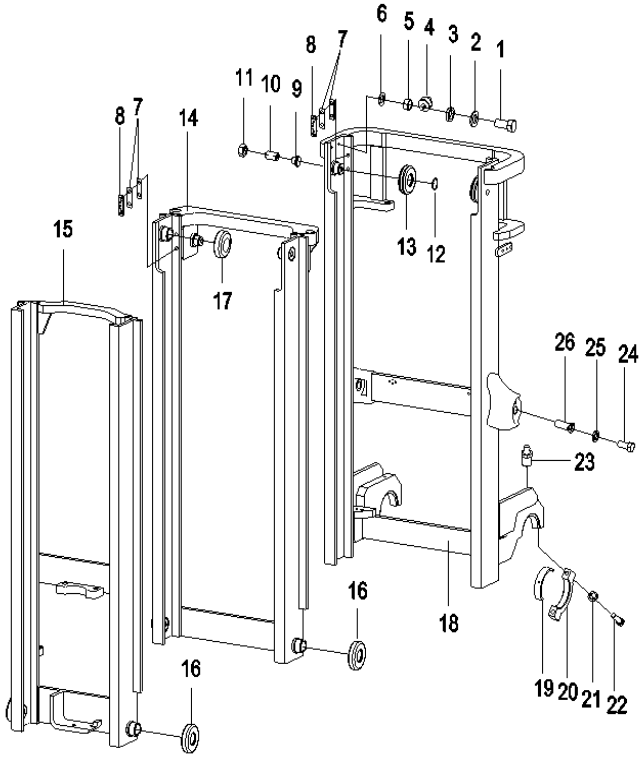

门架选用表 Mast Opitional Parts

起升高度LIFTING HEIGHT	物料ID ID.	内门架总成 INNER MAST ASS'Y 2.5t	物料ID		备注 REMARK
3700	69109226	25BY84-02000A-3.7M-Black	69103761		
4000	69109227	25BY84-02000A-4.0M-Black	69103762		标准
4350	69109228	25BY84-02000A-4.35M-Black	69103763		
4700	69103743	25BY84-02000A-4.7M-Black	69103764		
5000	69103744	25BY84-02000A-5.0M-Black	69103765		
5500	69103745	25BY84-02000A-5.5M-Black	69103766		
6000	69103746	25BY84-02000A-6.0M-Black	69103767		

图64/FIG64. 起升油缸(基本型)/LIFT CYLINDER(NORMAL MAST)

FD18T-C4WE3 FD18T-C4WV3 FD18T-C4W（6）3

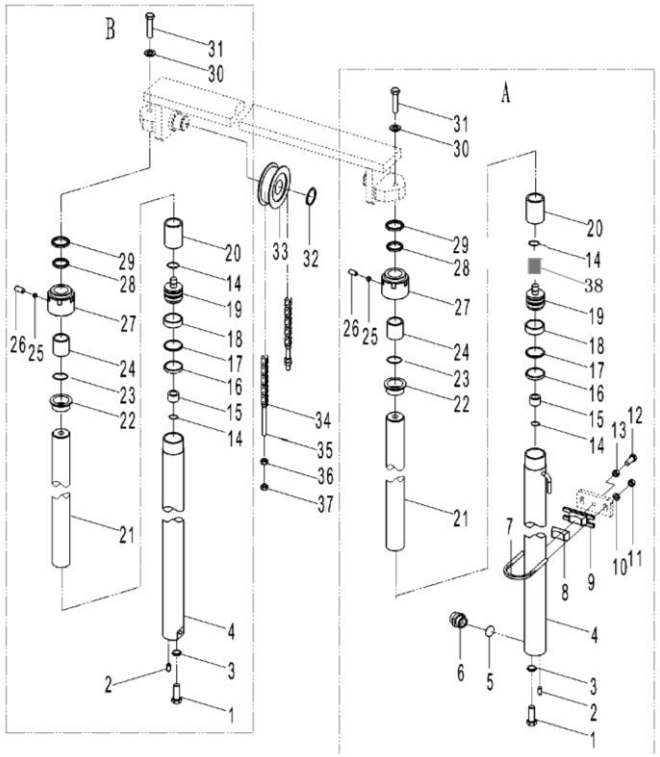

序号 Item No.	物料ID ID.	代号 Part No.	名称 Description	数量 Q'ty	备注 Remark
A	N/A	M1538009000B	Lift cylinder(right)	1	
B	N/A	M1538006000B	Lift cylinder(left)	1	
1	69000137	GB/T5786-M12*1.25*25-8.8J	Bolt M12×1.25×25	2	
2		GB/T119-10*25	Pin 10×25	2	
3	69000054	GB/T93-12	Washer 12	2	
4	N/A	M152J01-100	Cylinder body	2	
5	69124131	GB1235-22*2.4-G	O-ring 22×2.4	1	
6	69135383	A20480-05100	Safety valve	1	
7	69011293	M1538000005	Hoop	2	
8	69012173	M3038000008	Rubber pad	2	
9	69012172	M1538000007	Hoop seat	2	
10	69000250	GB/T97.1-10	Washer 10	4	
11	69000313	GB/T6171-M10*1.25-8J	Nut M10×1.25	4	
12	69000213	GB/T5786-M12*1.25*30-8.8J	Bolt M12×1.25×30	2	
13	69000314	GB/T6171-M12*1.25-8J	Nut M12×1.25	2	
14	69137593	GB/T895.1-24	Snap spring 24	2	
15	69137579	M1538009001	Sleeve	2	
16	69137583	M1538009002	Packing 45×35×6	2	
17	69045601	TLC-15T06	Snap spring Φ45×Φ35×3	2	
18	69137587	M1538009003	Bush bearing ring D45×8×2.5	2	
19	69137580	M1538009004	Piston	2	
20	69137572	M1538009006	Sleeve Φ35×50	按需	
21	N/A	M152J01-1	Piston rod	2	
22	69045601	TLC-15T06	Bushing	2	
23	69137592	GB/T1235-49.7*3.5	O-ring 49.7×3.5	2	

图64/FIG64. 起升油缸(基本型)/LIFT CYLINDER(NORMAL MAST)

FD18T-C4WE3 FD18T-C4WV3 FD18T-C4W（6）3

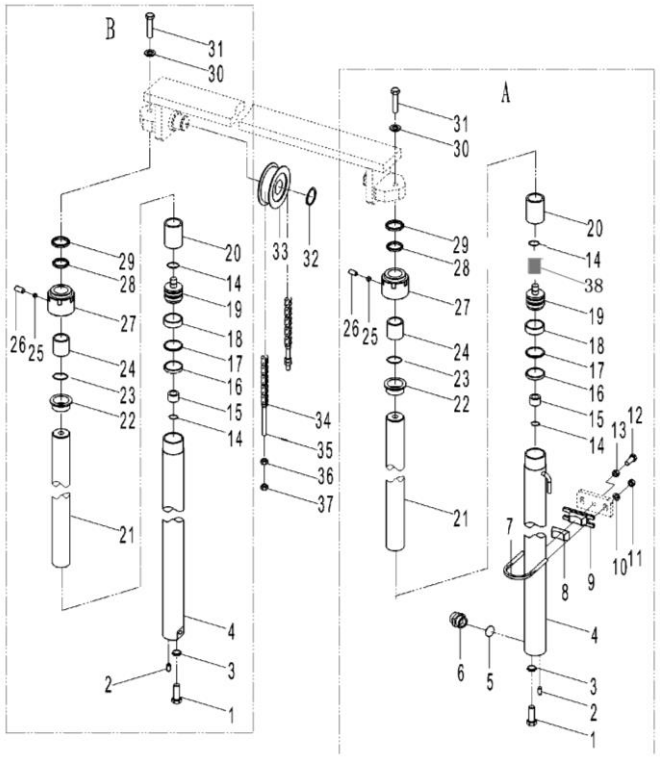

序号 Item No.	物料ID ID.	代号 Part No.	名称 Description	数量 Q'ty	备注 Remark
24	69131593	SF-1 35	Bush bearing 35×39×30	2	
25	69135454	A30480-06014	Nylon padΦ6×3	2	
26	69008637	GB/T77-M8*8-12.9J	Screw M8×8	2	
27	69137578	M1538009005	Cylinder cap	2	
28	69135419	A30480-05010	Packing 35×45×6	2	
29	69084681	40Z80D-00009	Dust-proof seal 35×45×5/6.5	2	
30	69005111	GB/T93-14	Washer 14	2	
31	69033319	GB/T5786-M14*1.5*35-8.8J	Bolt M14×1.5×35	2	
32	69000070	GB/T894.1-Φ40	Snap spring40	2	
33	69003517	M1538013000	Chain roller 780708K1	2	
34	N/A	18B80-01000	Chain	2	
35	69006388	GB/T91-20002.5*12	Cotter pin 2.5×12	4	
36	69003517	M1538013000	Spherical nut M14×1.5	4	
37	69000316	GB/T6171-M14*1.5-8J	Nut M14×1.5	4	
38	69135384	A20480-05200	Spool	2	

图64/FIG64.	起升油缸(基本型)/LIFT CYLINDER(NORMAL MAST)			

FD18T-C4WE3 FD18T-C4WV3 FD18T-C4W（6）3

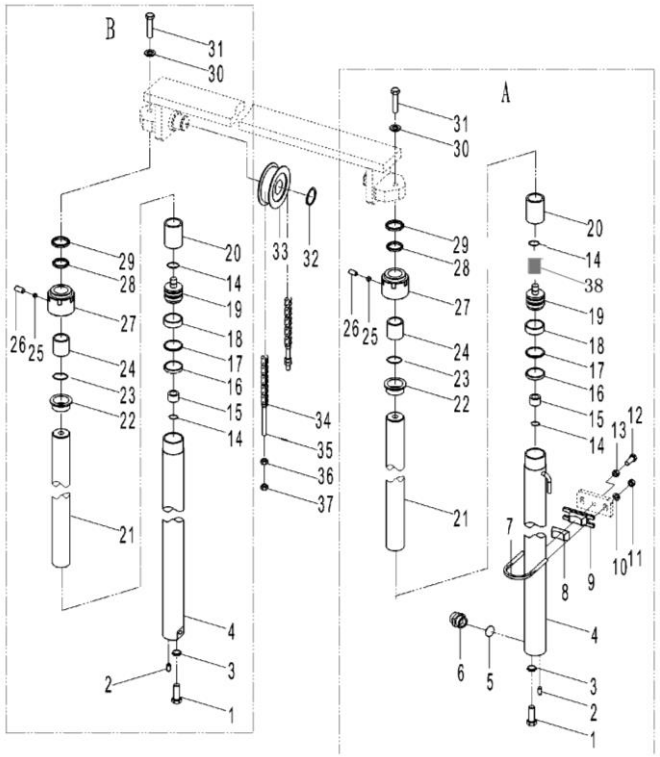

起升油缸选用件(基本型)
LIFT CYLINDER OPTION TABLE(NOMAL MAST)

起升高度 LIFTING HEIGHT	物料ID ID.	左起升油缸 Lift cylinder L.H.	物料ID ID.	备注 REMARKS
2700	69048356	M1538006000-2.7M	69103500	
3000	69006176	M1538006000-3.0M	69102426	
3300	69005805	M1538006000-3.3M	69102425	
3500	69009846	M1538006000-3.5M	69102625	
3700	69009322	M1538006000-3.7M	69102455	
4000	69002877	M1538006000-4.0M	69102418	
4500	69009168	M1538006000-4.5M	69102452	
5000	69048352	M1538006000-5.0M	69103479	
5500	69041114	M1538006000-5.5M	69103231	
6000	69048353	M1538006000-6.0M	69103482	

图64/FIG64.	起升油缸(基本型)/LIFT CYLINDER(NORMAL MAST)			

FD18T-C4WE3 FD18T-C4WV3 FD18T-C4W（6）3

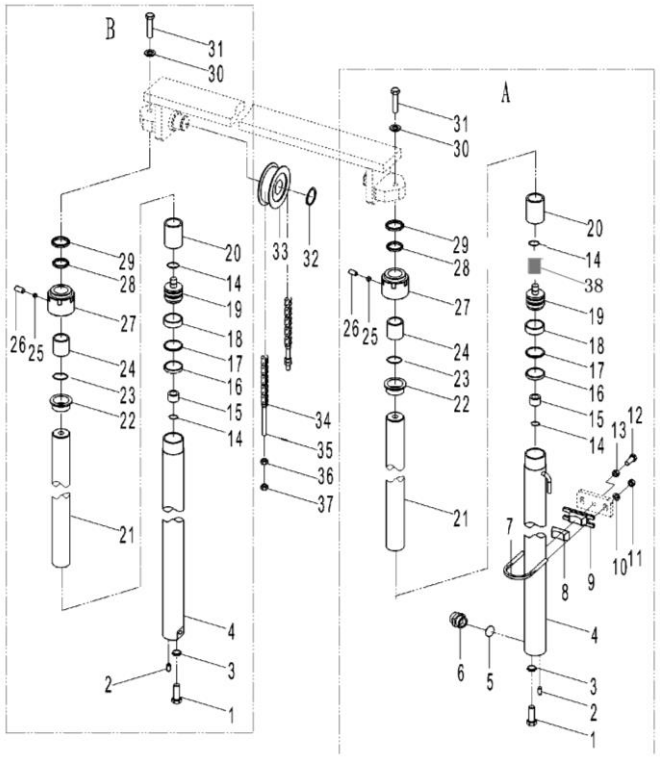

起升油缸选用件(基本型)
LIFT CYLINDER OPTION TABLE(NOMAL MAST)

起升高度 LIFTING HEIGHT	物料ID ID.	链条总成 Chain Ass'y		备注 REMARKS
2700	69117003	18B80-01000-2.7		
3000	69117004	18B80-01000-3.0		标准
3300	69117005	18B80-01000-3.3		
3500	69117006	18B80-01000-3.5		
3700	69117007	18B80-01000-3.7		
4000	69117008	18B80-01000-4.0		
4500	69117009	18B80-01000-4.5		
5000	69117010	18B80-01000-5.0		
5500	69117011	18B80-01000-5.5		
6000	69117012	18B80-01000-6.0		

图65/Fig65. 起升油缸(基本型)/LIFT CYLINDER(NORMAL MAST)

FD25T-C4WE3 FD25T-C4WV3 FD25T-C4W（6）3

FD35T-C4WE3 FD35T-C4WV3 FD35T-C4W（6）3

序号 Item No.	物料ID ID.	代号 Part No.	名称 Descripition	数量 Q'ty	备注 Remark
A	N/A	A20480-05000B	Lift cylinder(right)	1	2.5t
-	N/A	A30480-06000B	Lift cylinder(right)	1	3.5t
B	N/A	A20480-06000B	Lift cylinder(left)	1	2.5t
-	N/A	A30480-07000B	Lift cylinder(left)	1	3.5t
1	69000137	GB/T5786-M12*1.25*25-8.8J	Bolt M12×1.25×25	2	
2		GB/T119-10*25	Pin 10×25	2	
3	69000054	GB/T93-12	Washer 12	2	
4	N/A	Max202J01A-100	Cylidiner body	2	2.5t
-	N/A	Max302J01A-100	Cylidiner body	2	3.5t
5	69124131	GB1235-22*2.4-G	O-ring 22×2.4	1	
6	69135383	A20480-05100	Safety valve	1	2.5t
-	69135455	A30480-06100	Safety valve	1	3.5t
7	-	A20480-00001	Hoop	2	2.5t
-	69006791	M3038000007	Hoop	2	3.5t
8	69012173	M3038000008	Rubber pad	2	2.5t
-	69012173	M3038000008	Rubber pad	2	3.5t
9	69034152	A30480-00003	Hoop seat	2	2.5t
-	69034152	A30480-00003	Hoop seat	2	3.5t
10	69000250	GB/T97.1-10	Washer 10	4	
11	69000313	GB/T6171-M10*1.25-8J	Nut M10×1.25	4	
12	69000140	GB/T5786-M12*1.25*45-8.8J	Bolt M12×1.25×45	2	
13	69000314	GB/T6171-M12*1.25-8J	Nut M12×1.25	2	
14	69130898	GB/T895.1-30	Snap ring 30	4	2.5t
-	69133213	M452J01-5	Snap ring 35	4	3.5t
15	69033161	LS33161	Sleeve	2	2.5t

图65/Fig65.			起升油缸(基本型)/LIFT CYLINDER(NORMAL MAST)					
FD25T-C4WE3	FD25T-C4WV3	FD25T-C4W（6）3	序号	物料ID	代号	名称	数量	备注
FD35T-C4WE3	FD35T-C4WV3	FD35T-C4W（6）3	Item No.	ID.	Part No.	Descripition	Q'ty	Remark
			-		D5A000-15E01-5	Sleeve		3.5t
			16	69135377	A20480-05008	Packing 50×40×6	2	2.5t
			-	69135450	A30480-06010	Packing 56×45×7	2	3.5t
			17	N/A	Max202J01A-001	Snap ring Φ50×Φ40×3	2	2.5t
			-	69135449	A30480-06009	Snap ring Φ56×Φ45×3	2	3.5t
			18	69136174	MAX202J01A-002	Bearing ring D50×8×2.5	2	2.5t
			-	69020038	LS20038	Bearing ring D56×8×2.5	2	3.5t
			19	69136195	TLC-20T02	Piston	2	2.5t
			-	N/A	TLC-30T02	Piston	2	3.5t
			20	69136811	TLC-20T11	Sleeve Φ40×50	按需	2.5t
			-	69136812	TLC-30T18	Sleeve Φ45×50	按需	3.5t
			21	N/A	Max202J01-1	Piston rod	2	2.5t
			-	N/A	Max302J01-1	Piston rod	2	3.5t
			22	69135373	A20480-05004	Bushing	2	2.5t
			-	69135444	A30480-06004	Bushing	2	3.5t
			23	69024340	GB1235-60*3.1	O-ring 60×3.1	2	2.5t
			-	69009541	LS9541	O-ring 68×3.1	2	3.5t
			24	69135380	A20480-05011	Bush bearing 40×44×30	2	2.5t
			-	69136452	SF-1-02	Bush bearing 45×50×30	2	3.5t
			25	69135454	A30480-06014	Nylon pad Φ6×3	2	
			26	69008637	GB/T77-M8*8-12.9J	Screw M8×8	2	2.5t
			-	69094109	GB/T73-1985	Screw M8×6	2	3.5t
			27	69135372	A20480-05003	Cylinder cap	2	2.5t
			-	69135443	A30480-06003	Cylinder cap	2	3.5t
			28	69135378	A20480-05009	Packing 40×50×7	2	2.5t

图65/Fig65. 起升油缸(基本型)/LIFT CYLINDER(NORMAL MAST)

FD25T-C4WE3 FD25T-C4WV3 FD25T-C4W（6）3

FD35T-C4WE3 FD35T-C4WV3 FD35T-C4W（6）3

序号 Item No.	物料ID ID.	代号 Part No.	名称 Descripition	数量 Q'ty	备注 Remark
-	69135451	A30480-06011	Packing 45×55×7	2	3.5t
29	69135379	A20480-05010	Dust-proof seal 40×52×7/10	2	2.5t
-	69135452	A30480-06012	Dust-proof seal 45×57×7/10	2	3.5t
30	69000056	GB/T93-16	Washer 16	2	
31	69000166	GB/T5786-M16*1.5*50-8.8J	Bolt M16×1.5×50	2	
32	69000070	GB/T894.1-Φ40	Snap ring 40	2	
33	69021881	M3038010000	Chain roller	2	2.5t
-	69007748	M3538006000	Chain roller	2	3.5t
34	N/A	20B80-01000	Chain	2	2.5t
-	N/A	35B80-01000	Chain	2	3.5t
35	69017915	GB/T91-3.2*40	Cotter Pin 3.2×40	4	
36	69107732	M3038001001	Nut M18×1.5	4	2.5t
-	69012580	M3538001001	Nut M22×1.5	4	3.5t
37	69000004	GB/T6171-M18*1.5-8J	Nut M18×1.5	4	2.5t
-	69136816	GB/T6171-2000-M22*1.5	Nut M22×1.5	4	3.5t

图65/Fig65.	起升油缸(基本型)/LIFT CYLINDER(NORMAL MAST)

FD25T-C4WE3 FD25T-C4WV3 FD25T-C4W（6）3

FD35T-C4WE3 FD35T-C4WV3 FD35T-C4W（6）3

2.5t起升油缸选用件(基本型)
LIFT CYLINDER OPTION TABLE(NOMAL MAST)

起升高度 LIFTING HEIGHT	物料ID ID.	左起升油缸 Lift cylinder L.H.	物料ID ID.	备注 REMARKS
2700	69103274	A20480-06000-2.7M	69042274	
3000	69103221	A20480-06000-3.0M	69039626	
3300	69103222	A20480-06000-3.3M	69039627	
3500	69103223	A20480-06000-3.5M	69039628	
3700	69103275	A20480-06000-3.7M	69042275	
4000	69103224	A20480-06000-4.0M	69039629	
4500	69103226	A20480-06000-4.5M	69039631	

图65/Fig65.	起升油缸(基本型)/LIFT CYLINDER(NORMAL MAST)

FD25T-C4WE3 FD25T-C4WV3 FD25T-C4W（6）3

FD35T-C4WE3 FD35T-C4WV3 FD35T-C4W（6）3

2.5t起升油缸选用件(基本型)
LIFT CYLINDER OPTION TABLE(NOMAL MAST)

起升高度 LIFTING HEIGHT	物料ID ID.	链条总成 Chain Ass'y		备注 REMARKS
2700	69117118	20B80-01000-2.7		
3000	69117117	20B80-01000-3.0		
3300	69117116	20B80-01000-3.3		
3500	69117115	20B80-01000-3.5		
3700	69117114	20B80-01000-3.7		
4000	69117112	20B80-01000-4.0		
4500	69117113	20B80-01000-4.5		

图65/Fig65.	起升油缸(基本型)/LIFT CYLINDER(NORMAL MAST)

FD25T-C4WE3 FD25T-C4WV3 FD25T-C4W（6）3

FD35T-C4WE3 FD35T-C4WV3 FD35T-C4W（6）3

3.5t起升油缸选用件(基本型)
LIFT CYLINDER OPTION TABLE(NOMAL MAST)

起升高度 LIFTING HEIGHT	物料ID ID.	左起升油缸 Lift cylinder L.H.	物料ID ID.	备注 REMARKS
2700	69103273	A30480-07000-2.7M	69042273	
3000	69103020	A30480-07000-3.0M	69034154	
3300	69103219	A30480-07000-3.3M	69039268	
3500	69103212	A30480-07000-3.5M	69036347	
3700	69103272	A30480-07000-3.7M	69042272	
4000	69103214	A30480-07000-4.0M	69036348	
4500	69103215	A30480-07000-4.5M	69036350	

图65/Fig65.	起升油缸(基本型)/LIFT CYLINDER(NORMAL MAST)

FD25T-C4WE3　FD25T-C4WV3　FD25T-C4W（6）3

FD35T-C4WE3　FD35T-C4WV3　FD35T-C4W（6）3

3.5t起升油缸选用件(基本型)
LIFT CYLINDER OPTION TABLE(NOMAL MAST)

起升高度 LIFTING HEIGHT	物料ID ID.	链条总成 Chain Ass'y		备注 REMARKS
2700	69117170	35B80-01000-2.7		
3000	69117169	35B80-01000-3.0		
3300	69117168	35B80-01000-3.3		
3500	69117167	35B80-01000-3.5		
3700	69117166	35B80-01000-3.7		
4000	69117164	35B80-01000-4.0		
4500	69117165	35B80-01000-4.5		

图66-1/Fig66-1.	前起升油缸(二级全自由)/FRONT LIFT CYLINDER(FULL FREE 2-STAGE MAST)					
FD35T-C4WE3 FD35T-C4WV3 FD35T-C4W（6）3	序号	物料ID	代号	名称	数量	备注
	Item No.	ID.	Part No.	Description	Q'ty	Remark
	A	N/A	M35043007000	Middle cylinder	1	(2017.10至)
	01	N/A	GB/5785-2000	Bolt M16×1.5×85	1	
	02	69000056	GB/T93-16	Washer 16	1	
	03	69106434	M35043000003-Black	Chain hoop	1	
	04	69014856	M35043000002	Roller seat	1	
	05	69007748	M3538006000	Chain roller	2	
	06	69000070	GB/T894.1-Φ40	Snap ring 40	2	
	07	N/A	35B82-01000	Chain ass'y	2	
	08	69017915	GB/T91-3.2*40	Cotter pin 3.2×40	4	
	09	69012580	M3538001001	Nut M22×1.5	4	
	10	69136816	GB/T6171-2000-M22*1.5	Nut M22×1.5	4	
	11	N/A	LBH 95	Dust-proof seal 95×105×6/8	1	
	12	N/A	M453J03-003	Snap ring d95×Φ110×3	1	
	13	N/A	ISI 95	Packing 95×110×9	1	
	14	N/A	TLC-30T21	Plug ZG1/4″	1	内六角
	15	69137568	GB/T80-M8*10	Thrust Screw M8×10	1	
	16	69135454	A30480-06014	Nylon pad Φ6×3	1	
	17	N/A	M352J05-1	Cylinder cap	1	
	18	N/A	SF-1 95	Bush bearing 95×100×30	1	
	19	N/A	Max352J05-001	Snap ring d118×Φ123×2	1	
	20	N/A	GB3452.1-82	O-ring 118×3.55	1	
	21	N/A	M352J05-200	Piston rod	1	
	22	69032087	GB/T5786-M10*1.25*20-8.8J	Bolt M10×1.25×20	2	
	23	69000053	GB/T93-10	Washer 10	2	
	24	69014855	M35043000001	U-hoop	1	

图66-1/Fig66-1. 前起升油缸(二级全自由)/FRONT LIFT CYLINDER(FULL FREE 2-STAGE MAST)

FD35T-C4WE3 FD35T-C4WV3 FD35T-C4W（6）3

序号 Item No.	物料ID ID.	代号 Part No.	名称 Description	数量 Q'ty	备注 Remark
25	N/A	M453J03-002	Bearing ring D110×30×5	1	
26	N/A	M352J05-100	Cylinder body	1	
27	N/A	CKM09-SH20-8	Safety valve	1	
28	N/A	CKM09-SH20-9	Spring	1	
29	69000137	GB/T5786-M12*1.25*25-8.8J	Bolt M12×1.25×25	2	
30	69000054	GB/T93-12	Washer 12	2	

图66-1/Fig66-1.	前起升油缸(二级全自由)/FRONT LIFT CYLINDER(FULL FREE 2-STAGE MAST)

FD35T-C4WE3　　FD35T-C4WV3　　FD35T-C4W（6）3

3.5t前起升缸选用件(二级全自由门架)
OPTIONAL PARTS 3.5 TON FORNT LIFT CYLINDER (FULL FREE 2-STAGE MAST)

起升高度 LIFTING HEIGHT	物料ID ID.	3.5前起升油缸 Lift cylinder	物料ID ID.	备注 REMARKS
3000	69083920	MJ30382-03000-3.0M	69117238	
3300	69083921	MJ30382-03000-3.3M	69117236	
3500	69083922	MJ30382-03000-3.5M	69117235	
3700	69083923	MJ30382-03000-3.7M	69117233	
4000	69083924	MJ30382-03000-4.0M	69117230	
4500	69083925	MJ30382-03000-4.5M	69117232	

图66-2/FIG66-2. 前起升油缸(二级全自由)/FRONT LIFT CYLINDER(FULL FREE 2-STAGE MAST)

FD35T-C4WE3 FD35T-C4WV3 FD35T-C4W（6）3

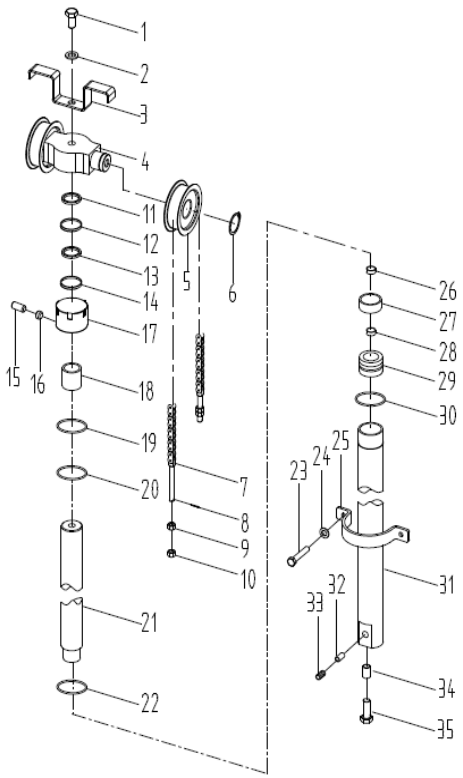

序号	物料ID	代号	名称	数量	备注
Item No.	ID.	Part No.	Description	Q'ty	Remark
A	N/A	MJ35382-03000	Front lift cylinder	1	
1	69005740	GB/T5785-M16*1.5*75-8.8级	Bolt M16×1.5×75	1	
2	69000056	GB/T93-16	Washer 16	1	
3	69106434	M35043000003-Black	Chain protector	1	
4	69106432	MJ35382-00001-Black	Cylinder head	1	
5	69007748	M3538006000	Chain roller A60309	2	
6	69000070	GB/T894.1-Φ40	Axis circlip 40	2	
7	N/A	35B82-01000	Chain ass'y LH1634	2	
8	69017915	GB/T91-3.2*40	Cotter pin 3.2×40	4	
9	69012580	M3538001001	Nut M22×1.5	4	
10	69136816	GB/T6171-2000-M22*1.5	Nut M22×1.5	4	
11	69135739	MJ35382-03009	Dust-proof seal 75×89×8/11	1	
12	69135708	MJ30384-03007	Snap ring d85×Φ75×3	1	
13	69135737	MJ35382-03007	Axis seal 75×85×6	1	
14	69136817	GB1235-76-100*3.1	O-ring 100×3.1	1	
15	69094106	GB/T80-M6*5	Stop bolt M6×5	1	
16	69094104	JB982-77	Compound gasket 6	1	
17	N/A	MJ352J05B-300	Guiding sleeve	1	
18	69131594	SF-1 75	Bushing bearing 75×80×45	1	
19	69135736	MJ35382-03006	Snap ring d95×Φ80×3	1	
20	69016275	GB/T1235-95*3.1	O-ring 95×3.1	1	
21	N/A	MJ352J05B-200	Piston Rod	1	
22	69135735	MJ35382-03005	Orifice bearing ring D95×20×2.5	2	
23	69032087	GB/T5786-M10*1.25*20-8.8J	Bolt M10×1.25×20	2	
24	69000053	GB/T93-10	Washer 10	2	

图66-2/FIG66-2. 前起升油缸(二级全自由)/FRONT LIFT CYLINDER(FULL FREE 2-STAGE MAST)

FD35T-C4WE3 FD35T-C4WV3 FD35T-C4W（6）3

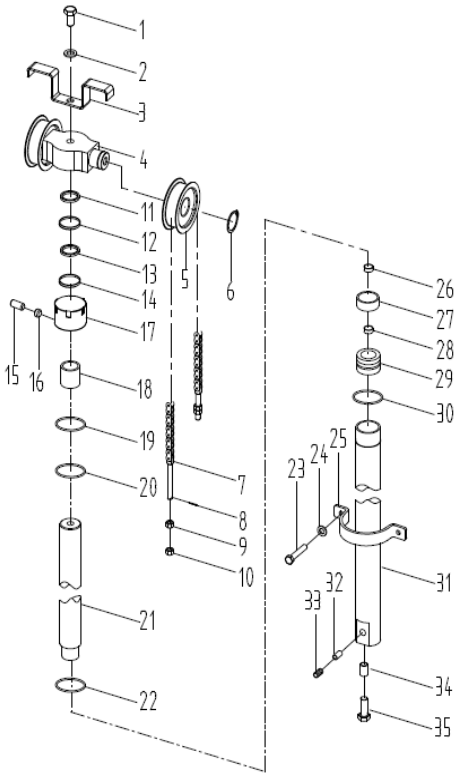

序号 Item No.	物料ID ID.	代号 Part No.	名称 Description	数量 Q'ty	备注 Remark
25	69106433	MJ35382-00002-Black	U-Hoop	1	
26	69136158	MAX302J01-300	Steel wire snap ring d40	1	
27	69135384	A20480-05200	One-way valve	1	
28	69084487	GB/T893.1-Φ22	Orifice snap spring 22	1	
29	N/A	MJ352J05B-400	Plunger		
30	69135738	MJ35382-03008	Orifice seal 95×80×9	2	
31	N/A	MJ352J05B-100	Cylinder body	1	
32	69136181	GB/T 3452.1-92	O-ring 19×2.65	1	
33	N/A	CKM09-SH20-8	Sliding valve	1	
34	69000054	GB/T93-12	Washer 12	2	
35	69000137	GB/T5786-M12*1.25*25-8.8J	Bolt M12×1.25×25	2	

图66-2/FIG66-2. 前起升油缸(二级全自由)/FRONT LIFT CYLINDER(FULL FREE 2-STAGE MAST)

FD35T-C4WE3 FD35T-C4WV3 FD35T-C4W（6）3

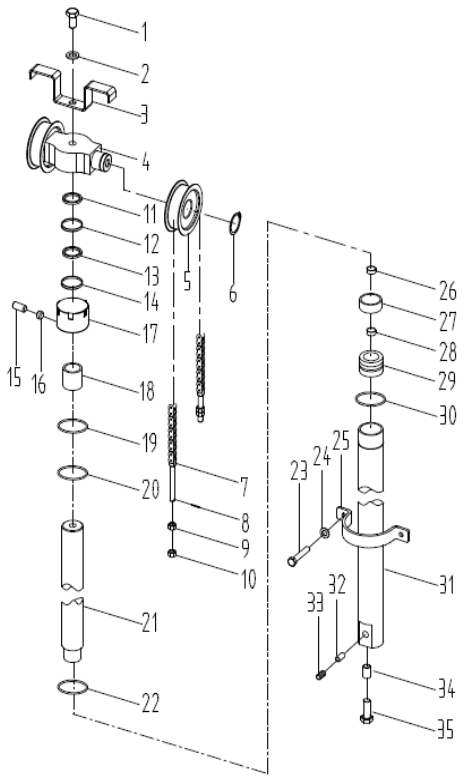

3.5t前起升缸选用件(二级全自由)
OPTIONAL PARTS 3.5 TON FRONT LIFT CYLINDER (FULL FREE 2-STAGE MAST)

起升高度LIFTING HEIGHT	物料ID ID.	3.5t前起升油缸 Lift cylinder			备注 REMARKS
3000	69083950	MJ35382-03000-3.0M			
3300	69083951	MJ35382-03000-3.3M			
3500	69083952	MJ35382-03000-3.5M			
3700	69083953	MJ35382-03000-3.7M			
4000	69083954	MJ35382-03000-4.0M			
4500	69083955	MJ35382-03000-4.5M			

图67/Fig67. 后起升油缸(二级全自由)/REAR LIFT CYLINDER(FULL FREE 2-STAGE MAST)

FD35T-C4WE3 FD35T-C4WV3 FD35T-C4W（6）3

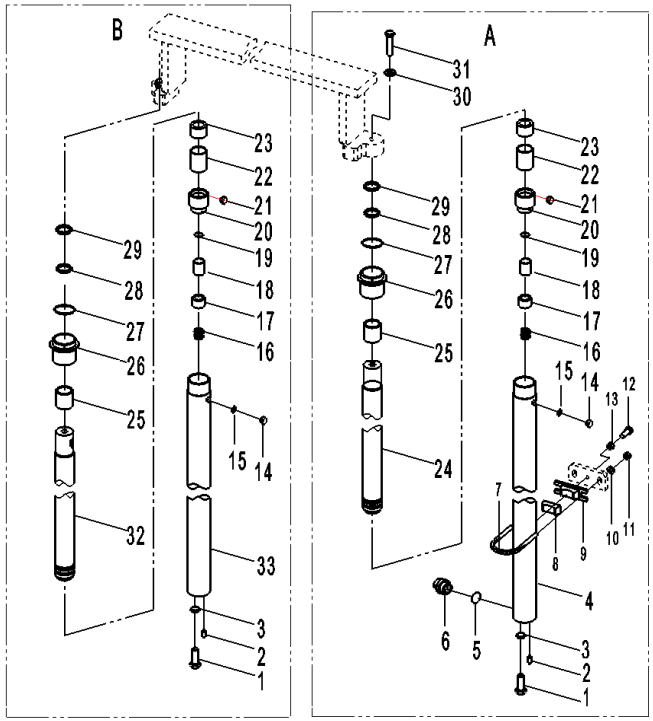

序号	物料ID	代号	名称	数量	备注
Item No.	ID.	Part No.	Description	Q'ty	Remark
A	N/A	35B82-03000	Lift cylinder(right)	1	
B	N/A	35B82-06000	Lift cylinder(left)	1	
01	69000137	GB/T5786-M12*1.25*25-8.8J	Bolt M12×1.25×25	2	
02		GB/T119-10*25	Pin 10×25	2	
03	69000054	GB/T93-12	Washer 12	2	
04	N/A	Max352J04-100	Cylinder body	2	
05	69124131	GB1235-22*2.4-G	O-ring 22×2.4	1	
06	69135455	A30480-06100	Safety valve	1	
07	N/A	A30480-00002	Hoop	2	
08	69012173	M3038000008	Rubber pad	2	
09	69034152	A30480-00003	Hoop seat	2	
10	69000250	GB/T97.1-10	Washer 10	4	
11	69000313	GB/T6171-M10*1.25-8J	Nut M10×1.25	4	
12	69000140	GB/T5786-M12*1.25*45-8.8J	Bolt M12×1.25×45	2	
13	69000314	GB/T6171-M12*1.25-8J	Nut M12×1.25	2	
14	69135575	M30043005010	Deflate plug M8	2	
15	69094104	JB982-77	Seal ring 8	2	
16	69135615	M35043005013	Spring	2	
17	69135610	M35043005008	Sleeve	2	
18	69135609	M35043005007	Plug	2	
19	69136819	GB895.2-86-20	Snap ring 20	2	
20	69135608	M35043005006	Piston	2	
21	N/A	GB/T80-85	Screw M5×6	2	
22	69135611	M35043005009	Bearing ring D56×20×2.5	2	
23	69135607	M35043005005	Sleeve Φ45×100	2	

图67/Fig67. 后起升油缸(二级全自由)/REAR LIFT CYLINDER(FULL FREE 2-STAGE MAST)

FD35T-C4WE3 FD35T-C4WV3 FD35T-C4W（6）3

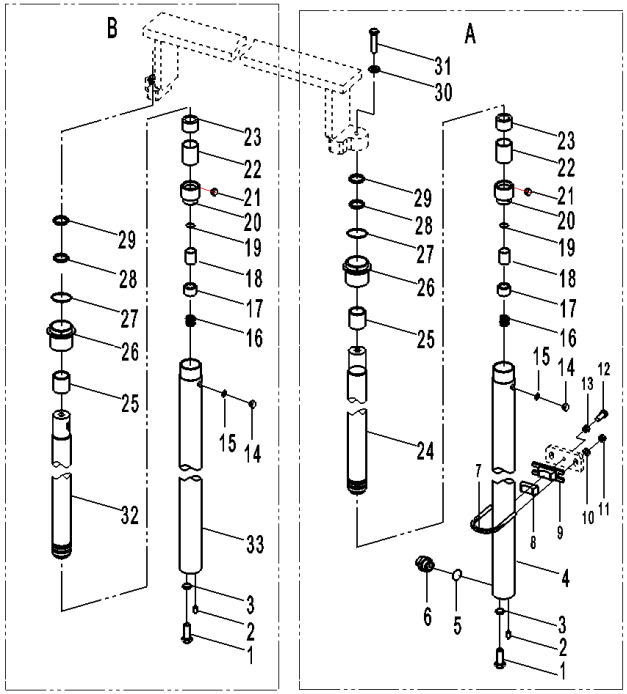

序号	物料ID	代号	名称	数量	备注
Item No.	ID.	Part No.	Description	Q'ty	Remark
24	N/A	Max352J04-1	Piston rod(right)	1	
25	N/A	SF-1 45	Bush bearing 45×50×30	2	
26	N/A	TLC-30T01A	Guiding bushing	2	
27	N/A	GB/T3452.1-92	O-ring 56×2.65	2	
28	N/A	ISI 45	Packing 45×50×6		
29	69135452	A30480-06012	Dust-proof seal 45×57×7/10	2	
30	69000056	GB/T93-16	Washer 16	2	
31	69020214	GB/T5786-M16*1.5*40-8.8J	Bolt M16*1.5*40	2	
32	N/A	Max352J03-2	Piston rod(left)	1	
33	N/A	Max352J03-100	Cylinder body	2	

图67/Fig67. 后起升油缸(二级全自由)/REAR LIFT CYLINDER(FULL FREE 2-STAGE MAST)

FD35T-C4WE3 FD35T-C4WV3 FD35T-C4W（6）3

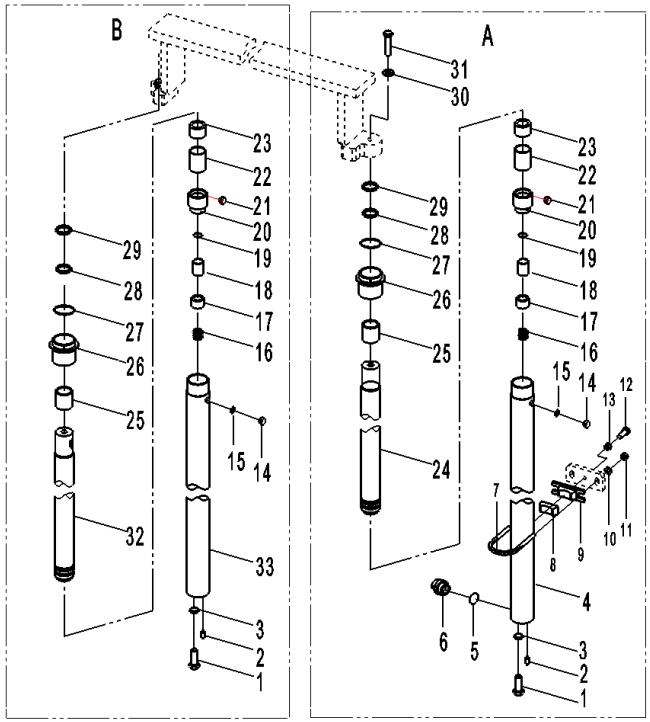

3.5t后起升油缸选用表
REAR LIFT CYLINDER OPTION TABLE

起升高度I FTING HEIGHT	物料ID ID.	3.5t左起升油缸 Lift cylinder L.H.	物料ID ID.	备注 REMARK
3000	69102400	35B82-03000-3.0M	69073215	
3300	69102395	35B82-03000-3.3M	69073216	
3500	69102398	35B82-03000-3.5M	69073217	
3700	69102399	35B82-03000-3.7M	69073218	
4000	69102403	35B82-03000-4.0M	69073219	
4500	69102401	35B82-03000-4.5M	69073220	

图68-1/Fig68-1.			前起升油缸(三级全自由)/FRONT LIFT CYLINDER(FULL FREE 3-STAGE MAST)					
FD18T-C4WE3	FD18T-C4WV3	FD18T-C4W（6）3	序号	物料ID	代号	名称	数量	备注
FD25T-C4WE3	FD25T-C4WV3	FD25T-C4W（6）3	Item No.	ID.	Part No.	Descripition	Q'ty	Remark
FD35T-C4WE3	FD35T-C4WV3	FD35T-C4W（6）3	A	N/A	M15074009000	Middle cylinder	1	1.8t
			-	N/A	M20074009000	Middle cylinder	1	2.5t(2017.10至)
			-	N/A	M30074012000	Middle cylinder	1	3.5t(2017.10至)
			1	69000216	GB/T5785-M16*1.5*80-8.8J	Bolt M16*1.5*80	1	
			2	69000056	GB/T93-16	Washer 16	1	
			3	69106552	M30074000003-Black	Chain hoop	1	
			4	N/A	18B84-00001	Roller seat	1	1.8t
			-	N/A	A30484-00001	Roller seat	1	2.5t
			-	N/A	A35B84-00001	Roller seat	1	3.5t
			5	69003517	M1538013000	Chain roller	2	1.8t
			-	69018464	M30074008000	Chain roller	2	2.5t
			-	69007748	M3538006000	Chain roller	2	3.5t
			6	69000070	GB/T894.1-Φ40	Snap ring 40	2	
			7	N/A	18B84-06000	Chain ass'y	2	1.8t
			-	N/A	20B84-07000	Chain ass'y	2	2.5t
			-	N/A	35B84-07000	Chain ass'y	2	3.5t
			8	69137567	GB/T91-3.2*30	Cotter pin 3.2×30	2	1.8t
			-	69017915	GB/T91-3.2*40	Cotter pin 3.2×40	4	2.5-3.5t
			9	69137588	M1538001001	Spherical nut M14×1.5	4	1.8t
			-	69107732	M3038001001	Spherical Nut M18×1.5	4	2.5t
			-	69012580	M3538001001	Spherical Nut M22×1.5	4	3.5t
			10	69000316	GB/T6171-M14*1.5-8J	Nut M14×1.5	4	1.8t
			-	69000004	GB/T6171-M18*1.5-8J	Nut M18×1.5	4	2.5t
			-	69136816	GB/T6171-2000-M22*1.5	Nut M22×1.5	4	3.5t
			11	69137590	M15043008001	Dust-proof seal 70×80×6/8	1	1.8t

图68-1/Fig68-1.			前起升油缸(三级全自由)/FRONT LIFT CYLINDER(FULL FREE 3-STAGE MAST)					
FD18T-C4WE3	FD18T-C4WV3	FD18T-C4W（6）3	序号	物料ID	代号	名称	数量	备注
FD25T-C4WE3	FD25T-C4WV3	FD25T-C4W（6）3	Item No.	ID.	Part No.	Descripition	Q'ty	Remark
FD35T-C4WE3	FD35T-C4WV3	FD35T-C4W（6）3	-	N/A	LBH 75	Dust-proof seal 75×85×6/8	1	2.5t
			-		LS8945	Dust-proof seal 85×95×6/8	1	3.5t
			12	N/A	Max302J05B-001	Snap spring d70×φ80×3	1	1.8t
			-	N/A	Max352J05B-001	Snap ring d75×φ85×3	1	2.5t
			-	N/A	Max302J05A-001	Snap ring d85×φ100×3	1	3.5t
			13	69135709	MJ30384-03008	Packing 70×80×6	1	1.8t
			-	69135737	MJ35382-03007	Packing 75×85×6	1	2.5t
			-	69020799	LS20799	Packing 85×100×9	1	3.5t
			14	N/A	TLC-30T21	Plug ZG1/4″	1	内六角
			15	69008637	GB/T77-M8*8-12.9J	Screw M8×8	1	内六角
			16	69135454	A30480-06014	Nylon pad φ6×3	1	
			17	69047957	TLC-15T09	Cylinder cap	1	1.8t
			-	69040190	TLC-20T08	Cylinder cap	1	2.5t
			-	N/A	TLC-30T11	Cylinder cap	1	3.5t
			18	69137581	M15043008003	Bush bearing 70×75×30	1	1.8t
			-	N/A	SF-1 75	Bush bearing 75×80×35	1	2.5t
			-	N/A	SF-1 85	Bush bearing 85×90×30	1	3.5t
			19	69137589	M15043008004	Snap spring d89×φ94×2	1	1.8t
			-	N/A	Max202J05A-001	Snap ring d95×φ100×2	1	2.5t
			-	N/A	Max302J05A-002	Snap ring d106×φ111×2	1	3.5t
			20	69022538	GB/T3452.1-90*3.55	O-ring 90×3.55	1	1.8t
			-	69051672	GB/T3452.1-195*3.55	O-ring 95×3.55	1	2.5t
			-	69022847	GB/T3452.1-106*3.55	O-ring 106×3.55	1	3.5t
			21	N/A	Max153J03-200A	Piston rod	1	1.8t
			-	N/A	Max203J03-200	Piston rod	1	2.5t

图68-1/Fig68-1. 前起升油缸(三级全自由)/FRONT LIFT CYLINDER(FULL FREE 3-STAGE MAST)

FD18T-C4WE3 FD18T-C4WV3 FD18T-C4W（6）3
FD25T-C4WE3 FD25T-C4WV3 FD25T-C4W（6）3
FD35T-C4WE3 FD35T-C4WV3 FD35T-C4W（6）3

序号 Item No.	物料ID ID.	代号 Part No.	名称 Descripition	数量 Q'ty	备注 Remark
-	N/A	Max303J03-200	Piston rod	1	3.5t
22	69032087	GB/T5786-M10*1.25*20-8.8J	Bolt M10×1.25×20	2	
23	69000053	GB/T93-10	Washer 10	2	
24	69112801	M15074000001-Black	U-hoop	1	1.8t
-	69012655	M30074000001	U-hoop	1	2.5t
-	69014855	M35043000001	U-hoop	1	3.5t
25	69137585	M15043008005	Bush bearing ring D80×25×3	1	1.8t
-	N/A	Max202J05A-002	Bearing ring D90×30×5	1	2.5t
-	N/A	Max302J05A-003	Bearing ring D100×30×5	1	3.5t
26	N/A	Max153J03-100	Cylinder body	1	1.8t
-	N/A	Max203J03-100	Cylidiner body	1	2.5t
-	N/A	Max303J03-100	Cylidiner body	1	3.5t
27	69136236	TLC-15T12	Safety valve	1	1.8t
-	69072586	TLC-20T14	Safety valve	1	2.5t
-	69072587	TLC-30T27	Safety valve	1	3.5t
28	69072588	TLC-15T13	Spring	1	
29	69000054	GB/T93-12	Washer 12	1	
30	69000137	GB/T5786-M12*1.25*25-8.8J	Bolt M12×1.25×25	1	

图68-1/Fig68-1. 前起升油缸(三级全自由)/FRONT LIFT CYLINDER(FULL FREE 3-STAGE MAST)

FD18T-C4WE3 FD18T-C4WV3 FD18T-C4W（6）3

FD25T-C4WE3 FD25T-C4WV3 FD25T-C4W（6）3

FD35T-C4WE3 FD35T-C4WV3 FD35T-C4W（6）3

1.8-3.5t前起升油缸选用表
FRONT LIFT CYLINDER OPTION TABLE

起升高度Lifting Height	物料ID ID.	1.8t前起升油缸 Lift cylinder	物料ID ID.	2.5t前起升油	备注 Remark
3600	69048420	M15074009000-3.6M	69044593	M2007400	
3700		-		-	
4000	69049734	M15074009000-4.0M	69042251	M2007400	
4350	69012039	M15074009000-4.35M	69010751	M2007400	
4700	69077070	M15074009000-4.7M		-	
5000	69002991	M15074009000-5.0M	69009465	M2007400	
5500	69002974	M15074009000-5.5M	69002982	M2007400	
6000	69007950	M15074009000-6.0M	69002984	M2007400	

图68-1/Fig68-1. 前起升油缸(三级全自由)/FRONT LIFT CYLINDER(FULL FREE 3-STAGE MAST)

FD18T-C4WE3	FD18T-C4WV3	FD18T-C4W（6）3
FD25T-C4WE3	FD25T-C4WV3	FD25T-C4W（6）3
FD35T-C4WE3	FD35T-C4WV3	FD35T-C4W（6）3

1.8-3.5t前起升油缸选用表
FRONT LIFT CYLINDER OPTION TABLE

起升高度Lifting Height	物料ID ID.	3.5t前起升油缸 Lift cylinder			备注 Remark
3600	69091902	MJ30384-03000-3.7M			
3700	69083118	MJ30384-03000-4.0M			
4000	69083120	MJ30384-03000-4.35M			
4350	69083121	MJ30384-03000-4.5M			
4700	69083122	MJ30384-03000-4.8M			
5000	69083123	MJ30384-03000-5.0M			
5500	69083125	MJ30384-03000-5.5M			
6000	69083126	MJ30384-03000-6.0M			

图68-1/Fig68-1. 前起升油缸(三级全自由)/FRONT LIFT CYLINDER(FULL FREE 3-STAGE MAST)

FD18T-C4WE3 FD18T-C4WV3 FD18T-C4W（6）3

FD25T-C4WE3 FD25T-C4WV3 FD25T-C4W（6）3

FD35T-C4WE3 FD35T-C4WV3 FD35T-C4W（6）3

1.8-3.5t前起升油缸选用表
FRONT LIFT CYLINDER OPTION TABLE

起升高度Lifting Height	物料ID ID.	1.8t链条总成 Chain Ass'y	物料ID ID.	备注 Remark
3600	69117530	18B84-06000-3.6		
3700		-	69117703	
4000	69117531	18B84-06000-4.0	69117705	
4350	69117532	18B84-06000-4.35	69117708	
4700	69117535	18B84-06000-4.7	69117709	
5000	69117536	18B84-06000-5.0	69117712	
5500	69117537	18B84-06000-5.5	69117714	
6000	69117538	18B84-06000-6.0	69117716	

图68-1/Fig68-1.	前起升油缸(三级全自由)/FRONT LIFT CYLINDER(FULL FREE 3-STAGE MAST)

FD18T-C4WE3 FD18T-C4WV3 FD18T-C4W（6）3
FD25T-C4WE3 FD25T-C4WV3 FD25T-C4W（6）3
FD35T-C4WE3 FD35T-C4WV3 FD35T-C4W（6）3

1.8-3.5t前起升油缸选用表
FRONT LIFT CYLINDER OPTION TABLE

起升高度Lifting Height	物料ID ID.	3.5t链条总成 Chain Ass'y		备注 Remark
3600		-		
3700	69117843	35B84-07000-3.7		
4000	69117844	35B84-07000-4.0		
4350	69117846	35B84-07000-4.35		
4700	69117848	35B84-07000-4.7		
5000	69117850	35B84-07000-5.0		
5500	69117851	35B84-07000-5.5		
6000	69117853	35B84-07000-6.0		

图68-2/Fig68-2. 前起升油缸(三级全自由)/FRONT LIFT CYLINDER(FULL FREE 3-STAGE MAST)

FD25T-C4W（6）3 FD25T-C4WE3 FD25T-C4WV3

FD35T-C4W（6）3 FD35T-C4WE3 FD35T-C4WV3

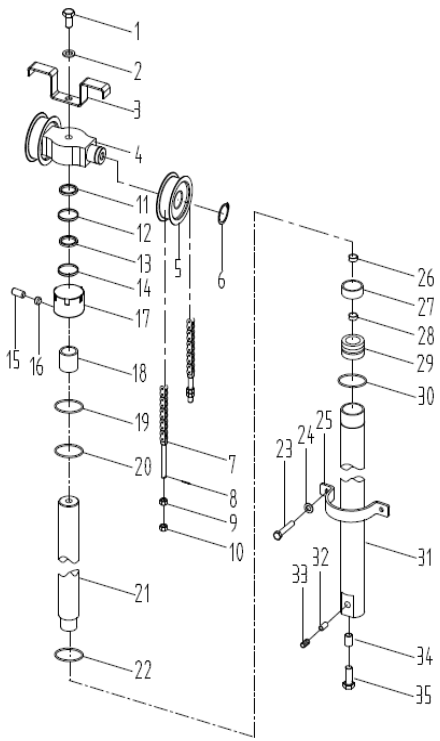

序号	物料ID	代号	名称	数量	备注
Item No.	ID.	Part No.	Description	Q'ty	Remark
A	N/A	MJ20384-03000	Front lift cylinder	1	2.5t(2017.10起)
-	N/A	MJ30384-03000	Front lift cylinder	1	3.5t(2017.10起)
1	69005740	GB/T5785-M16*1.5*75-8.8级	Bolt M16×1.5×75	1	
2	69000056	GB/T93-16	Washer 16	1	
3	69106552	M30074000003-Black	Chain protector	1	
4	69087535	MJ30384-00002	Cylinder head	1	2.5t
-	69086849	35B84-00001	Cylinder head	1	3.5t
5	69018464	M30074008000	Chain roller 780708H	2	2.5t
-	69007748	M3538006000	Chain roller A60309	2	3.5t
6	69000070	GB/T894.1-Φ40	Axis circlip 40	2	
7	N/A	20B84-07000	Chain ass'y LH1234	2	2.5t
-	N/A	35B84-07000	Chain ass'y LH1634	2	3.5t
8	69017915	GB/T91-3.2*40	Cotter pin 3.2×40	4	
9	69107732	M3038001001	Nut M18×1.5	4	2.5t
-	69012580	M3538001001	Nut M22×1.5	4	3.5t
10	69000004	GB/T6171-M18*1.5-8J	Nut M18×1.5	4	2.5t
-	69136816	GB/T6171-2000-M22*1.5	Nut M22×1.5	4	3.5t
11	N/A	LBH 60	Dust-proof seal 60×70×8/11	1	2.5t
-	N/A	LBH 70	Dust-proof seal 70×84×8/11	1	3.5t
12	69136187	MAX202J05B-001	Snap ring d70×Φ60×3	1	2.5t
-	69135707	MJ30384-03006	Snap ring d80×Φ70×3	1	3.5t
13	69135664	MJ20384-03008	Axis seal 60×70×6	1	2.5t
-	69135709	MJ30384-03008	Axis seal 70×80×6	1	3.5t
14	69018828	GB/T1235-75*3.1	O-ring 75×3.1	1	2.5t
-	69023228	LS23228	O-ring 85×3.1	1	3.5t

图68-2/Fig68-2.	前起升油缸(三级全自由)/FRONT LIFT CYLINDER(FULL FREE 3-STAGE MAST)					
FD25T-C4W（6）3 FD25T-C4WE3 FD25T-C4WV3	序号	物料ID	代号	名称	数量	备注
FD35T-C4W（6）3 FD35T-C4WE3 FD35T-C4WV3	Item No.	ID.	Part No.	Description	Q'ty	Remark
	15	69136180	GB/T 77-1985	Screw M6×5	1	内六角
	16	69094104	JB982-77	Pad 6	1	
	17	69040190	TLC-20T08	Guiding sleeve	1	2.5t
	-	N/A	TLC-30T11	Guiding sleeve	1	3.5t
	18	69135667	MJ20384-03011	Bushing bearing 60×65×45	1	2.5t
	-	69135712	MJ30384-03011	Bushing bearing 70×75×45	1	3.5t
	19	69135663	MJ20384-03007	Snap ring d75×Φ65×3	1	2.5t
	-	69135708	MJ30384-03007	Snap ring d85×Φ75×3	1	3.5t
	20	69018828	GB/T1235-75*3.1	O-ring 75×3.1	1	2.5t
	-	69023228	LS23228	O-ring 85×3.1	1	3.5t
	21	N/A	MJ203J03B-200	Piston Rod	1	2.5t
	-	N/A	MJ303J03B-200	Piston Rod	1	3.5t
	22	69136183	MAX202J05B-003	Orifice bearing ring D70×20×2.5	1	2.5t
	-	69135706	MJ30384-03005	Orifice bearing ring D85×20×2.5	1	3.5t
	23	69032087	GB/T5786-M10*1.25*20-8.8J	Bolt M10×1.25×20	2	
	24	69000053	GB/T93-10	Washer 10	2	
	25	69112410	MJ20384-00001-Black	U-Hoop	1	2.5t
	-	69106554	MJ30384-00001-Black	U-Hoop	1	3.5t
	26	69136158	MAX302J01-300	Steel wire snap ring d40	1	
	27	69135384	A20480-05200	One-way valve	1	
	28	69084487	GB/T893.1-Φ22	Orifice snap spring 22	1	
	29	69136159	MJ203J03B-4003	Piston	1	2.5t
	-	N/A	MJ303J03B-400	Piston	1	3.5t
	30	69135665	MJ20384-03009	Orifice seal 75×65×6	2	2.5t
	-	69135710	MJ30384-03009	Orifice seal 85×75×6	2	3.5t

图68-2/Fig68-2.	前起升油缸(三级全自由)/FRONT LIFT CYLINDER(FULL FREE 3-STAGE MAST)					
FD25T-C4W（6）3 FD25T-C4WE3 FD25T-C4WV3	序号	物料ID	代号	名称	数量	备注
FD35T-C4W（6）3 FD35T-C4WE3 FD35T-C4WV3	Item No.	ID.	Part No.	Description	Q'ty	Remark
	31	N/A	MJ203J03B-100	Cylinder body	1	2.5t
	-	N/A	MJ303J03B-100	Cylinder body	1	3.5t
	32	69124144	GB/T3452.1-19*2.65-G	O-ring 19×2.65	1	
	33	69072586	TLC-20T14	Sliding valve	1	2.5t
	-	69072587	TLC-30T27	Sliding valve	1	3.5t
	34	69000054	GB/T93-12	Washer 12	1	
	35	69000137	GB/T5786-M12*1.25*25-8.8J	Bolt M12×1.25×25	1	

图68-2/Fig68-2.	前起升油缸(三级全自由)/FRONT LIFT CYLINDER(FULL FREE 3-STAGE MAST)

FD25T-C4W（6）3　FD25T-C4WE3　FD25T-C4WV3

FD35T-C4W（6）3　FD35T-C4WE3　FD35T-C4WV3

2.5-3.5t前起升油缸选用表(三级全自由)
FRONT LIFT CYLINDER OPTION TABLE(FULL FREE 3-STAGE MAST)

起升高度LIFTING HEIGHT	物料ID ID.	2.5t前起升油缸 Lift cylinder	物料ID ID.	3.5t前起升油	备注 REMARK
3600	69084042	MJ20384-03000-3.6M	69083119	MJ30384-	
4000	69084044	MJ20384-03000-4.0M	69083118	MJ30384-	
4350	69084045	MJ20384-03000-4.35M	69083120	MJ30384-	
4500	69084046	MJ20384-03000-4.5M	69083121	MJ30384-	
4800	69084047	MJ20384-03000-4.8M	69083122	MJ30384-	
5000	69084048	MJ20384-03000-5.0M	69083123	MJ30384-	
5500	69084050	MJ20384-03000-5.5M	69083125	MJ30384-	
6000	69084051	MJ20384-03000-6.0M	69083126	MJ30384-	

图69/FIG69. 后起升油缸(三级全自由)/REAR LIFT CYLINDER(FULL FREE 3-STAGE MAST)

FD18T-C4WE3 FD18T-C4WV3 FD18T-C4W（6）3

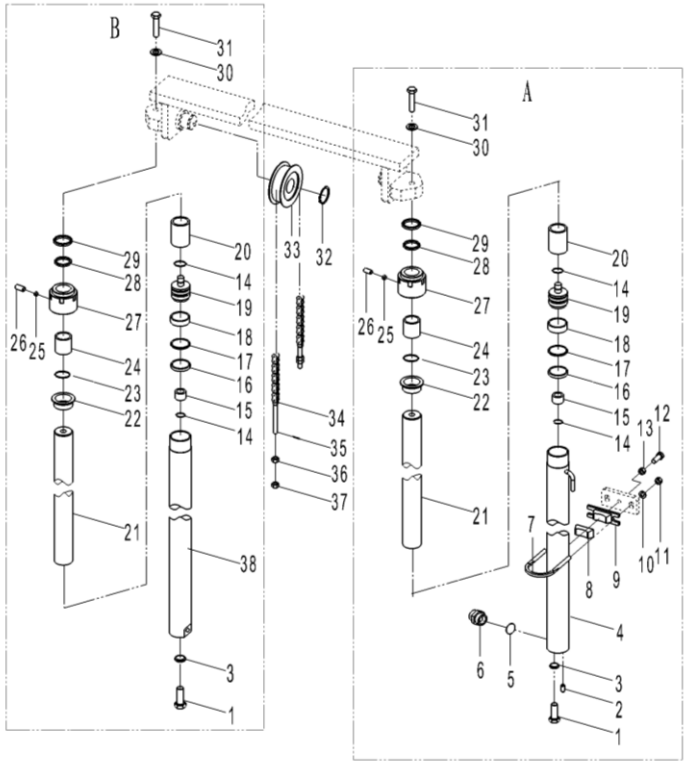

序号 Item No.	物料ID ID.	代号 Part No.	名称 Description	数量 Q'ty	备注 Remark
A	N/A	M15074006000B	Lift cylinder(right)	1	
B	N/A	M15074007000B	Lift cylinder(left)	1	
1	69000137	GB/T5786-M12*1.25*25-8.8J	Bolt M12×1.25×25	2	
2	N/A	GB/T119-86	Pin 10×24	1	
3	69000054	GB/T93-12	Washer 12	2	
4	N/A	Max153J02-100	Cylinder body (right)	1	
5	69124131	GB1235-22*2.4-G	O-ring 22×2.4	1	
6	69135383	A20480-05100	Safety valve	1	
7	69011293	M1538000005	Hoop	2	
8	69012173	M3038000008	Rubber pad	2	
9	69012172	M1538000007	Hoop seat	2	
10	69000250	GB/T97.1-10	Washer 10	4	
11	69000313	GB/T6171-M10*1.25-8J	Nut M10×1.25	4	
12	69000213	GB/T5786-M12*1.25*30-8.8J	Bolt M12×1.25×30	2	
13	69000314	GB/T6171-M12*1.25-8J	Nut M12×1.25	2	
14	69137593	GB/T895.1-24	Snap spring d=24	4	
15	N/A	TLC-15T03A	Sleeve	2	
16	69137583	M1538009002	Packing 45×35×6	2	
17	N/A	Max030-06-001	Snap spring Φ45×Φ35×3	2	
18	N/A	Max152J01B-001	Bush bearing ring D45×8×2.5	2	
19	69137580	M1538009004	Piston	2	
20	69137584	M15074006001	Sleeve	2	
21	N/A	Max153J01-1	Piston rod	2	
22	69045601	TLC-15T06	Bushing	2	
23	69023163	GB/T1235-55*3.1	O-ring 55×3.1	2	

图69/FIG69. 后起升油缸(三级全自由)/REAR LIFT CYLINDER(FULL FREE 3-STAGE MAST)

FD18T-C4WE3 FD18T-C4WV3 FD18T-C4W（6）3

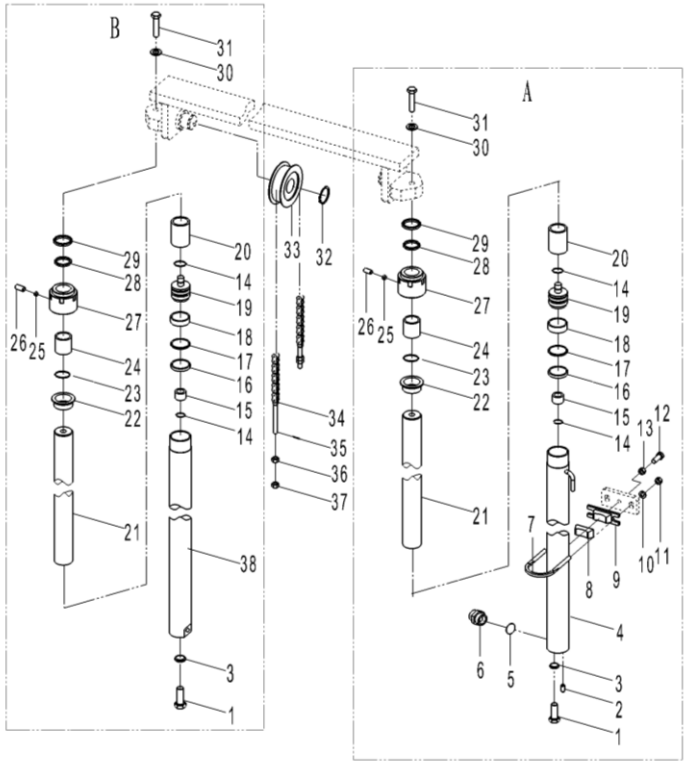

序号 Item No.	物料ID ID.	代号 Part No.	名称 Description	数量 Q'ty	备注 Remark
24	69131593	SF-1 35	Bush bearing φ35×φ39×30	2	
25	69135454	A30480-06014	Nylon pad φ6×3	2	
26	69008637	GB/T77-M8*8-12.9J	Screw M8×8	2	
27	N/A	TLC-15T05A	Cylinder cap	2	
28	N/A	CF 35	Packing 35×45×7	2	
29	69135550	M20043005006	Dust-proof seal 35×47×7/10	2	
30	69000056	GB/T93-16	Washer 16	2	
31	69000184	GB/T5786-M16*1.5*35	Bolt M16×1.5×35	2	
32	69000070	GB/T894.1-Φ40	Snap spring40	2	
33	69003517	M1538013000	Chain roller	2	
34	N/A	18B84-05000	Chain	2	
35	69137567	GB/T91-3.2*30	Cotter pin 3.2×30	4	
36	69137588	M1538001001	Spherical nut M14×1.5	4	
37	69000316	GB/T6171-M14*1.5-8J	Nut M14×1.5	4	
38	N/A	Max153J01-1000	Cylinder body (left)	1	

图69/FIG69. 后起升油缸(三级全自由)/REAR LIFT CYLINDER(FULL FREE 3-STAGE MAST)

FD18T-C4WE3 FD18T-C4WV3 FD18T-C4W（6）3

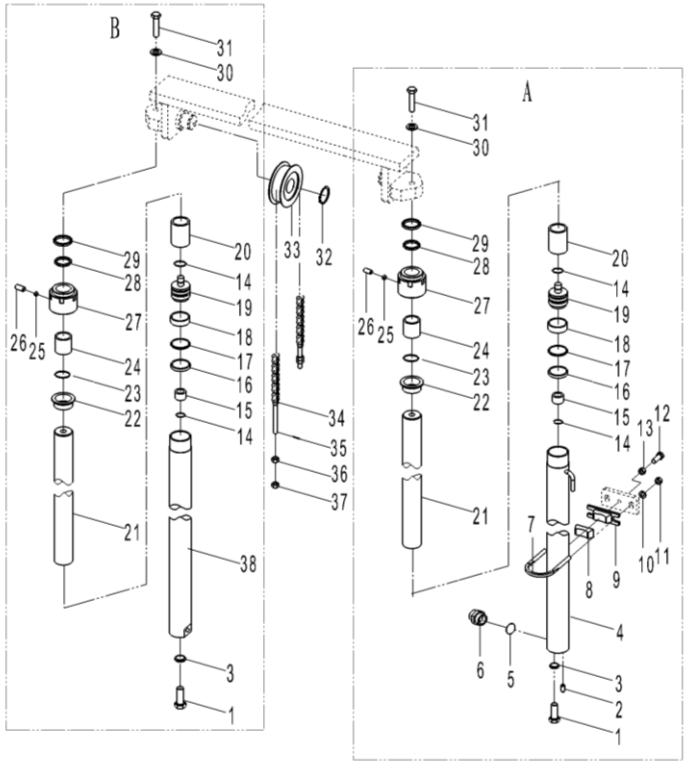

起升油缸选用表
REAR LIFT CYLINDER OPTION TABLE

起升高度LIFTING HEIGHT	物料ID ID.	起升油缸左 Lift cylinder L.H.	物料ID ID.	起升油缸右	备注 REMARK
3600	69048418	M15074007000-3.6M	69104787	00600	
4000	69048416	M15074007000-4.0M	69103504	00600	
4350	69012038	M15074007000-4.35M	69102891	00600	
4500	69006381	M15074007000-4.5M	69102427	00600	
4800	69004872	M15074007000-4.8M	69102423	00600	
5000	69007649	M15074007000-5.0M	69102436	00600	
5500	69002878	M15074007000-5.5M	69102419	00600	
6000	69007651	M15074007000-6.0M	69102437	00600	
6500	69026278	M15074007000-6.5M	69102977	00600	

图69/FIG69. 后起升油缸(三级全自由)/REAR LIFT CYLINDER(FULL FREE 3-STAGE MAST)

FD18T-C4WE3 FD18T-C4WV3 FD18T-C4W（6）3

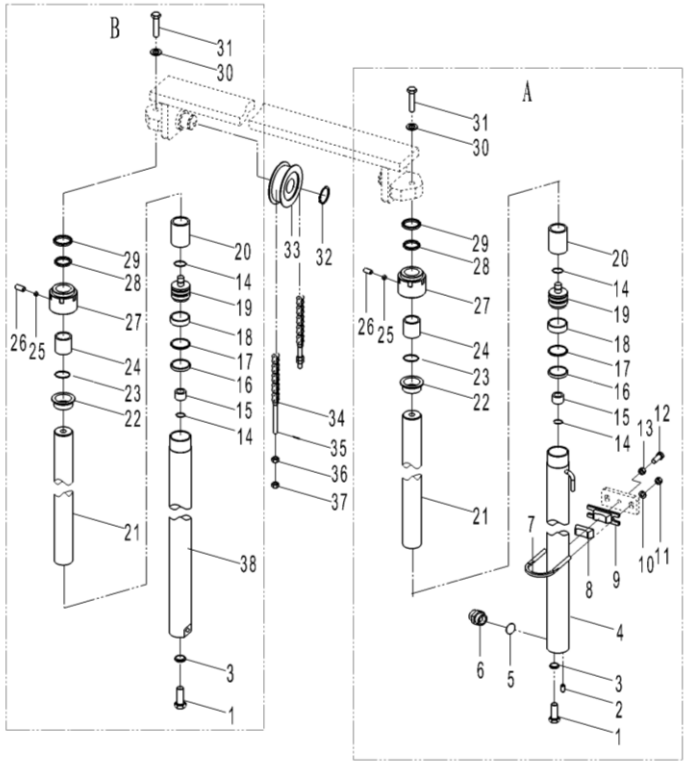

起升油缸选用表
REAR LIFT CYLINDER OPTION TABLE

起升高度LIFTING HEIGHT	物料ID ID.	（长）链条总成 Chain Ass'y			备注 REMARK
3600	69117520	18B84-05000-3.6			
4000	69117521	18B84-05000-4.0			
4350	69117522	18B84-05000-4.35			
4500	69117523	18B84-05000-4.5			
4800	69117524	18B84-05000-4.8			
5000	69117525	18B84-05000-5.0			
5500	69117545	18B84-05000-5.5			
6000	69117526	18B84-05000-6.0			
6500	69117527	18B84-05000-6.5			

图70/Fig70. 后起升油缸(三级全自由)/REAR LIFT CYLINDER(FULL FREE 3-STAGE MAST)

FD25T-C4WE3 FD25T-C4WV3 FD25T-C4W（6）3

FD35T-C4WE3 FD35T-C4WV3 FD35T-C4W（6）3

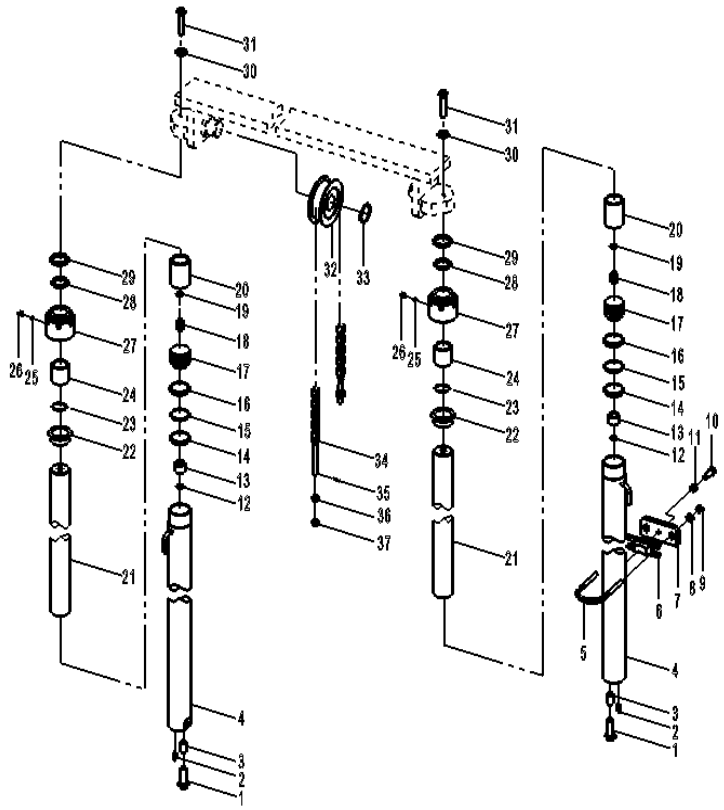

序号	物料ID	代号	名称	数量	备注
Item No.	ID.	Part No.	Descripition	Q'ty	Remark
A	N/A	20B84-09000A	Lift cylinder(right)	1	2.5t
-	N/A	35B84-08000A	Lift cylinder(right)	1	3.5t
B	N/A	20B84-03000A	Lift cylinder(left)	1	2.5t
-	N/A	35B84-03000	Lift cylinder(left)	1	3.5t
1	69000137	GB/T5786-M12*1.25*25-8.8J	Bolt M12×1.25×25	2	
2	69056203	GB/T119.2-2000/B10*24	Pin 10×24	2	
3	69004901	M3038000013 φ16*18	Collar	2	
4	N/A	Max203J02A-100	Cylidiner body	2	2.5t
-	N/A	Max303J02A-100	Cylidiner body	2	3.5t
5	69006791	M3038000007	Hoop	2	
6	69012173	M3038000008	Rubber pad	2	
7	69034152	A30480-00003	Hoop seat	2	
8	69000250	GB/T97.1-10	Washer 10	4	
9	69000291	GB/T889.2-M10*1.25-8J	Nut M10×1.25	4	
10	69076420	GB/T5786-M12*1.25*60-8.8J	Bolt M12×1.25×60	2	
11	69136816	GB/T6171-2000-M22*1.5	Nut M12×1.25	2	
12	69130898	GB/T895.1-30	Snap ring d30	4	
13	69135447	A30480-06007	Sleeve	2	
14	69135377	A20480-05008	Packing 50×40×6	2	2.5t
-	69135450	A30480-06010	Packing 56×45×7	2	3.5t
15	N/A	Max202J01A-001	Snap ring Φ50×Φ40×3	2	2.5t
-	69135449	A30480-06009	Snap ring Φ56×Φ45×3	2	3.5t
16	69136174	MAX202J01A-002	Bearing ring D50×8×2.5	2	2.5t
-	69020038	LS20038	Bearing ring D56×8×2.5	2	3.5t
17	69135374	A20480-05005	Piston	2	2.5t

图70/Fig70. 后起升油缸(三级全自由)/REAR LIFT CYLINDER(FULL FREE 3-STAGE MAST)

FD25T-C4WE3 FD25T-C4WV3 FD25T-C4W（6）3

FD35T-C4WE3 FD35T-C4WV3 FD35T-C4W（6）3

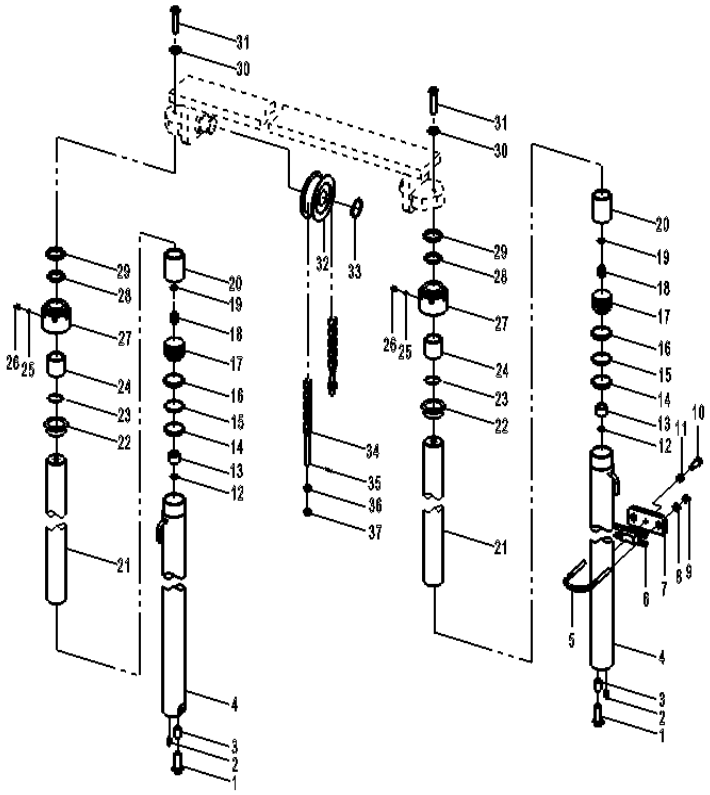

序号	物料ID	代号	名称	数量	备注
Item No.	ID.	Part No.	Descripition	Q'ty	Remark
-	69135445	A30480-06005	Piston	2	3.5t
18	69135384	A20480-05200	One-way valve	1	
19	69130898	GB/T895.1-30	Snap ring d30	4	
20	69136216	MAX203J01-2	Sleeve	2	2.5t
-	69136825	Max303J01-2	Sleeve	2	3.5t
21	N/A	MB203J01-1	Piston rod	2	2.5t
-	N/A	MB303J01-1	Piston rod	2	3.5t
22	69135373	A20480-05004	Bushing	2	2.5t
-	69135444	A30480-06004	Bushing	2	3.5t
23	69023164	GB/T1235-60*3.1	O-ring 60×3.1	2	2.5t
-	69009541	LS9541	O-ring 68×3.1	2	3.5t
24	69135380	A20480-05011	Bush bearing 40×44×30	2	2.5t
-	N/A	SF-1 45	Bush bearing 45×50×30	2	3.5t
25	69094104	JB982-77	Compination Washer 6	2	
26	N/A	GB/T70-85	Screw M6×5	2	
27	69135372	A20480-05003	Cylinder cap	2	2.5t
-	69135443	A30480-06003	Cylinder cap	2	3.5t
28	69135378	A20480-05009	Packing 40×50×7	2	2.5t
-	69135451	A30480-06011	Packing 45×55×7	2	3.5t
29	69135379	A20480-05010	Dust-proof seal 40×52×7/10	2	2.5t
-	69135452	A30480-06012	Dust-proof seal 45×57×7/10	2	3.5t
30	69000056	GB/T93-16	Washer 16	2	
31	69000166	GB/T5786-M16*1.5*50-8.8J	Bolt M16×1.5×50	2	
32	69042242	20B84-08000	Chain roller	2	2.5t
-	69007748	M3538006000	Chain roller	2	3.5t

图70/Fig70. 后起升油缸(三级全自由)/REAR LIFT CYLINDER(FULL FREE 3-STAGE MAST)

FD25T-C4WE3 FD25T-C4WV3 FD25T-C4W（6）3

FD35T-C4WE3 FD35T-C4WV3 FD35T-C4W（6）3

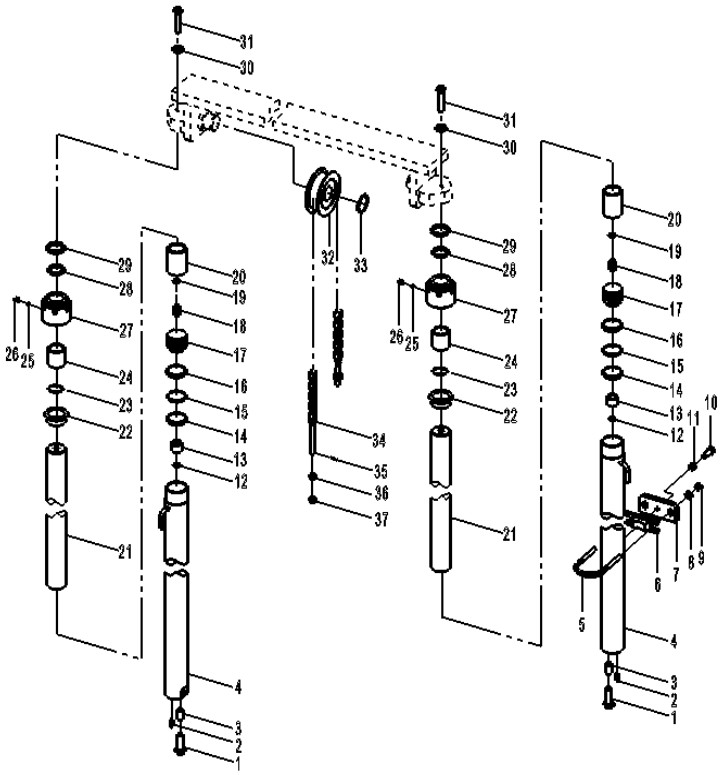

序号	物料ID	代号	名称	数量	备注
Item No.	ID.	Part No.	Descripition	Q'ty	Remark
33	69000070	GB/T894.1-Φ40	Snap ring40	2	2.5t
-	69000071	GB/T894.1-Φ45	Snap ring45	2	3.5t
34	N/A	20B84-01000	Chain ass'y	2	2.5t
-	N/A	35B84-01000	Chain ass'y	2	3.5t
35	69017915	GB/T91-3.2*40	Cotter pin 3.2×40	4	
36	69107732	M3038001001	Nut M18×1.5	4	2.5t
-	69012580	M3538001001	Nut M22×1.5	4	3.5t
37	69000004	GB/T6171-M18*1.5-8J	Nut M18×1.5	4	2.5t
-	69136816	GB/T6171-2000-M22*1.5	Nut M22×1.5	4	3.5t

图70/Fig70. 后起升油缸(三级全自由)/REAR LIFT CYLINDER(FULL FREE 3-STAGE MAST)

FD25T-C4WE3 FD25T-C4WV3 FD25T-C4W（6）3

FD35T-C4WE3 FD35T-C4WV3 FD35T-C4W（6）3

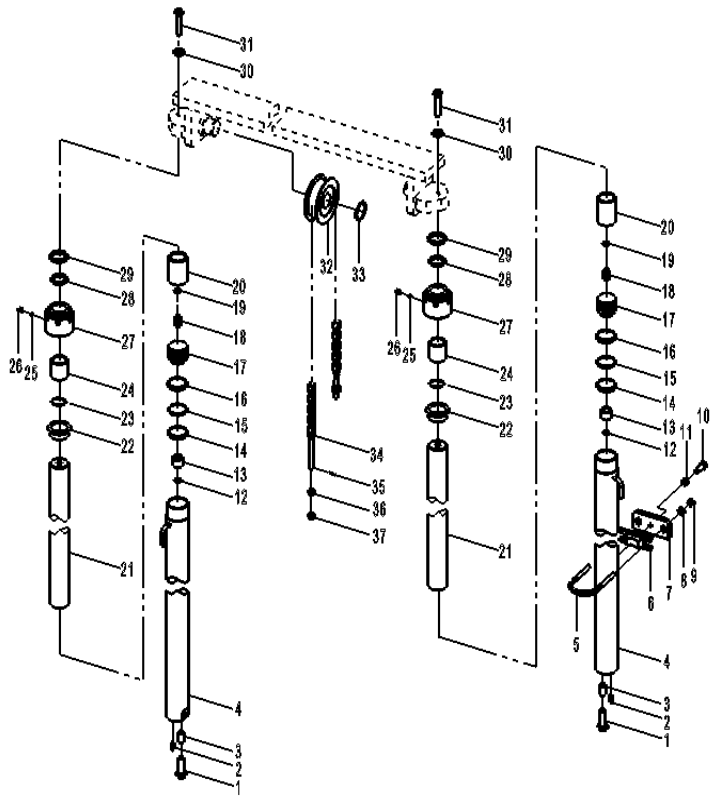

2.5-3.5t起升油缸选用表
REAR LIFT CYLINDER OPTION TABLE

起升高度LIFTING HEIGHT	物料ID ID.	2.5t左起升油缸左 Lift cylinder L.H.	物料ID ID.	2.5t右起升油	备注 REMARK
3700	69042239	20B84-03000-3.7M	69103236	0900	
4000	69042248	20B84-03000-4.0M	69103238	0900	
4350	69042249	20B84-03000-4.35M	69103240	09000	
4700	69042250	20B84-03000-4.7M	69103244	0900	
5000	69054369	20B84-03000-5.0M	69103528	0900	
5500	69054370	20B84-03000-5.5M	69103529	0900	
6000	69054366	20B84-03000-6.0M	69103527	0900	

图70/Fig70. 后起升油缸(三级全自由)/REAR LIFT CYLINDER(FULL FREE 3-STAGE MAST)

FD25T-C4WE3 FD25T-C4WV3 FD25T-C4W（6）3

FD35T-C4WE3 FD35T-C4WV3 FD35T-C4W（6）3

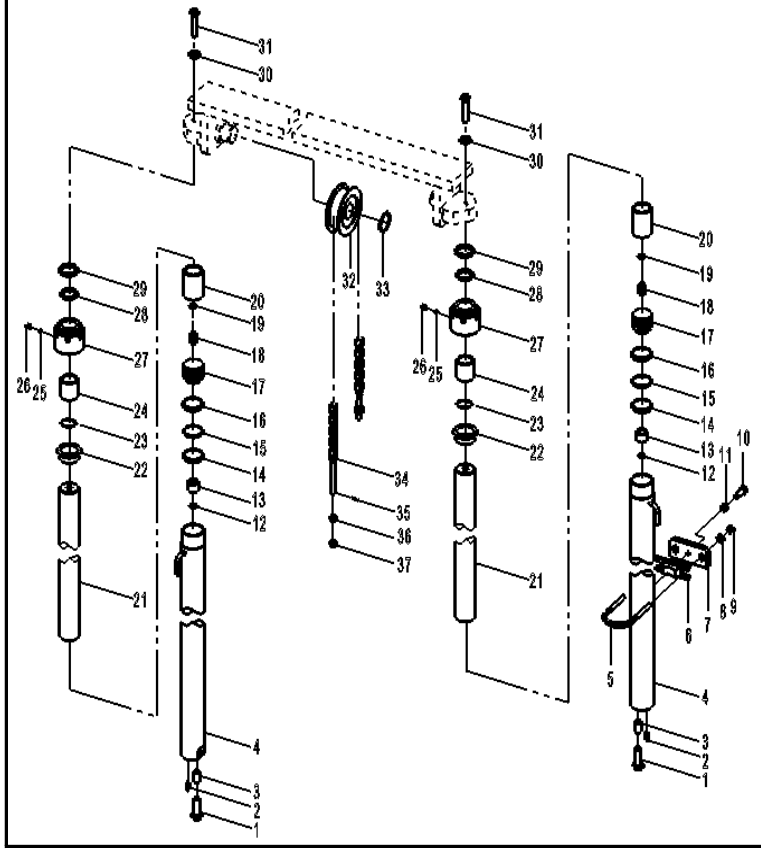

2.5-3.5t起升油缸选用表
REAR LIFT CYLINDER OPTION TABLE

起升高度LIFTING HEIGHT	物料ID ID.	2.5t链条总成 Chain Ass'y			备注 REMARK
3700	69117700	20B84-01000-3.7			
4000	69117698	20B84-01000-4.0			
4350	69117697	20B84-01000-4.35			
4700	69117696	20B84-01000-4.7			
5000	69117695	20B84-01000-5.0			
5500	69117694	20B84-01000-5.5			
6000	69117691	20B84-01000-6.0			

图70/Fig70.	后起升油缸(三级全自由)/REAR LIFT CYLINDER(FULL FREE 3-STAGE MAST)

FD25T-C4WE3 FD25T-C4WV3 FD25T-C4W（6）3

FD35T-C4WE3 FD35T-C4WV3 FD35T-C4W（6）3

2.5-3.5t起升油缸选用表
REAR LIFT CYLINDER OPTION TABLE

起升高度LIFTING HEIGHT	物料ID ID.	3.5t左起升油缸 Lift cylinder L.H.	物料ID ID.	3.5t右起升油	备注 REMARK
3700	69042269	35B84-03000-3.7M	69103269	08000	
4000	69042120	35B84-03000-4.0M	69103233	08000	
4350	69042270	35B84-03000-4.35M	69103270	08000	
4700	69042271	35B84-03000-4.7M	69103271	08000	
5000	69054375	35B84-03000-5.0M	69103542	08000	
5500	69054376	35B84-03000-5.5M	69103543	08000	
6000	69054374	35B84-03000-6.0M	69103530	08000	

图70/Fig70.	后起升油缸(三级全自由)/REAR LIFT CYLINDER(FULL FREE 3-STAGE MAST)

FD25T-C4WE3　FD25T-C4WV3　FD25T-C4W（6）3

FD35T-C4WE3　FD35T-C4WV3　FD35T-C4W（6）3

2.5-3.5t起升油缸选用表
REAR LIFT CYLINDER OPTION TABLE

起升高度LIFTING HEIGHT	物料ID ID.	3.5t链条总成 Chain Ass'y			备注 REMARK
3700	69117842	35B84-01000-3.7			
4000	69117841	35B84-01000-4.0			
4350	69117840	35B84-01000-4.35			
4700	69117839	35B84-01000-4.7			
5000	69117838	35B84-01000-5.0			
5500	69117837	35B84-01000-5.5			
6000	69117836	35B84-01000-6.0			

图71/Fig71.			倾斜油缸/TILT CYLINDER					
FD18T-C4WE3	FD18T-C4WV3	FD18T-C4W（6）3	序号	物料ID	代号	名称	数量	备注
FD25T-C4WE3	FD25T-C4WV3	FD25T-C4W（6）3	Item No.	ID.	Part No.	Descripition	Q'ty	Remark
FD35T-C4WE3	FD35T-C4WV3	FD35T-C4W（6）3	A	N/A	18B80-08000	Tilt cylinder(right)	1	1.8t
			-	N/A	25BY80-05000	Tilt cylinder(right)		2.5t
			-	N/A	20B80-07000	Tilt cylinder(right)	1	3.5t
			B	N/A	18B80-05000	Tilt cylinder(left)	1	1.8t
				N/A	25BY80-06000	Tilt cylinder(left)	1	2.5t
			-	N/A	20B80-08000	Tilt cylinder(left)	1	3.5t
			01	69000315	GB/T6171-M12*1.5-8J	Nut M12×1.5	1	1.8t
			-	69000316	GB/T6171-M14*1.5-8J	Nut M14×1.5	1	2.5-3.5t
			02	69000054	GB/T93-12	Washer 12	1	1.8t
			-	69005111	GB/T93-14	Washer 14	1	2.5-3.5t
			03	69003941	JB/T7940.1-M10*1	Nipple M10×1	1	
			04	N/A	MB018-06-1	Connect ring	1	1.8t
			-	N/A	M030-06-1	Connect ring	1	2.5-3.5t
			05	69135422	A30480-05013	Oscillating bearing GE30ES	1	
			06	69059825	GB/T893.1-Φ47	Clip spring D47	1	
			07	69009383	GB/T5785 M12*1.5*40	Bolt M12×1.5×40	1	1.8t
			-	69136826	GB/T5786-M14*1.5*55	Bolt M14×1.5×55	1	2.5-3.5t
			08	69008949	LS8949	Dust-proof seal d30×38×5/6.5	1	1.8t
				N/A	LBH32	Dust-proof seal d32×40×5/6.5	1	2.5t
			-	69136198	LBH35	Dust-proof seal d35×43×5/6.5	1	3.5t
			09	69139924	A15780-03002	Snap spring Φ30×Φ40×3	1	1.8t
			-	N/A	MB020-001	Snap ring Φ42×Φ32×3	1	2.5t
			-	N/A	Max030-06-001	Snap spring Φ45×Φ35×3	1	3.5t
			10	69139925	A15780-03003	Packing Φ30×Φ40×6	1	1.8t
			-	69136205	ISI 32	Packing 32×42×6	1	2.5t

图71/Fig71.			倾斜油缸/TILT CYLINDER					
FD18T-C4WE3	FD18T-C4WV3	FD18T-C4W（6）3	序号	物料ID	代号	名称	数量	备注
FD25T-C4WE3	FD25T-C4WV3	FD25T-C4W（6）3	Item No.	ID.	Part No.	Descripition	Q'ty	Remark
FD35T-C4WE3	FD35T-C4WV3	FD35T-C4W（6）3	-	69135419	A30480-05010	Packing 35×45×6	1	3.5t
			11	69139926	A15780-03004	Bush bearing 30×34×30	1	1.8t
			-	69135350	A20480-04010	Bush bearing 32×36×35	1	2.5t
			-	69135423	A30480-05014	Bush bearing 35×39×35	1	3.5t
			12	N/A	TLC-15T20A	Guiding bushing63	1	1.8t
			-	69135351	A20480-04011	Guiding bushing70	1	2.5t
			-	69135412	A30480-05003	Guiding bushing80	1	3.5t
			13	69139928	A15780-03006	Snap spring φ63×φ58.5×1.5	1	1.8t
			-	69135346	A20480-04006	Snap ring φ70.5×φ62×1.5	1	2.5t
			-	69135418	A30480-05009	Snap spring φ80.5×φ72×1.5	1	3.5t
			14	69009554	LS9554	O-ring 63×3.1	1	1.8t
			-	69002386	LS2386	O-ring 70×5.7	1	2.5t
			-	69002387	LS2387	O-ring 80×5.7	1	3.5t
			15	N/A	MB018-06-2	Piston rod	1	1.8t
			-	N/A	MB020-06-1	Piston rod	1	2.5t
			-	N/A	MB030-06-1	Piston rod	1	3.5t
			16	69135118	GB1235-76	O-ring 36×3.5	1	1.8t
			-	69002382	LS2382	O-ring 38×3.5	1	2.5t
			-	69002383	LS2383	O-ring 41×3.5	1	3.5t
			17	N/A	MB018-06-3	Sleeve	1	1.8t
			-	N/A	MB020-06-1	Spacer Ⅰ	1	2.5t
			-	N/A	MB030-06-2	Spacer Ⅰ	1	3.5t
			18	69135507	A35480-04011	Packing 63×53×6	2	1.8t
			-	69135348	A20480-04008	Packing 70×60×6	2	2.5t
			-	69135420	A30480-05011	Packing 80×70×6	2	3.5t

图71/Fig71.			倾斜油缸/TILT CYLINDER					
FD18T-C4WE3	FD18T-C4WV3	FD18T-C4W（6）3	序号	物料ID	代号	名称	数量	备注
FD25T-C4WE3	FD25T-C4WV3	FD25T-C4W（6）3	Item No.	ID.	Part No.	Descripition	Q'ty	Remark
FD35T-C4WE3	FD35T-C4WV3	FD35T-C4W（6）3	19	69135506	A35480-04010	Snap ring φ63×φ53×2.5	2	1.8t
			-	69135345	A20480-04005	Snap ring Φ70×Φ60×2.5	1	2.5t
			-	69135417	A30480-05008	Snap ring φ80×φ70×2.5	2	3.5t
			20	N/A	MS15385-003	Bush bearing ring D63×15×2.5	1	1.8t
			-	69135343	A20480-04003	Bush bearing ring D70×16×2.5	1	2.5t
			-	69135415	A30480-05006	Bush bearing ring D80×16×2.5	1	3.5t
			21	N/A	TLC-15T21	Piston	1	1.8t
			-	69135413	A30480-05004	Piston	1	2.5-3.5t
			22	69010316	GB/T91-2000 4*40	Cotter pin 4×40	1	1.8t
			-	69007675	GB/T91-5*45	Cotter pin 5×45	1	2.5-3.5t
			23	69023117	GB/T9458-M20*2	Nut M20×2 δ20	1	1.8t
			-	69094105	GB/T9459-1988	Nut M27×2 δ27	1	2.5-3.5t
			24	N/A	HL015-06-4A	Spacer	1	1.8t
			-	N/A	HL015-06-04A	Spacer Ⅱ	1	2.5t
			-	N/A	M30-06-4	Spacer Ⅱ	1	3.5t
			25	N/A	MB018-06-100L/R	Cylinder body	1	1.8t
			-	N/A	MB050-06L/R-100	Cylidiner body	1	2.5t
			-	N/A	MB030-06-100	Cylidiner body	1	3.5t
			26	69042049	20B80-09000	Pin shaft	1	
			27	69000053	GB/T93-10	Washer 10	1	
			28	69000123	GB/T5783-M10*20-8.8J	Bolt M10×20	1	

图71/Fig71.			倾斜油缸/TILT CYLINDER
FD18T-C4WE3	FD18T-C4WV3	FD18T-C4W（6）3	
FD25T-C4WE3	FD25T-C4WV3	FD25T-C4W（6）3	
FD35T-C4WE3	FD35T-C4WV3	FD35T-C4W（6）3	

1.8t倾斜升油缸选用表 TILT CYLINDER OPTION TABLE

前/后倾角 Tilt angle	物料ID ID.	倾斜缸右 Tilt cylinder R.H.	物料ID ID.	倾斜缸左 Tilt	起升高度 LIFTING HEIGHT
10°/12°	69104096	18B80-08000-10-12°	69070817	5000-	2.7m≤h≤4.8m
6°/6°	69104098	18B80-08000-6-6°	69070816	18B80-	4.8m＜h≤6m

图71/Fig71.			倾斜油缸/TILT CYLINDER
FD18T-C4WE3	FD18T-C4WV3	FD18T-C4W（6）3	
FD25T-C4WE3	FD25T-C4WV3	FD25T-C4W（6）3	
FD35T-C4WE3	FD35T-C4WV3	FD35T-C4W（6）3	

2.5t倾斜升油缸选用表 TILT CYLINDER OPTION TABLE

前/后倾角 Tilt angle	物料ID ID.	倾斜缸右 Tilt cylinder R.H.	物料ID ID.	倾斜缸左 Tilt	起升高度 LIFTING HEIGHT
10°/12°	69071616	25BY80-05000-10-12°	69104092	)6000	2.7m≤h≤4.7m
6°/6°	69071630	25BY80-05000-6-6°	69104094	25BY 80-	4.7m＜h≤6m

图71/Fig71.			倾斜油缸/TILT CYLINDER
FD18T-C4WE3	FD18T-C4WV3	FD18T-C4W（6）3	
FD25T-C4WE3	FD25T-C4WV3	FD25T-C4W（6）3	
FD35T-C4WE3	FD35T-C4WV3	FD35T-C4W（6）3	

3.5t倾斜升油缸选用表 TILT CYLINDER OPTION TABLE

前/后倾角 Tilt angle	物料ID ID.	倾斜缸右 Tilt cylinder R.H.	物料ID ID.	倾斜缸左 Tilt	起升高度 LIFTING HEIGHT
10°/12°	69042047	20B80-07000-10-12°	69104106	8000-	2.7m≤h≤4.7m
6°/6°	69042266	20B80-07000-6-6°	69104099	20B80-	4.7m＜h≤6m

图72/Fig72. 标牌/DECAL

FD18T-C4WE3 FD18T-C4WV3 FD18T-C4W（6）3

FD25T-C4WE3 FD25T-C4WV3 FD25T-C4W（6）3

FD35T-C4WE3 FD35T-C4WV3 FD35T-C4W（6）3

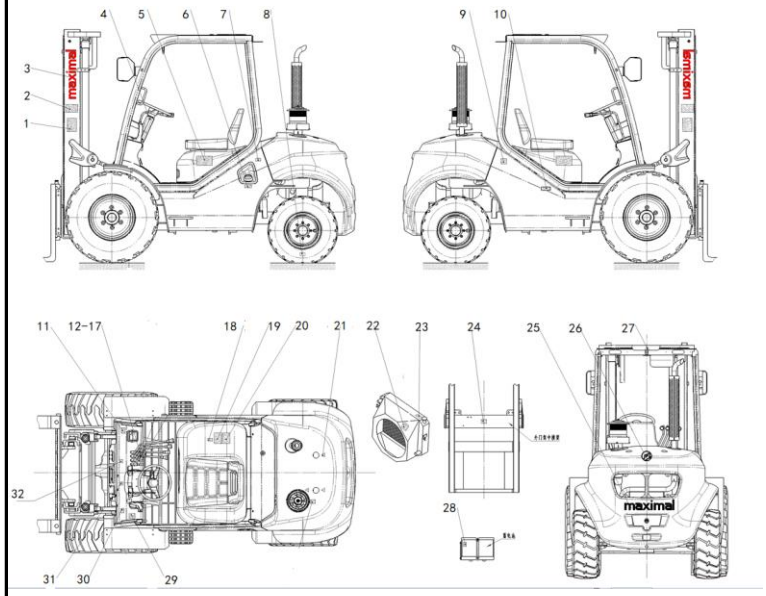

序号		代号	名称	数量	备注
Item No.		Part No.	Descripition	Q'ty	Remark
A		-	Decal	1	
01		M30391W0004	Lubrication chart decal	1	
02	69136434	M3039100001	Safety decal	2	
03	69000725	M3039100002-1	Must decal(Maximal)	2	
04	69138782	M3039100003	Turing lights decal	1	
05	69012149	M3539100003	Model decal	2	3.5T
-	69002265	M2549100003	Model decal	2	2.5T
-	69012145	M1839100002	Model decal	2	1.8T
06		MJ30491-00002	Fuel decal	1	
07	69136442	MJ30491-00007	Anti-collapse decal	1	
08	69136438	M3039100029	Tyre safety decal	2	
09	69136442	MJ30491-00007	Anti-collapse decal	1	
10	69136752	MJ30491-00001	Hydranlic oil decal	1	
11	69085843	35B91W-00018	Name plate decal	1	
-	69089717	35B91W-00021	Name plate decal	1	
-	69089378	35B91W-00017	Name plate decal	1	
-	69095816	35B91W-00015-1	Name plate decal	1	
-	69088847	35B91W-00015	Name plate decal	1	
12		M3039100018	Operation decal(fork postion)	1	
13		M3039100019	Operation decal(clamp)	1	
14		M3039100016	Operation decal(side shift)	1	
15		12E91-00003	Operation decal(rotate)	1	
16		M3039100015	Operation decal(tilt)	1	
17		M3039100017	eration decal(lifting & lowering)	1	
18	69136747	MJ30491-00010	Forbddien stand in front of mast decal	1	

图72/Fig72. 标牌/DECAL

FD18T-C4WE3 FD18T-C4WV3 FD18T-C4W（6）3

FD25T-C4WE3 FD25T-C4WV3 FD25T-C4W（6）3

FD35T-C4WE3 FD35T-C4WV3 FD35T-C4W（6）3

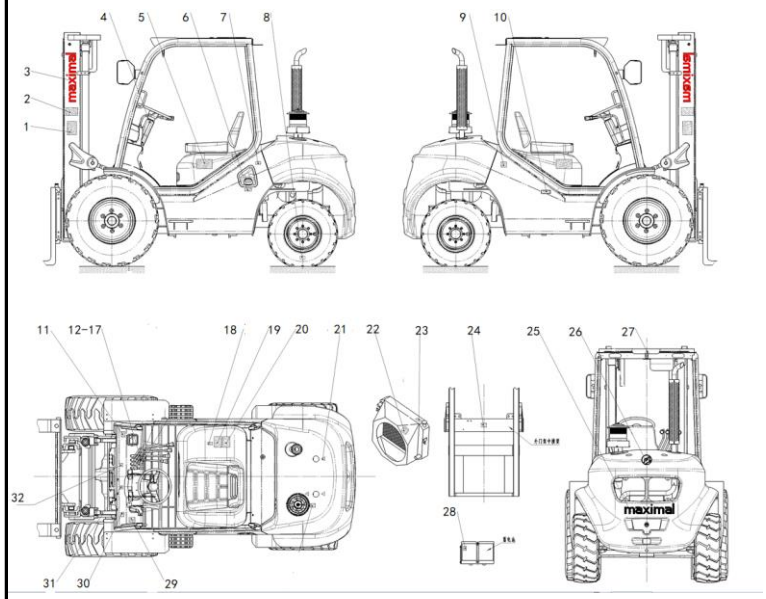

序号		代号	名称	数量	备注
Item No.		Part No.	Descripition	Q'ty	Remark
19		M30391W00007	Operating instruction decal	1	
20		M30391W00008	Operation rules decal	1	
21	69136437	M3039100021	Sling decal	2	
22	69136740	MJ30491-00008	Fan caution decal	1	
23	69089828	M3039100031	Anti-freeze added decal	1	
24	69136249	M3039100033	Pinch caution decal	1	
25	69009047	M3039100007-1	Brand decal(Maximal)	1	
26	69007659	M3039100006	Logo decal	1	
27	69136439	MJ30491-00004	Sling decal(small)(samll)	1	
28		M30391W00001	No flushing decal	1	
29	69092249	35B91W-00014	Load chart decal	1	3.5T
-	69092247	25BY91-00014	Load chart decal	1	2.5T
-	69096254	18B91W-00001	Load chart decal	1	1.8T
30		M30391W00016	CE decal	1	
31	69142366	M30391W00002	Noise decal	1	
32	69136436	M3039100013	Standing forbidden decal	1	