图1/Fig1. 发动机及安装/ENGINE ASS'Y

FD20/25/30/35T-AWE5、FD20/25/30/35T-AGK5

FD20/25/30/35T-AWV5、FG(L)20/25/30/35T-AWA5

FD20/25/30/35T-AG(1)5

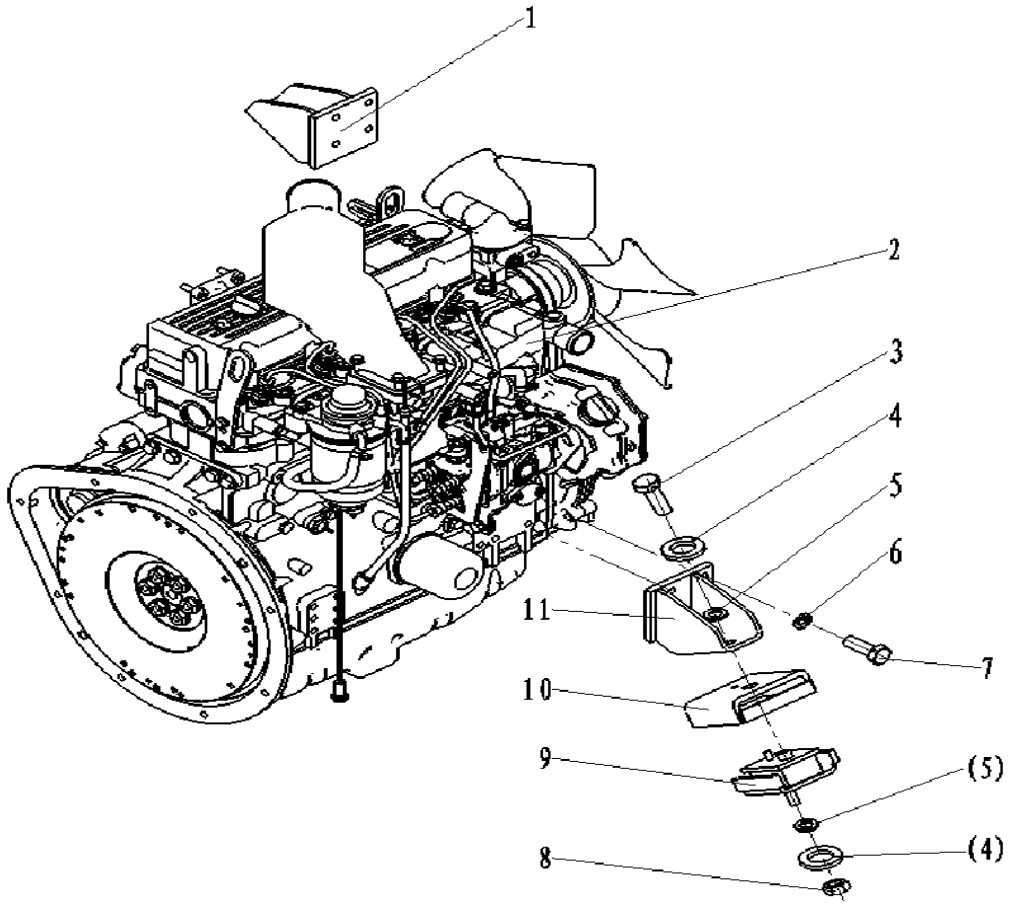

序号 Item No.		代号 Part No.	名称 Description	数量 Q'ty	备注 Remark
A		-	ENGINE ASS'Y	1	
1	69034308	A30416-04000	Engine bracket(right)	1	YANMAR98
-	69042527	A30216N-02000	Engine bracket(right)	1	NISSAN K25
-	69042682	A30416LL-02000	Engine bracket(right)	1	MITSUBISHI S4S
-		A30416XC-02000	Engine bracket(right)	1	XINCHAI（CHINA Ⅲ）
-	69059313	A30416D-02000	Engine bracket(right)	1	DACHAI（EU Ⅲ）
2	69005118	M30416Y01000	4TNE98 engine	1	YANMAR98
-	69003478	M30216N02000	K25 engine	1	NISSAN K25
-	69133434	M30416LS-01000-B1	S4S-455 engine	1	MITSUBISHI S4S
-	69070948	M3031603000-1	xinchai engine	1	XINCHAI（CHINA Ⅲ）
-	69023512	30416D-01000-3	CA498-05T3 engine	1	DACHAI（EU Ⅲ）
3	69000138	GB/T5786-M12*1.25*35-8.8J	Bolt M12×1.25×35	2	
4	69034253	A30413-00001	Washer	4	
5	69000054	GB/T93-12	Washer 12	4	
6	69000053	GB/T93-10	Washer 10	8	YANMAR、XINCHAI、DACHAI
-	69000053	GB/T93-10	Washer 10	6	NISSAN K25
-	69000054	GB/T93-12	Washer 12	8	MITSUBISHI S4S
7	69000128	GB/T5783-M10*30-8.8J	Bolt M10×30	8	YANMAR98
-	69000128	GB/T5783-M10*30-8.8J	Bolt M10×30	6	NISSAN K25
-	69000306	GB/T5783-M12*30-8.8J	Bolt M12×30	8	MITSUBISHI S4S
-	69000125	GB/T5783-M10*25-8.8J	Bolt M10×25	8	XINCHAI、DACHAI
8	69000315	GB/T6171-M12*1.5-8J	Nut M12×1.25	2	
9	69071048	A30413-01000A/02000A	Damper	2	

图1/Fig1. 发动机及安装/ENGINE ASS'Y

FD20/25/30/35T-AWE5、FD20/25/30/35T-AGK5

FD20/25/30/35T-AWV5、FG(L)20/25/30/35T-AWA5

FD20/25/30/35T-AG(1)5 、FD30/35T-AG(5)5

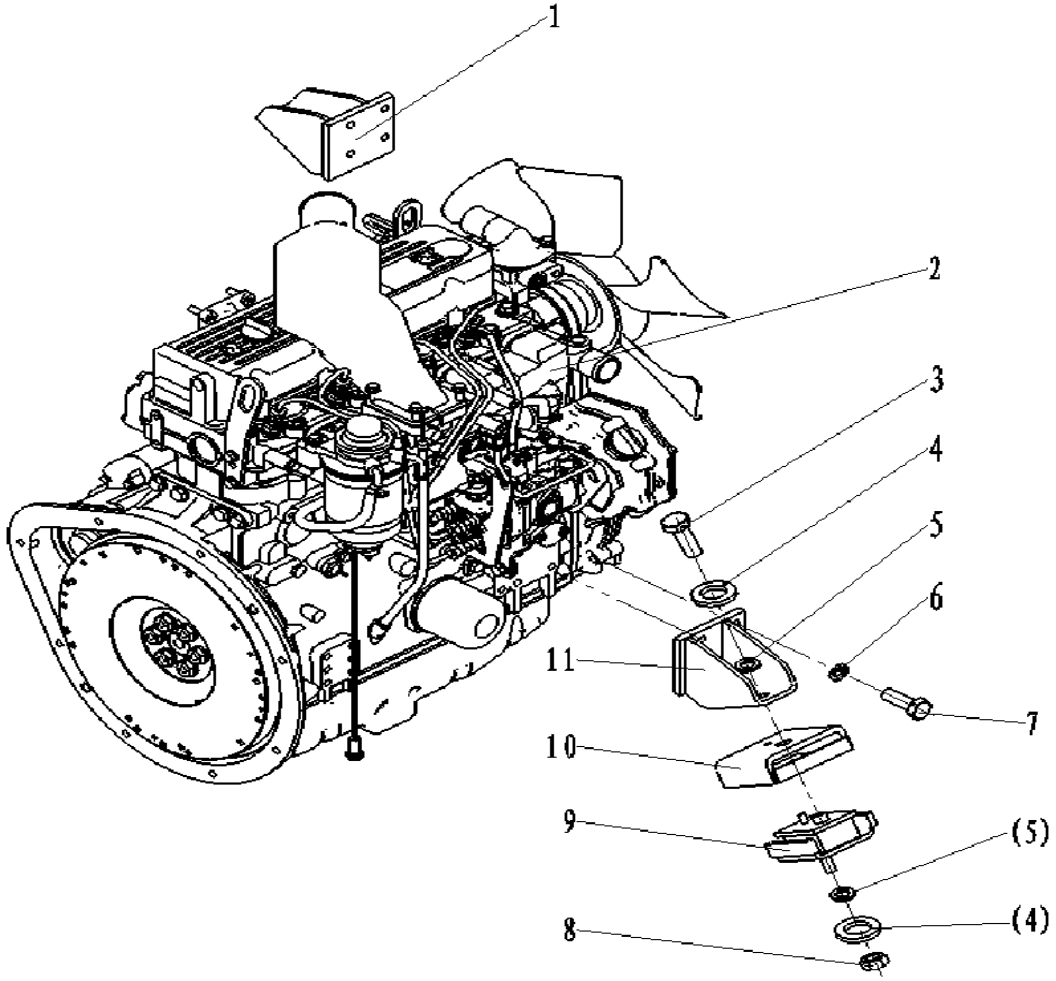

序号 Item No.		代号 Part No.	名称 Description	数量 Q'ty	备注 Remark
10		A30413-02000A	Rubber gasket cover	2	
11	69034307	A30416-03000	Engine bracket(left)	1	YANMAR98
-	69042526	A30216N-01000	Engine bracket(left)	1	NISSAN K25
-	69042681	A30416LL-01000	Engine bracket(left)	1	MITSUBISHI S4S
-	69046989	A30416XC-01000	Engine bracket(left)	1	XINCHAI（CHINA Ⅲ）
-	69059310	A30416D-01000	Engine bracket(left)	1	DACHAI（EU Ⅲ）

图2/Fig2. 发动机及安装/ENGINE ASS'Y

FG(L)20/25/30/35T-AWG3、FD20/25/30/35T-AG(2)3、FD30/35T-AG(5)3

FD20/25/30/35T-AWV3、FG(L)20/25/30/35T-AWA3

FD20/25/30/35T-AG(1)3、FD20/25/30/35T-AGK3

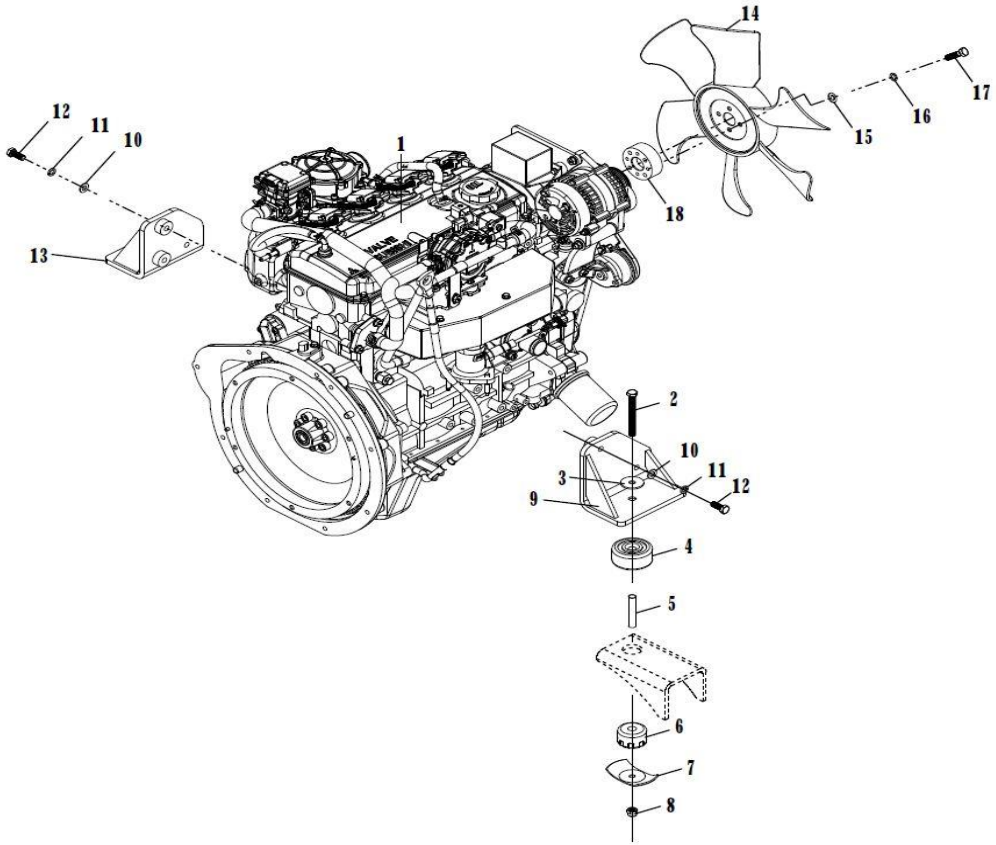

序号 Item No.		代号 Part No.	名称 Description	数量 Q'ty	备注 Remark
A		-	ENGINE ASS'Y	1	
1	69003478	M30216N02000	K25 engine	1	NISSAN K25
-	69070948	M3031603000-1	xinchai engine	1	XINCHAI（CHINA Ⅲ）
	69077008	M3031603000-3	xinchai engine	1	XINCHAI（CHINA Ⅲ）
-	69042567	M30416LS-01000-B	S4S-455 engine	1	MITSUBISHI S4S
-	69073520	A30416SY01000	PSI 2.4L engine	1	AEROSPACE PSI 2.4L
-	69073496	30416D-01000-4	CA498-05T3 engine	1	DACHAI（EU Ⅲ）
2	69005931	GB/T5782-M10*110-8.8J	Bolt M10×110	2	
3	69135089	M3031300001	Washer A	2	
4	69135090	M3031300003	Rubber damper A	2	
5	69135091	M3031300002	Steel casing	2	
6	69067117	M3031300004	Rubber damper B	2	
7	69135092	M3031300005	Washer B	2	
8		GB/T6182-M10-8.8级	Nut M10	2	
9	69026525	30416LL-02000	Engine bracket	2	MITSUBISHI S4S
-	69018544	M30216N04000	Engine bracket	1	NISSAN K25
-	69079541	A30416SY02000A	Engine bracket	1	AEROSPACE MITSUBISHI 4G64
10	69000125	GB/T5783-M10*25-8.8J	Bolt M10×25	7	
11	69000250	GB/T97.1-10	Washer 10	7	
12	69000053	GB/T93-10	Washer 10	7	
13	69018369	M30216N03000	Engine bracket	1	NISSAN K25
-	69079542	A30416SY03000A	Engine bracket	1	AEROSPACE MITSUBISHI 4G64
14	69069925	35BJ16-04000	Fan Φ440 (Multi-Wing)	1	仅AEROSPACE MITSUBISHI 4G64
15	69000085	GB/T96.1-8	Washer 8	4	仅AEROSPACE MITSUBISHI 4G64

图2/Fig2. 发动机及安装/ENGINE ASS'Y

FGL20/25/30/35T-AWG3、FD20/25/30/35T-AG(2)3、FD30/35T-AG(5)3

FD20/25/30/35T-AWV3、FG(L)20/25/30/35T-AWA3

FD20/25/30/35T-AG(1)3、FD20/25/30/35T-AGK3

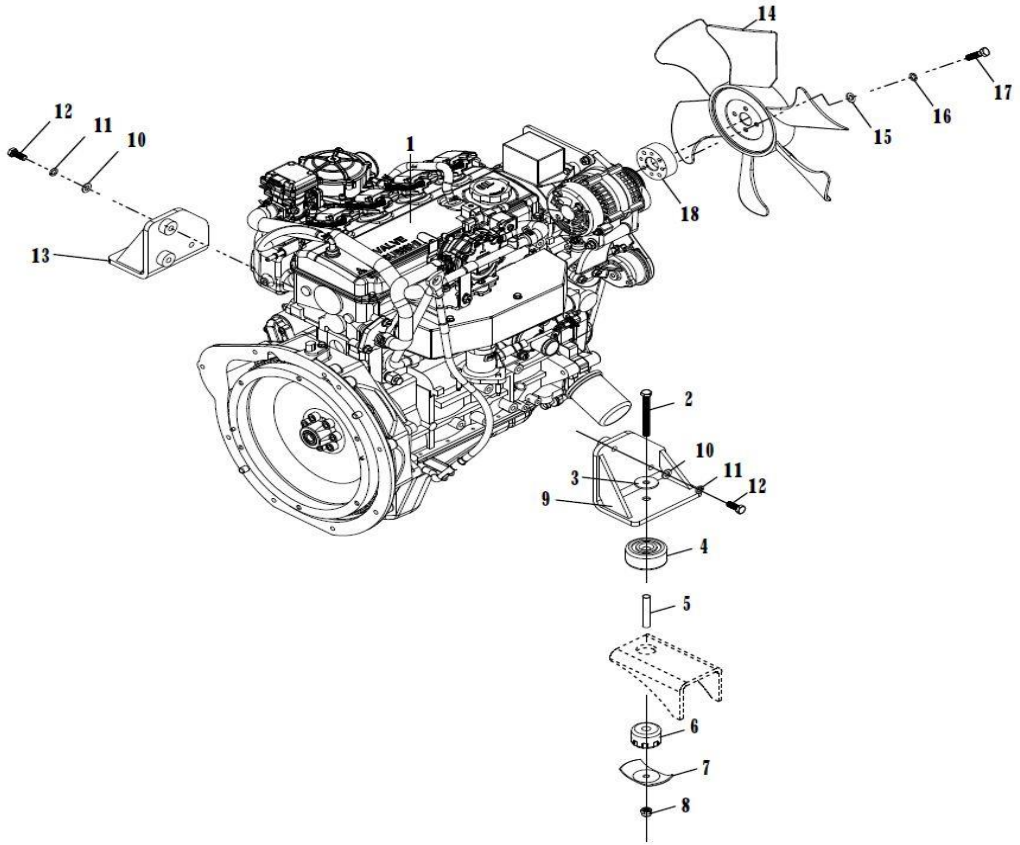

序号 Item No.		代号 Part No.	名称 Description	数量 Q'ty	备注 Remark
16	69000062	GB/T93-8	Washer 8	4	仅AEROSPACE MITSUBISHI 4G64
17	69017795	GB/T5783-M8*50-8.8J	Bolt M8×50	4	仅AEROSPACE MITSUBISHI 4G64
18	69063547	A30416SY00001	Fan gasket	1	仅AEROSPACE MITSUBISHI 4G64

图3/Fig3. 空滤器及安装/AIR CLEANER ASS'Y

FD20/25/30/35T-AWE、FGL20/25/30/35T-AWG、FD20/25/30/35T-AWV

FG(L)20/25/30/35T-AWA、FD20/25/30/35T-AG(1)、FD20/25/30/35T-AGK

FD30/35T-AG(5)

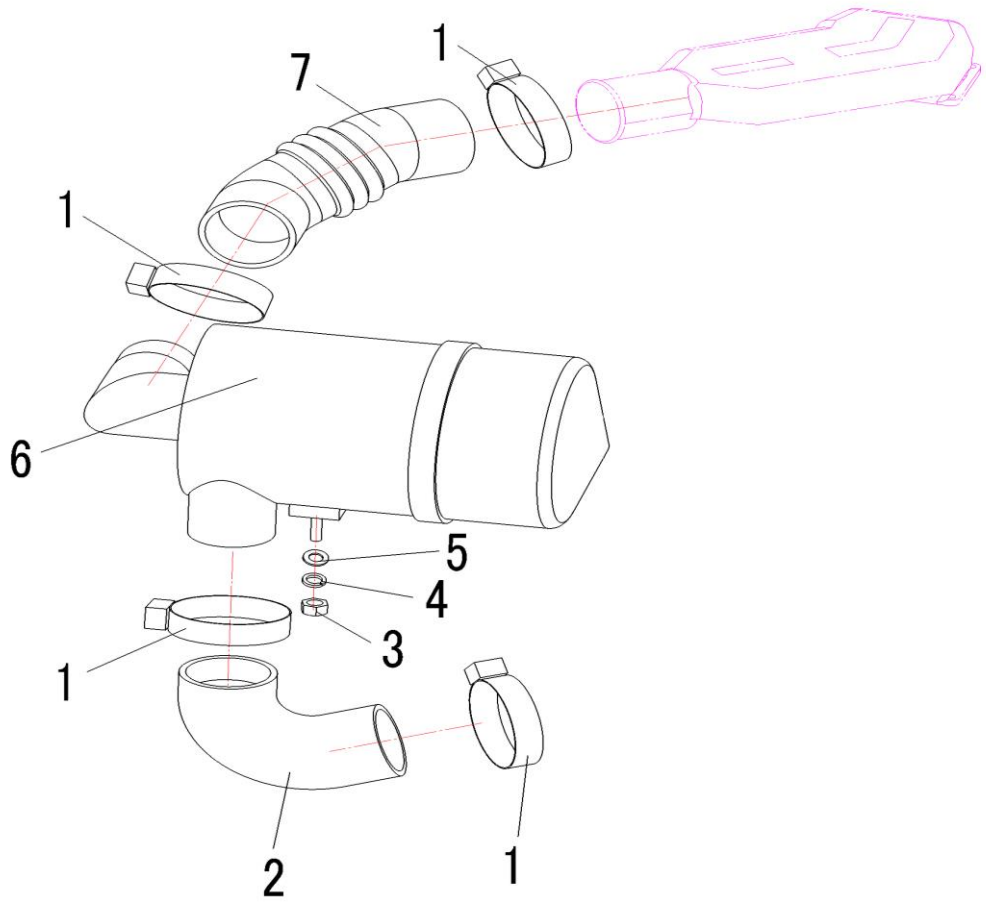

序号 Item No.		代号 Part No.	名称 Description	数量 Q'ty	备注 Remark
A		-	AIR CLEANER ASS'Y	1	
1	69036888	JB/T8870-70-90	Hose clamp d80	4	YANMAR98、XINCHAI、DACHAI
-	69036888	JB/T8870-70-90	Hose clamp d80	3/5	NISSAN K25、MITSUBISHI S4S
-	69036891	JB/T8870-40-60	Hose clamp d60	1	NISSAN K25
-	69047168	JB/T8870-60-80	Hose clamp d70	1	MITSUBISHI S4S
-	69036888	JB/T8870-70-90	Hose clamp d80	1	AEROSPACE MITSUBISHI 4G644G64
2	69036124	A30412-00001	Air cleaner hose(inlet)	1	
3	69000112	GB/T6170-M8-8J	Nut M8	2	
4	69000062	GB/T93-8	Washer 8	2	
5	69000259	GB/T97.1-8	Washer 8	2	
6	69001747	M3031201000	Air cleaner K127260-1	1	
7	69036125	A30412-00002	Air cleaner hose(outlet)	1	YANMAR98
-	69042521	A30212N-00001	Air cleaner hose(outlet)	1	NISSAN K25（单燃料）
-	69009996	M30612N00002	Air cleaner hose (outlet)	1	NISSAN K25（双燃料）
-	69009997	M30612N00001	Air cleaner hose (outlet)	1	NISSAN K25（双燃料）
-	69042679	A30412LL-00001	Air cleaner hose(outlet)	1	MITSUBISHI S4S
-		A30412XC-00001	Air cleaner hose(outlet)	1	XINCHAI
-	69057657	A30412LL00001	Air cleaner hose(outlet)	1	MITSUBISHI S4S（硬连接）
-	69047252	A3031200001	Air cleaner hose(outlet)	1	XINCHAI（硬连接）
	69063557	A30412SY00001	Air cleaner hose(outlet)	1	AEROSPACE MITSUBISHI 4G64
	69059309	A30412D-00001	Air cleaner hose(outlet)	1	DACHAI

图4/Fig4. 散热器及安装/COOLING SYSTEM

FD20/25/30/35T-AWE、FD30/35T-AG(5)

FGL20/25/30/35T-AWG、FD20/25/30/35T-AG(1)

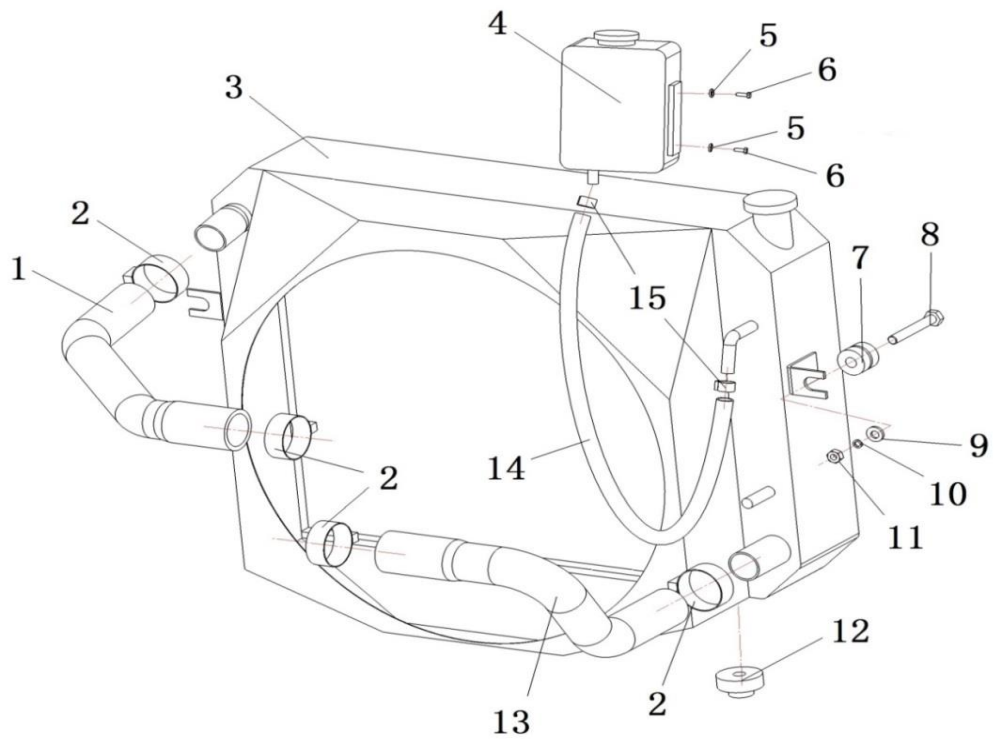

序号 Item No.		代号 Part No.	名称 Description	数量 Q' ty	备注 Remark
A		-	Cooling system	1	
1	69034301	A30421-00001	Water inlet hose	1	YANMAR98
-	69047015	A30421XC-00001	Water inlet hose	1	XINCHAI
-	69063563	A30421SY00001	Water inlet hose	1	AEROSPACE MITSUBISHI 4G64
2	69036891	JB/T8870-40-60	Hose Clamp d50	4	XINCHAI
3	69037585	A30421-01000	Radiator ass'y	1	YANMAR98
-	69047016	A30421XC-01000	Radiator ass'y	1	XINCHAI（液力）
-	69087946	A30421XC-01000A(B)-1	Radiator ass'y	1	XINCHAI（液力）
-	69088633	A30421SY01000A(B)	Radiator ass'y	1	AEROSPACE PSI 2.4L
-	69047253	A3032101000	Radiator ass'y	1	XINCHAI（机械）
4	69001664	M30221N02000	Coolant recovery tank	1	
5	69000060	GB/T93-6	Washer 6	2	
6	69000190	GB/T5783-M6*16-8.8J	Bolt M6×16	2	
7	69001849	M3032100010	Rubber damper B	2	
8	69000289	M3032100012	Radiator bolt	2	
9	69000084	GB/T96.1-12	Washer 12	2	
10	69000085	GB/T96.1-8	Washer 8	2	
11	69000292	GB/T889.1-M8-8J	Nut M8	2	
12	69001850	M3032100009	Rubber damper A	2	
13	69034302	A30421-00002	Water outlet hose	1	YANMAR98
-	69047017	A30421XC-00002	Water outlet hose	1	XINCHAI
-	69063567	A30421SY00002	Water outlet hose	1	AEROSPACE MITSUBISHI 4G64
14	69106535	A30421-00003	Rubber Hose Φ8×2-600	1	
15	69000052	JB/T8870-10-16	Hose clamp d16	2	

图5/Fig5. 散热器及安装/COOLING SYSTEM

FD20/25/30/35T-AWV、FD20/25/30/35T-AGK

FG(L)20/25/30/35T-AWA

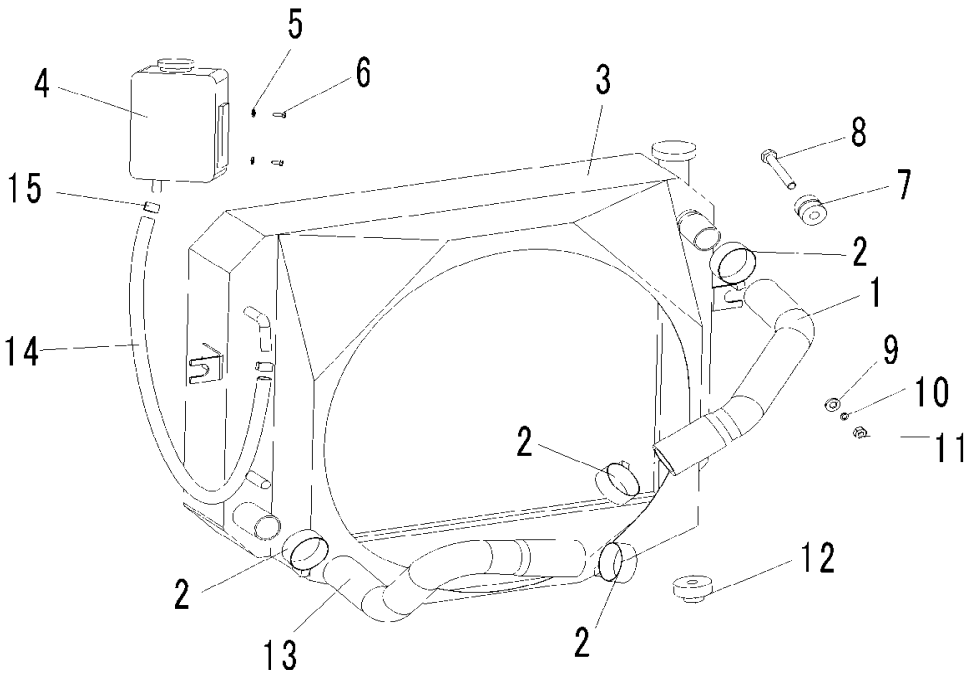

序号 Item No.		代号 Part No.	名称 Description	数量 Q' ty	备注 Remark
A		-	Cooling system	1	
1	69042532	A30221N-00002	Water inlet hose	1	NISSAN K25
-	69059559	A30421LS-00001	Water inlet hose	1	MITSUBISHI S4S
	69001834	M3032100001	Water inlet hose	1	DACHAI（EU Ⅲ）
2	69036889	JB/T8870-32-50	Hose Clamp d50	4	NISSAN K25
-	69036889	JB/T8870-32-50	Hose Clamp d50	2	MITSUBISHI S4S
-	69036891	JB/T8870-40-60	Hose Clamp d55	2	MITSUBISHI S4S
3	69088592	A30221N-01000A(B)	Radiator ass'y	1	NISSAN K25
-		A30421LL-01000	Radiator ass'y	1	MITSUBISHI S4S
-	69092824	A30421LL-01000A(B)-2	Radiator ass'y(Plate-fin)	1	MITSUBISHI S4S
-	69093228	A30221N01000A(B)-1	Radiator ass'y(plate-fin)	1	NISSAN K25（硬连接）
-	69059316	A30421D-01000	Radiator ass'y	1	DACHAI（EU Ⅲ）
4	69001664	M30221N02000	Coolant recovery tank	1	
5	69000060	GB/T93-6	Washer 6	2	
6	69000190	GB/T5783-M6*16-8.8J	bolt M6×16	2	
7	69001849	M3032100010	Rubber damper B	2	
8	69000289	M3032100012	Radiator bolt	2	
9	69000084	GB/T96.1-12	Washer 12	2	
10	69000085	GB/T96.1-8	Washer 8	2	
11	69000292	GB/T889.1-M8-8J	Nut M8	2	
12	69001850	M3032100009	Rubber damper A	2	
13	69042530	A30221N-00001	Water outlet hose	1	NISSAN K25

图5/Fig5. 散热器及安装/COOLING SYSTEM MOUNT

FD20/25/30/35T-AWV、FD20/25/30/35T-AG(2)

FG(L)20/25/30/35T-AWA、FD20/25/30/35T-AGK

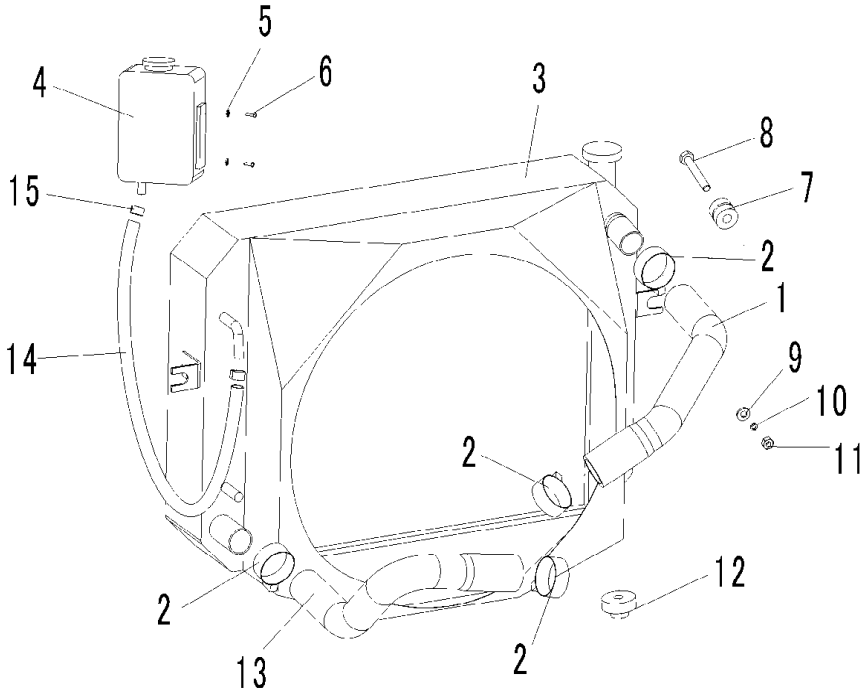

序号 Item No.		代号 Part No.	名称 Description	数量 Q' ty	备注 Remark
-	69042685	A30421LL-00001	Water outlet hose	1	MITSUBISHI S4S
-	69059315	A30421D-00001	Water outlet hose	1	DACHAI（EU Ⅲ）
14	69106535	A30421-00003	Rubber Hose Φ8×3-600	1	
15	69000052	JB/T8870-10-16	Hose Clamp d16	2	

图6/Fig6. 燃油装置及安装/FUEL SYSTEM

FD20/25/30/35T-AWE、FD20/25/30/35T-AGK

FD20/25/30/35T-AWV、FD20/25/30/35T-AG(1)

FD20/25/30/35T-AG(5)

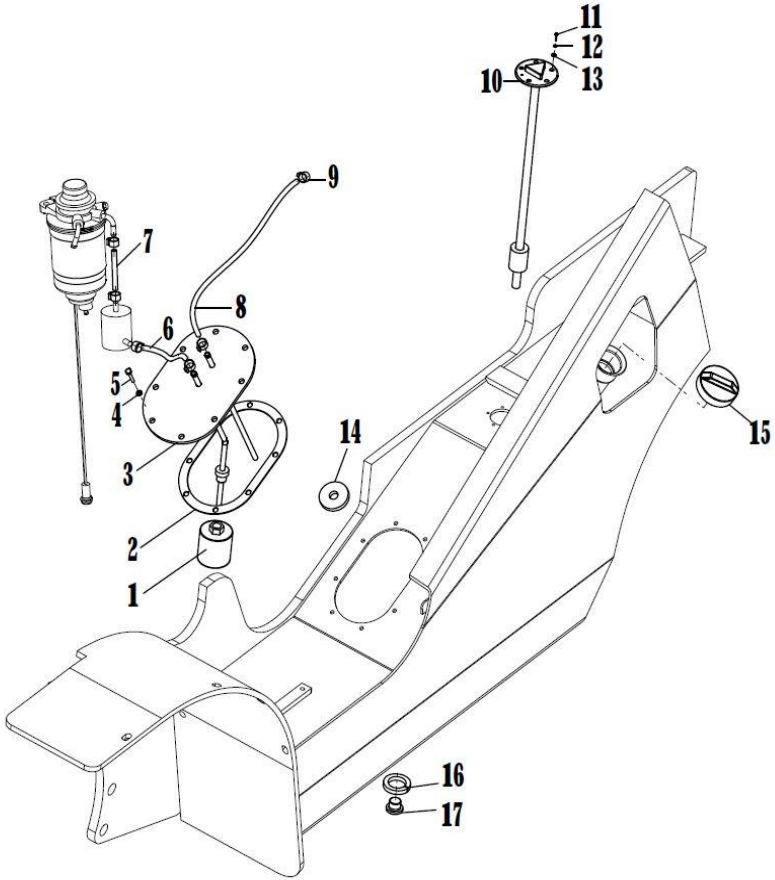

序号 Item No.		代号 Part No.	名称 Description	数量 Q' ty	备注 Remark
A		-	FUEL SYSTEM ASS'Y	1	
1	69006121	M3032202000	Fuel filter (Y0606)	1	
2	69000679	M3032200007	Gasket	1	
3	69034300	A30422-01000	Cover plate ass'y	1	
4	69000062	GB/T93-8	Washer 8	8	
5	69000309	GB/T5783-M8*16-8.8J	Bolt M8×16	8	
6	69115018	A30422-00001	Hose φ8×3-(280)	1	YANMAR98、DACHAI
7	69105810	A30422-00003	Hose φ8×3-(550)	1	YANMAR98、DACHAI
-	69127361	M3032200005	Hose φ6×3-(550)	1	XINCHAI
-	69105822	A30422LL-00001	Hose φ8×3-(1200)	1	MITSUBISHI S4S
8	69115017	A30422-00002	Hose φ8×3-(650)	1	YANMAR98、DACHAI
-	69105822	A30422LL-00001	Hose φ8×3-(1200)	1	MITSUBISHI S4S
-	69105811	M3032200006	Hose φ6×3-(1050)	1	XINCHAI
9	69000052	JB/T8870-10-16	Hose clamp d16	6	
10	69011885	M3032204000	Fuel quantity sensor(TBRG4111)	1	
11	69007977	GB/T818-M5*12-4.8J	Screw M5×12	5	
12	69000059	GB/T93-5	Washer 5	5	
13	69000257	GB/T97.1-5	Washer 5	5	
14	69035702	M3032200003	Magnet 60*32*10	1	
15	69001925	M3032200001	Oiling cap	1	
16	69000357	JB/T982-20	Washer 20	1	
17	69003910	M3032200002	Drain plug	1	

图7/Fig7. 燃油装置及安装/FUEL SYSTEM

FG(L)20/25/30/35T-AWA

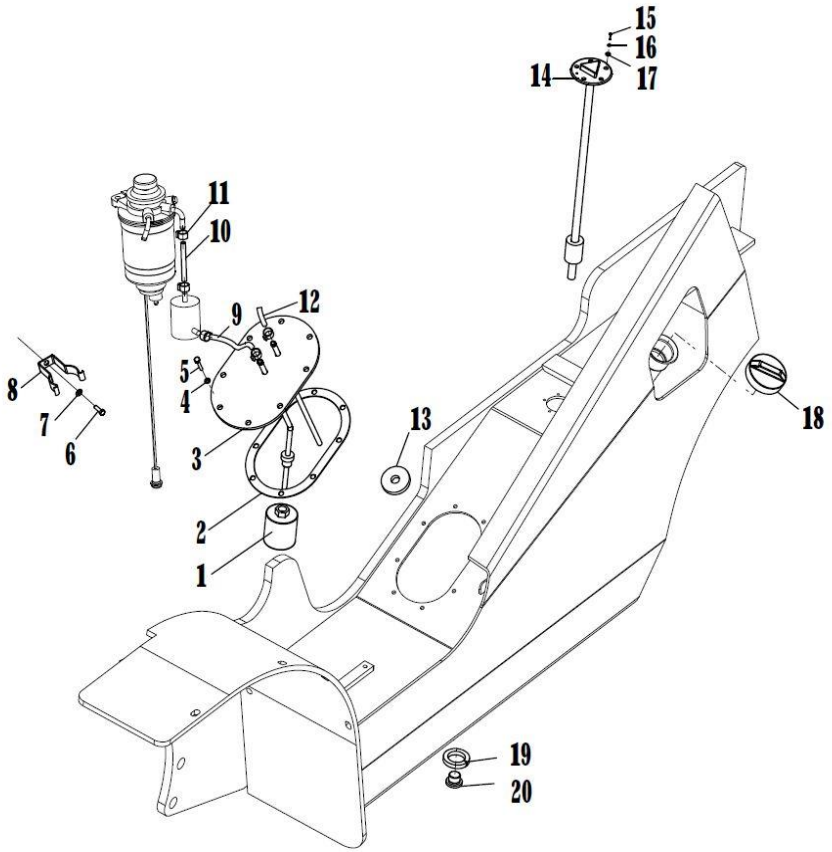

序号 Item No.		代号 Part No.	名称 Description	数量 Q' ty	备注 Remark
A		-	FUEL SYSTEM ASS'Y	1	NISSAN K25
1	69006121	M3032202000	Fuel filter (Y0606)	1	
2	69000679	M3032200007	Gasket	1	
3	69034300	A30422-01000	Cover plate ass'y	1	
4	69000062	GB/T93-8	Washer 8	8	
5	69000309	GB/T5783-M8*16-8.8J	Bolt M8×16	8	
6	69016549	GB/T70.1-M8*16-8.8J	Hex.screw M8×16	1	
7	69000062	GB/T93-8	Washer 8	1	
8	69043096	M30222N00004	Fuel filter bracket	1	
9	69105810	A30422-00003	Hose Φ8×3-230	1	
10	69042535	M30222N00001	Hose Φ6×3-160	1	
11	69036894	JB/T8870-16-25	Hose clamp d16	4	
12	69042534	M30222N00003	Seal cap	1	
13	69035702	M3032200003	Magnet 60*32*10	1	
14	69011885	M3032204000	Fuel quantity sensor(TBRG4111)	1	
15	69007977	GB/T818-M5*12-4.8J	Screw M5×12	5	
16	69000059	GB/T93-5	Washer 5	5	
17	69000257	GB/T97.1-5	Washer 5	5	
18	69001925	M3032200001	Oiling cap	1	
19	69000357	JB/T982-20	Washer 20	1	
20	69003910	M3032200002	Drain plug	1	

图7-1/Fig7-1. 燃油装置及安装/FUEL SYSTEM

FGL20/25/30/35T-AWG3

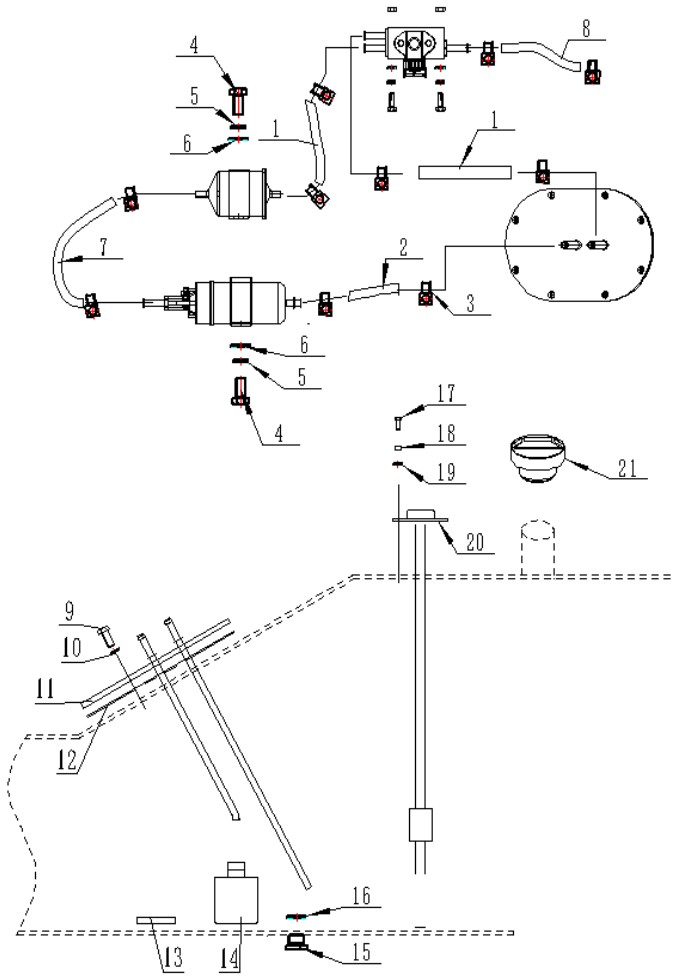

序号 Item No.		代号 Part No.	名称 Description	数量 Q' ty	备注 Remark
A		-	FUEL SYSTEM ASS'Y	1	AEROSPACE MITSUBISHI 4G64
1	69105823	A30422SY00001	Hose φ8×3-900	2	
2	69105825	A30422SY00003	Hose φ8×3-300	1	
3	69000052	JB/T8870-10-16	Hose clamp d16	10	
4	69000002	GB/T5783-M12*25-8.8J	Bolt M12×25	2	
5	69000054	GB/T93-12	Washer 12	2	
6	69000251	GB/T97.1-12	Washer 12	2	
7	69105824	A30422SY00002	Hose φ8×3-150	1	
8	69105822	A30422LL-00001	Hose φ8×3-600	1	
9	69000309	GB/T5783-M8*16-8.8J	Bolt M8×16	8	
10	69000062	GB/T93-8	Washer 8	8	
11	69034300	A30422-01000	Cover plate ass'y	1	
12	69000679	M3032200007	Gasket	1	
13	69035702	M3032200003	Magnet 60*32*10	1	
14	69006121	M3032202000	Fuel filter (Y0606)	1	
15	69003910	M3032200002	Drain plug	1	
16	69000357	JB/T982-20	Washer 20	1	
17	69007977	GB/T818-M5*12-4.8J	Screw M5×12	5	
18	69000059	GB/T93-5	Washer 5	5	
19	69000257	GB/T97.1-5	Washer 5	5	
20	69011885	M3032204000	Fuel quantity sensor(TBRG4111)	1	
21	69001925	M3032200001	Oiling cap	1	

图8/Fig8. 消音器及安装/MUFFLER ASS'Y

FD20/25/30/35T-AWE5、FD20/25/30/35T-AGK

FG(L)20/25/30/35T-AWA、FD20/25/30/35T-AG（2）

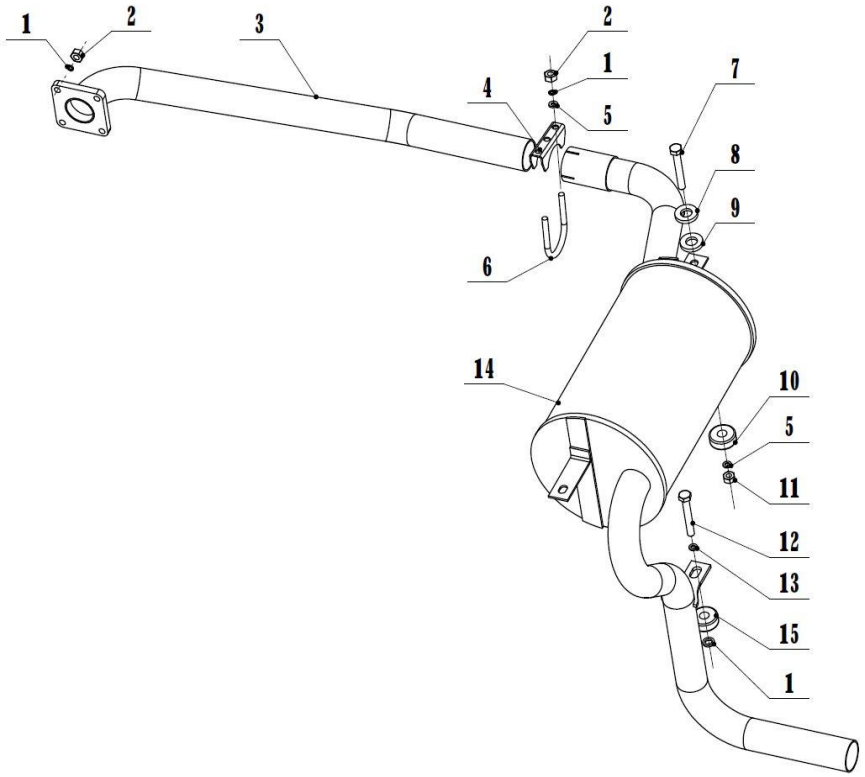

序号 Item No.		代号 Part No.	名称 Description	数量 Q'ty	备注 Remark
A		-	Muffler ass'y	1	
1	69000062	GB/T93-8	Washer 8	7	YANMAR98
-	69000062	GB/T93-8	Washer 8	5	NISSAN K25
2	69000112	GB/T6170-M8-8J	Nut M8	6	YANMAR98
-	69000112	GB/T6170-M8-8J	Nut M8	4	NISSAN K25
3	69073536	A30423-02000A	Exhaust pipe	1	YANMAR98
-	69042539	A30223N-01000	Exhaust pipe	1	NISSAN K25
-	69059317	A30423D-01000	Exhaust pipe	1	DACHAI
4	69015167	M3032300003	Stopper	1	
5	69000259	GB/T97.1-8	Washer 8	4	
6	69069037	30S23-00001	U-Bolt	1	
7	69087428	M3032300001A	Muffler bolt	2	
8	69006706	GB/T96.1-10	Washer 10	2	
9	69065608	A30423-00002	Rubber damper	2	
10	69001992	M3032300002	Rubber damper	2	
11	69000292	GB/T889.1-M8-8J	Nut M8	2	
12	69039549	A30423-00001	Step bolt	1	
13	69000251	GB/T97.1-12	Washer 12	1	
14	69034298	A30423-01000	Muffler	1	3-3.5T
-	69039550	A20423-01000	Muffler	1	2-2.5T
15	69065608	A30423-00002	Rubber damper	2	

图8-1/Fig8-1. 消音器及安装/MUFFLER ASS'Y

FGL20/25/30/35T-AWG3

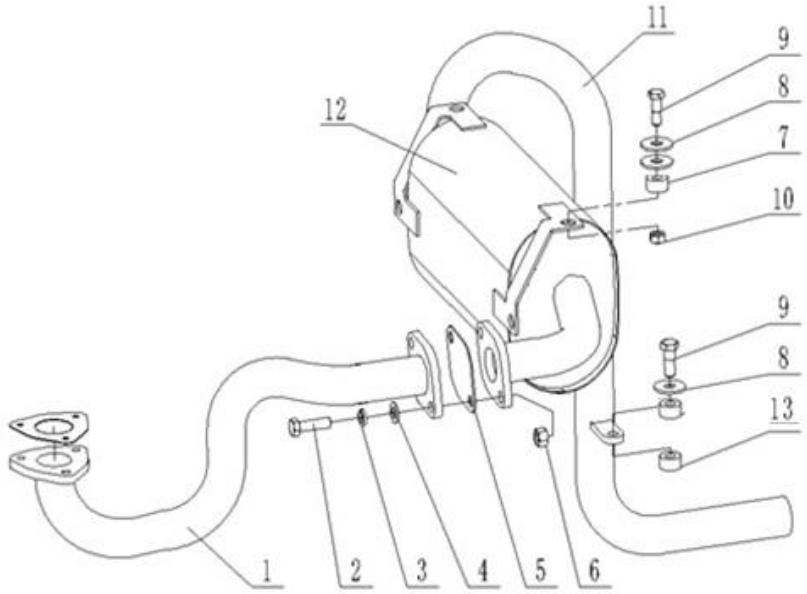

序号 Item No.		代号 Part No.	名称 Description	数量 Q'ty	备注 Remark
A		-	Muffler ass'y	1	AEROSPACE MITSUBISHI 4G64
1	69063568	A30423SY01000	Exhaust pipe	1	
2	69000132	GB/T5783-M10*40-8.8J	Bolt M12×40	4	
3	69000054	GB/T93-12	Washer 12	4	
4	69000251	GB/T97.1-12	Washer 12	4	
5	69063571	A30423SY00001	Gasket	2	
6	69010313	GB/T889.1-M12-8J	Nut M12	4	
7	69001992	M3032300002	Rubber damper	2	
8	69006706	GB/T96.1-10	Washer 10	2	
9	69039549	A30423-00001	Muffler bolt	2	
10	69000292	GB/T889.1-M8-8J	Nut M8	2	
11	69063582	A30423SY04000	Exhaust pipe	1	
12	69063581	A30423SY03000	Muffler	1	
13	69065608	A30423-00002	Rubber damper	4	

图9/Fig9. 消音器及安装/MUFFLER ASS'Y

FD20/25/30/35T-AWV

FD20/25/30/35T-AG(1)

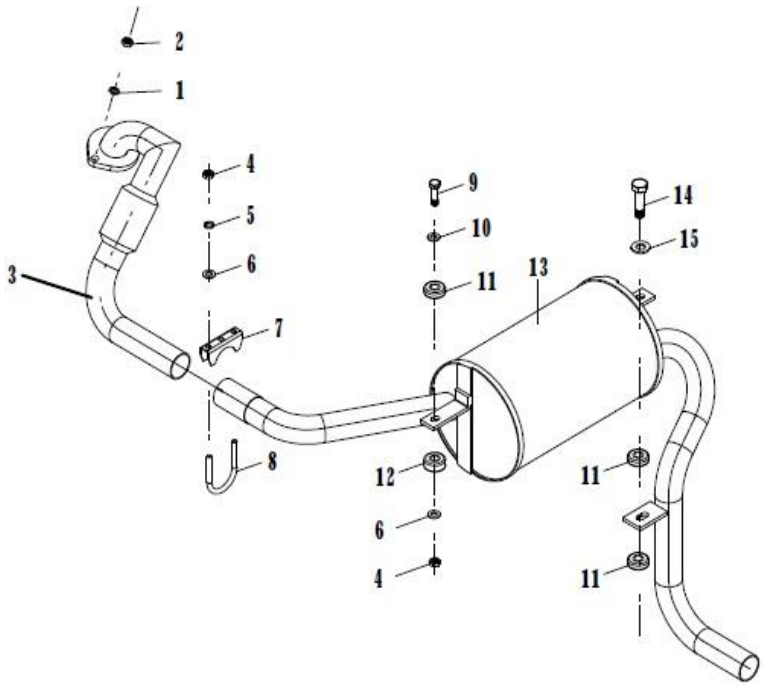

序号 Item No.		代号 Part No.	名称 Description	数量 Q'ty	备注 Remark
A		-	Muffler ass'y	1	
1	69000053	GB/T93-10	Washer 10	2	
2	69000313	GB/T6171-M10*1.25-8J	Nut M10	2	
3	69042696	A30423LL-02000	Exhaust pipe	1	
-	69046994	A30423XC-01000	Exhaust pipe	1	XINCHAI
-	69057696	A30423LL01000	Exhaust pipe	1	MITSUBISHI S4S（硬连接）
-	69047255	A3032301000	Exhaust pipe	1	XINCHAI（硬连接）
4	69000292	GB/T889.1-M8-8J	Nut M8	2	
5	69000062	GB/T93-8	Washer 8	2	
6	69000259	GB/T97.1-8	Washer 8	4	
7	69015167	M3032300003	Stopper	1	
8	69069037	30S23-00001	U-Bolt	1	
9	69087428	M3032300001A	Muffler bolt	2	
10	69000053	GB/T93-10	Washer 10	2	
11	69065608	A30423-00002	Rubber damper	4	
12	69001992	M3032300002	Rubber damper(Withstanding Heat)	2	
13	69042695	A30423LL-01000	Muffler	1	3-3.5T
-	69042714	A20423LL-01000	Muffler	1	2-2.5T
14	69039549	A30423-00001	Step bolt	1	
15	69000251	GB/T97.1-12	Washer 12	1	

图10/Fig10. 转换装置及安装（汽油机）/CONVERSION SYSTEM (GASOLINE)

FG(L)20/25/30/35T-AWA、FGL20/25/30/35T-AWG

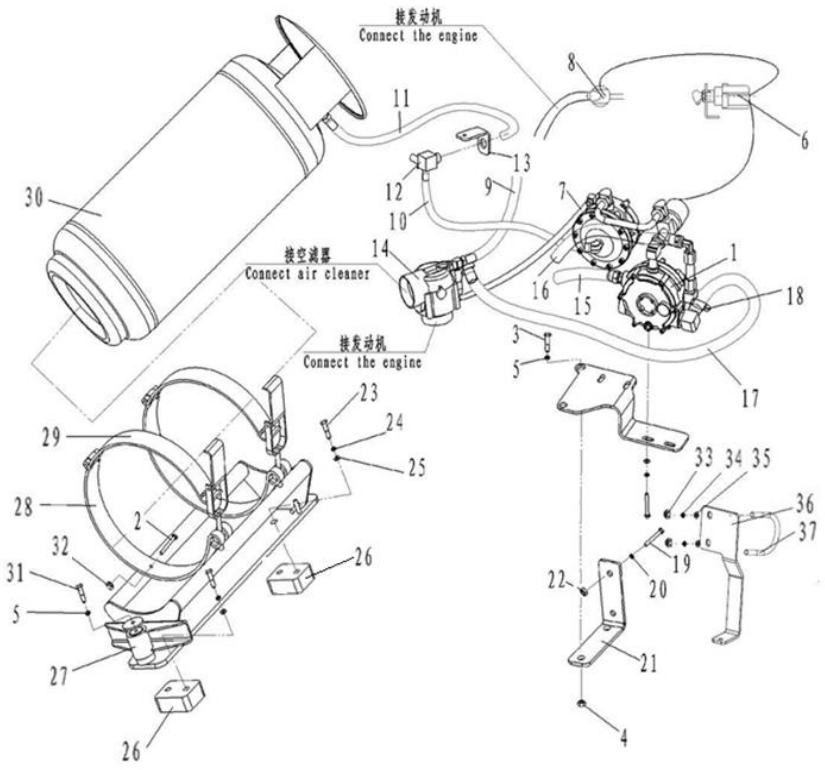

序号 Item No.		代号 Part No.	名称 Description	数量 Q'ty	备注 Remark
A		M30D71N00000	Conversion System ASS'Y	1	
-		M30672N00000	Conversion System ASS'Y	1	
1	69100720	M30672N01000	Carburetor and filter ass'v	1	
-	69136710	M30D71N02000	Carburetor and filter ass	1	
2	69136711	GB/T819.2-1997-M10*40	Crosshead Bolt M10×40	4	
3	69000123	GB/T5783-M10*20-8.8J	Bolt M10×20	2	
4	69000103	GB/T6170-M10-8J	Nut M10	2	
5	69000053	GB/T93-10	Washer 10	3	
6	69136243	M30672N07000	GAS-LPG Switch	1	
7	69123797	M30672N00006	Vacuum hose	1	
8	69123800	M30672N04000	Solenoid valve	1	
9	69123798	M30672N00005	Hose	1	
10	69123799	M30672N05000	Gas hose	1	
-	69136712	M30672N05000A	Gas hose	1	
-	69117517	U3049722103		1	
11	69100636	M30672N06000	H.P. hose	1	
-	69136713	M30672N06000A	H.P. hose	1	
-	69117519	U3049722104	H.P. hose	1	
12	69067346	M30672N03000	Tee connector	1	
13	69007933	M30672N00002	Pressure release valve br	1	
14	69136246	M30672N02000	Mixer	1	
-	69009868	M30D71N01000	Mixer	1	
15	69127789	M30672N00004	Water hose	1	
16	69127790	M30672N00007	Water hose	1	
17	69123796	M30672N00003	Gas hose	1	

图10/Fig10. 转换装置及安装（汽油机）/CONVERSION SYSTEM(GASOLINE)

FG(L)20/25/30/35T-AWA、FD20/25/30/35T-AWG

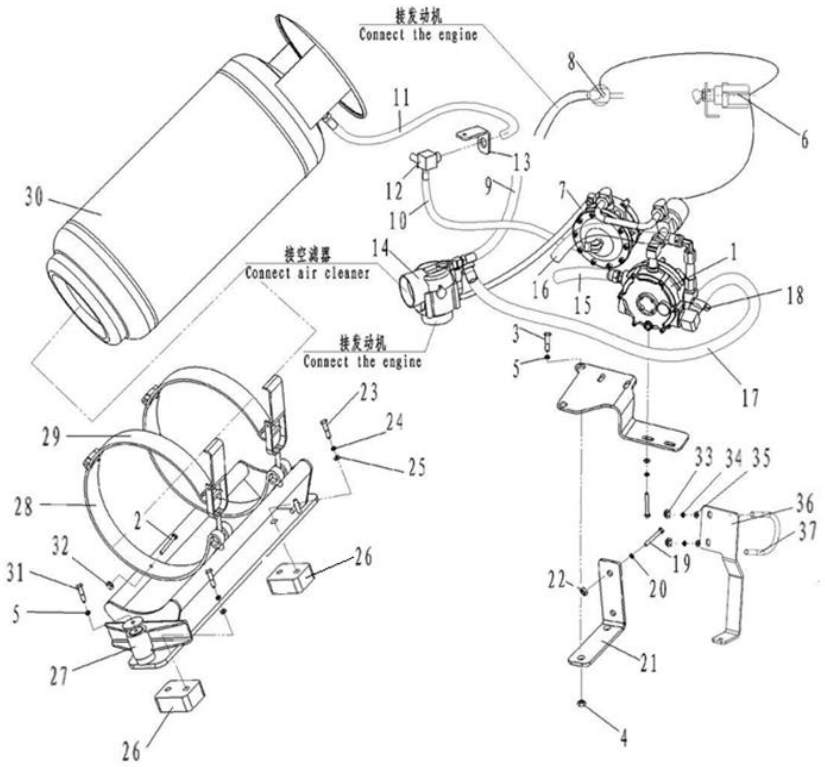

序号 Item No.		代号 Part No.	名称 Description	数量 Q' ty	备注 Remark
18	69136801	JB/T8870-1999-d32	Hose clamp d32	6	
19	69000198	GB/T5783-M8*20-8.8J	Bolt M8×20	2	
20	69000062	GB/T93-8	Washer 8	2	
21	69007932	M30672N00001	Bracket	1	
22	69000112	GB/T6170-M8-8J	Nut M8	2	
23	69023413	GB/T5782-M12*65-8.8J	Bolt M12×65	3	
24	69000054	GB/T93-12	Washer 12	3	
25	69000251	GB/T97.1-12	Washer 12	3	
26	69007098	M30670N00001	Rubber pad	2	
-	69098833	M30670N00007	Rubber damper Ⅰ	2	
27	69003153	M30670N01000	LPG tank bracket ass'y	1	
28	69136714	M30670N00003	Bottom fastening sleeve	2	
29	69136715	M30670N00002	Top fastening sleeve	2	
30	69001520	M30670N03000	LPG tank	1	
31	69000125	GB/T5783-M10*25-8.8J	Bolt M10×25	1	
32	69136716	GB/T6175-2000	Nut M10	4	
33	69000111	GB/T6170-M6-8J	Nut M6	2	
34	69000060	GB/T93-6	Washer 6	2	
35	69000258	GB/T97.1-6	Washer 6	2	
36	69133193	U3049722101-Black	Solenoid valve holder	1	
37	69108224	U3049722102	U-bolt	1	

图11/FIG11. 电气系统 / ELECTRIC SYSTEM

FD20/25/30/35T-AWE5

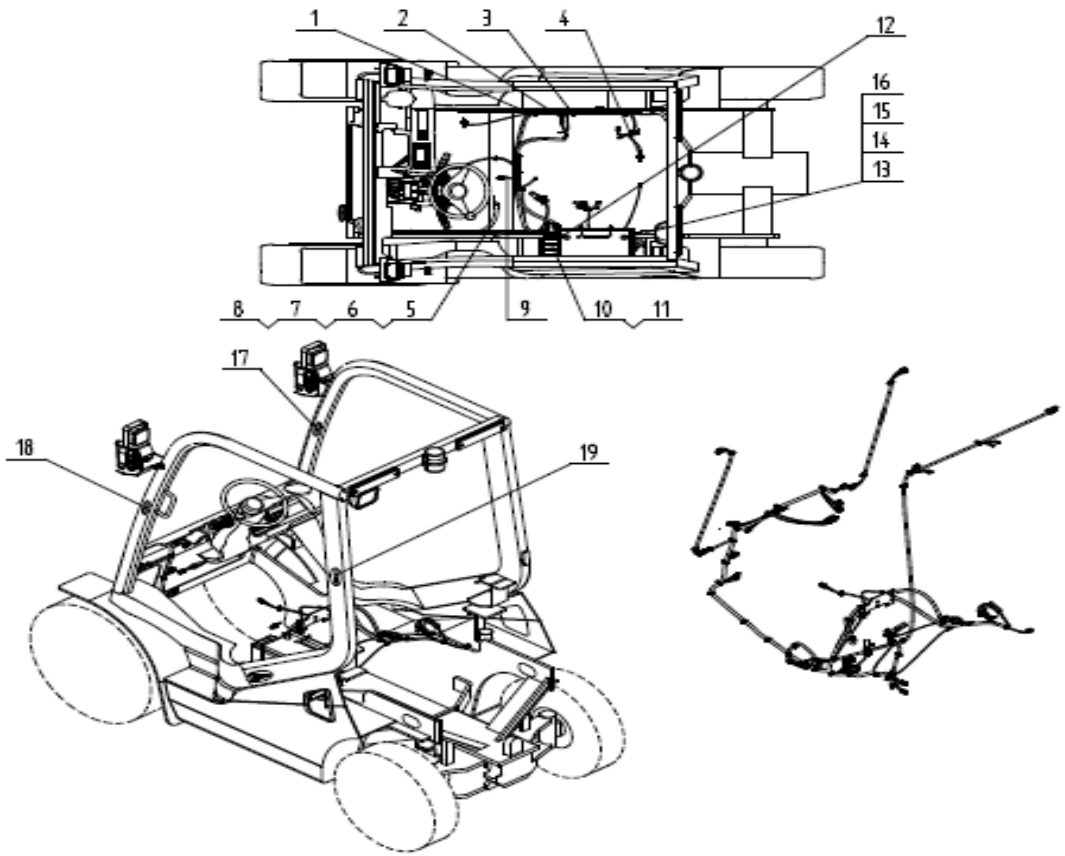

序号 Item No.		代号 Part No.	名称 Description	数量 Q' ty	备注 Remark
A	69035311	A30424-00000-4	Electric system	1	
1	69036772	A30424-01100	Main wiring harness	1	
2		A30424-01101	Fuse	1	
3	69045731	LS45731	Nylon cable ties	按需 On	D 6.4
4	69001847	U30424LS02002	Water temperature sensor WG430	1	
5	69041292	U3042401500	Grounding wire	1	
6	69000189	GB/T5783-M6*12-8.8J	Bolt M6*12	1	
5	69000083	GB/T96.1-6	Washer 6	1	
8	69000060	GB/T93-6	Washer 6	1	
9	69080540	A30424-00001	Brake short wiring	1	
10	69037965	A30424-09100	Electric box	1	
11	69000102	GB/T818-M6*12-4.8J	Bolt M6*12	4	
12	69065973	A30424-01600A	Battery cable(+)	1	
13	69065975	A30424-01700A	Battery cable(-)	1	
14	69039751	GB/T819.1-M8*12-8.8J	Bolt M8*12	1	
15	69000259	GB/T97.1-8	Washer 8	1	
16	69000062	GB/T93-8	Washer 8	1	
17	69021907	30324-04000	Front light wiring harness(right)	1	
18	69019048	30324-03000	Front light wiring harness(left)	1	
19	69036775	A30424-01500	Rear light wiring harness	1	
20					
21					
22					
23					
24					

图12/FIG12. 电气系统 / ELECTRIC SYSTEM

FD20/25/30/35T-AWE5

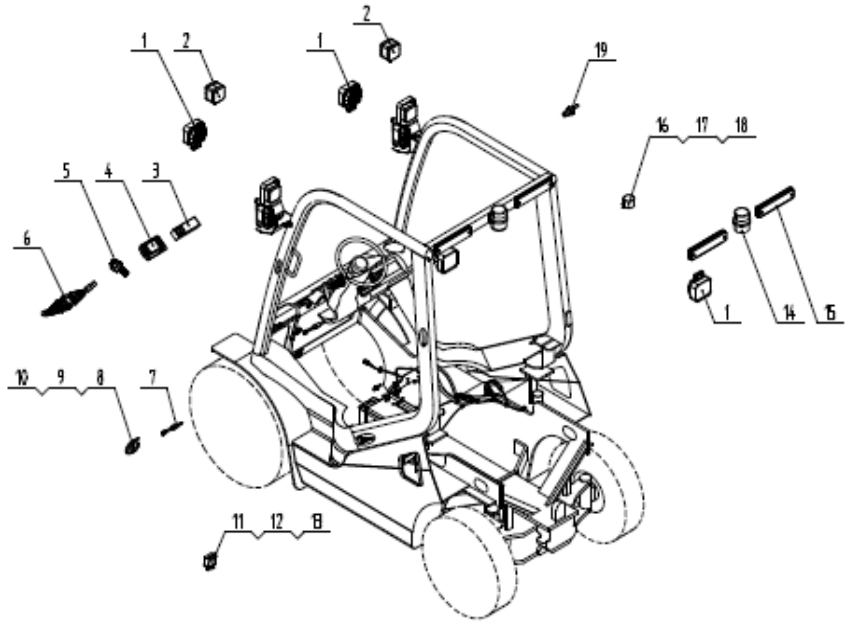

序号 Item No.		代号 Part No.	名称 Description	数量 Q' ty	备注 Remark
1	69044061	A30424-02103	Head light	3	
2	69044060	A30424-02104	Front combination lamp	2	
3	69039792	A30424-02200	Control switch ass'y	1	
4	69071648	A30424-02500	Display HZB184YM-MKS(YANMAR)	1	
5	69021669	30424-00016	Combination switch	1	
6	69037964	A30424-02202	Key switch	1	
7	69044167	A30424-02201	Brake switch	1	JK613B
8	69006074	A25724-02005	Horn	1	
9	69000309	GB/T5783-M8*16-8.8J	Bolt M8*16	1	
10	69000259	GB/T97.1-8	Washer 8	1	
11	69071648	A30424-02500	Q.G.S controller	1	发动机配套
12	69000190	GB/T5783-M6*16-8.8J	BoltM6*16	1	
13	69000060	GB/T93-6	Washer 6	1	
14	69037956	A30424-02102	Rear combination lamp	2	
15	69044061	A30424-02103	Caution light	1	
16	69000379	A25724-02006	Buzzer	1	
17	69000190	GB/T5783-M6*16-8.8J	Bolt M6*16	1	
18	69000060	GB/T93-6	Washer 6	1	
19	69001956	U3042402004	Oil temperature sensor	1	

图13/FIG13. 电气系统 / ELECTRIC SYSTEM

FD20/25/30/35T-AWV5；FD20/25/30/35T-AWV3

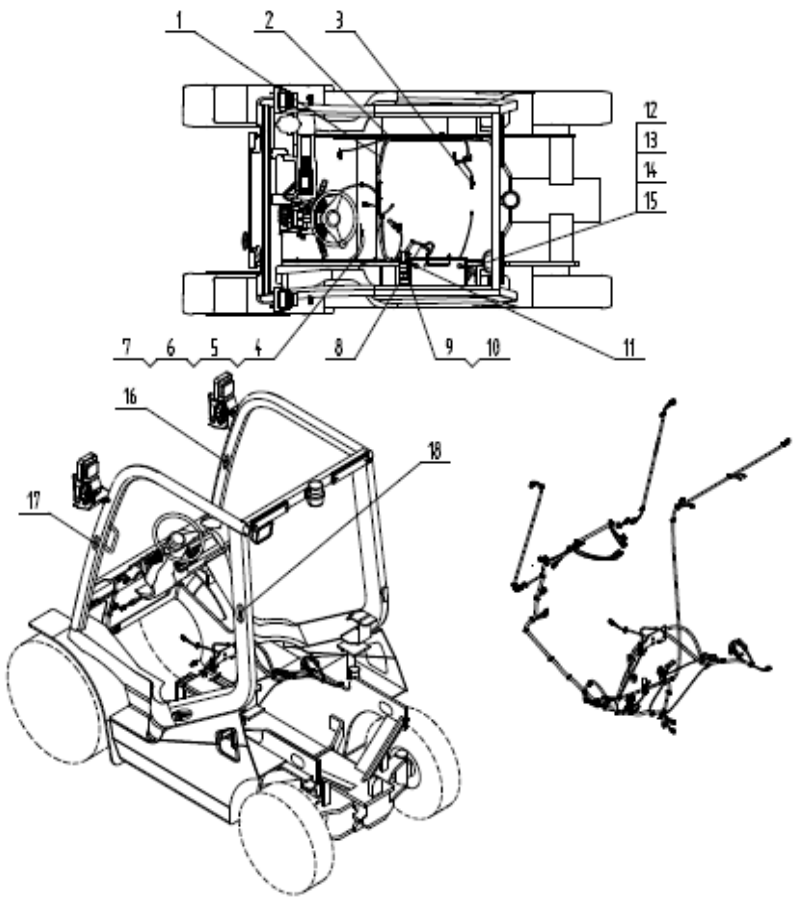

序号 Item No.		代号 Part No.	名称 Description	数量 Q' ty	备注 Remark
A	69042727	A30424LL-00000-1	Electric system	1	
1	69092491	A30424LL-01100A	Main wiring harness	1	
2	69045731	LS45731	Nylon cable ties	按需 On	
3	69001847	U30424LS02002	Water temperature sensor WG430	1	
4	69041292	U3042401500	Grounding wire	1	
5	69000189	GB/T5783-M6*12-8.8J	Bolt M6*12	1	
6	69000083	GB/T96.1-6	Washer 6	1	
7	69000060	GB/T93-6	Washer 6	1	
8	69045336	30424L-01001	Fuse	1	
9	69037965	A30424-09100	Electric box	1	
10	69000102	GB/T818-M6*12-4.8J	Bolt M6*12	4	
11	69065974	A30424LL-01600A	Battery cable(+)	1	
12	69065975	A30424-01700A	Battery cable(-)	1	
13	69039751	GB/T819.1-M8*12-8.8J	Bolt M8*12	1	
14	69000259	GB/T97.1-8	Washer 8	1	
15	69000062	GB/T93-8	Washer 8	1	
16	69019048	30324-03000	Front light wiring harness(left)	1	
17	69021907	30324-04000	Front light wiring harness(right)	1	
18	69036775	A30424-01500	Rear light wiring harness	1	

图14/FIG14. 电气系统 / ELECTRIC SYSTEM

FD20/25/30/35T-AWV5；FD20/25/30/35T-AWV3

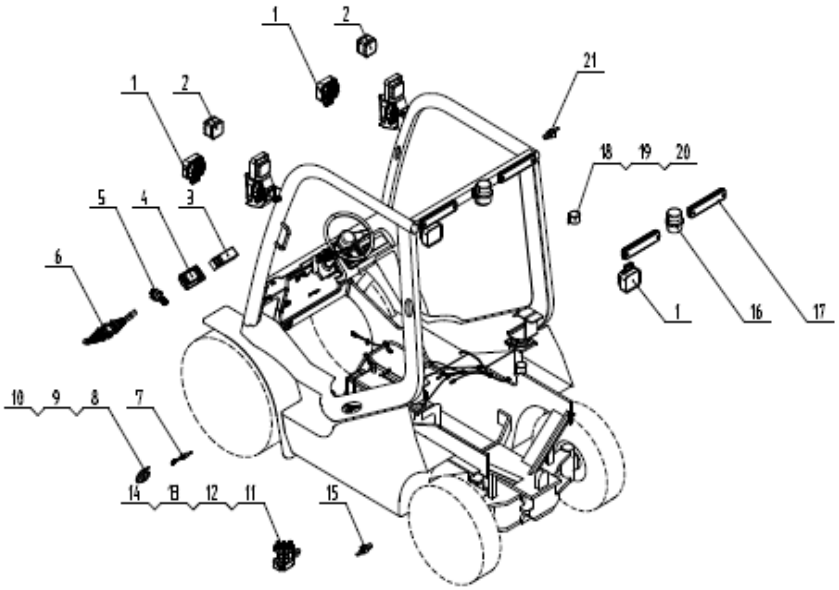

序号 Item No.		代号 Part No.	名称 Description	数量 Q' ty	备注 Remark
1	69044061	A30424-02103	Head light	3	
2	69044060	A30424-02104	Front combination lamp	2	
3	69039792	A30424-02200	Control switch ass'y	1	
4	69052682	A30424XC-02400	Display	1	
5	69037964	A30424-02202	Key switch	1	
6	69021669	30424-00016	Combination switch	1	
7	69044167	A30424-02201	Brake switch	1	
8	69006074	A25724-02005	Horn	1	
9	69039751	GB/T819.1-M8*12-8.8J	Bolt M8*12	1	
10	69000062	GB/T93-8	Washer 8	1	
11	69139309	32A66-19101	Start Relay	1	
12	69070246	GB/T818-M5*10-4.8J	Screw M5*10	2	
13	69000257	GB/T97.1-5	Washer 5	2	
14	69000059	GB/T93-5	Washer 5	2	
15	69003027	30324-00038	Water temperature sensor	1	
16	69009359	A25724-02004	Caution light	1	
17	69037956	A30424-02102	Rear combination lamp	2	
18	69000379	A25724-02006	Buzzer	1	
19	69000190	GB/T5783-M6*16-8.8J	Bolt M6*16	1	
20	69000060	GB/T93-6	Washer 6	1	
21	69001956	U3042402004	Oil temperature sensor	1	

图15/FIG15. 电气系统 / ELECTRIC SYSTEM

FG(L)20/25/30/35T-AWA5；FG(L)20/25/30/35T-AWA3

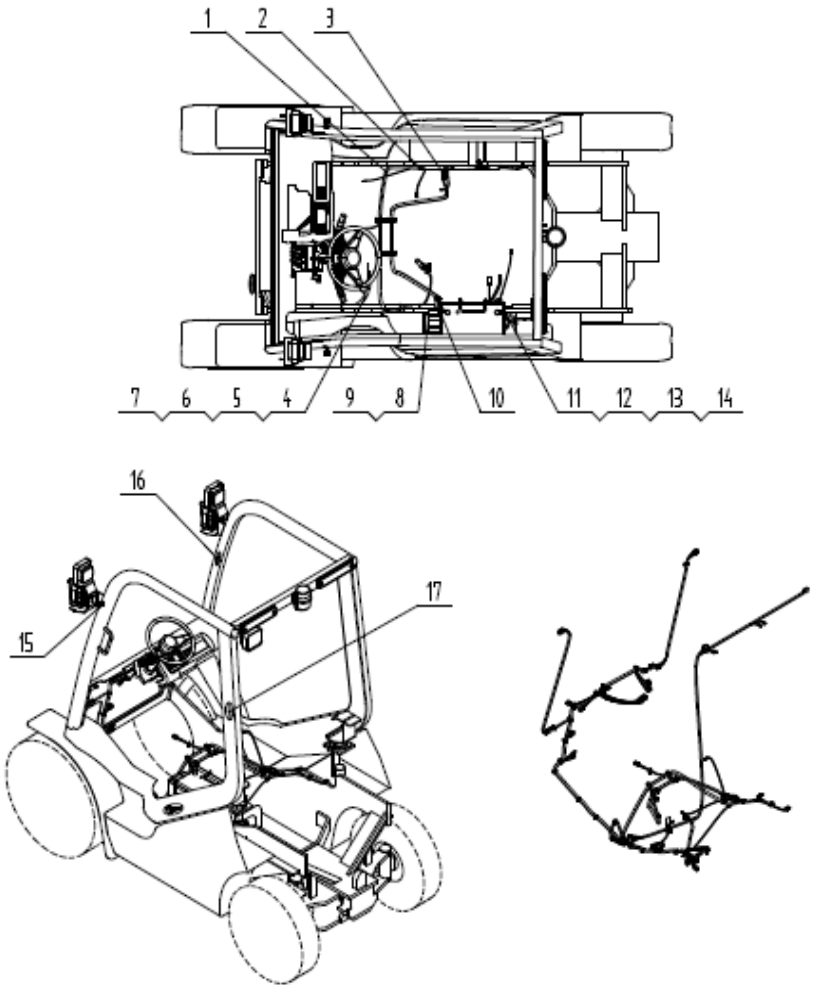

序号 Item No.		代号 Part No.	名称 Description	数量 Q' ty	备注 Remark
A	69052226	A30224N-00000-2	Electric system	1	
1	69092489	A30224N-01100A	Main wiring harness	1	
2	69045731	LS45731	Nylon cable ties	按需 On	
3	69012271	30324-01001	Fuse	1	
4	69041292	U3042401500	Grounding wire	1	
5	69000189	GB/T5783-M6*12-8.8J	Bolt M6*12	1	
6	69000083	GB/T96.1-6	Washer 6	1	
7	69000060	GB/T93-6	Washer 6	1	
8	69037965	A30424-09100	Electric box	1	
9	69000102	GB/T818-M6*12-4.8J	Bolt M6*12	4	
10	69023599	30324M-01105A	Battery cable(+)	1	
11	69065975	A30424-01700A	Battery cable(-)	1	
12	69039751	GB/T819.1-M8*12-8.8J	Bolt M8*12	1	
13	69000259	GB/T97.1-8	Washer 8	1	
14	69000062	GB/T93-8	Washer 8	1	
15	69019048	30324-03000	Front light wiring harness(left)	1	
16	69021907	30324-04000	Front light wiring harness(right)	1	
17	69036775	A30424-01500	Rear light wiring harness	1	

图16/FIG16. 电气系统 / ELECTRIC SYSTEM

FG(L)20/25/30/35T-AWA5；FG(L)20/25/30/35T-AWA3

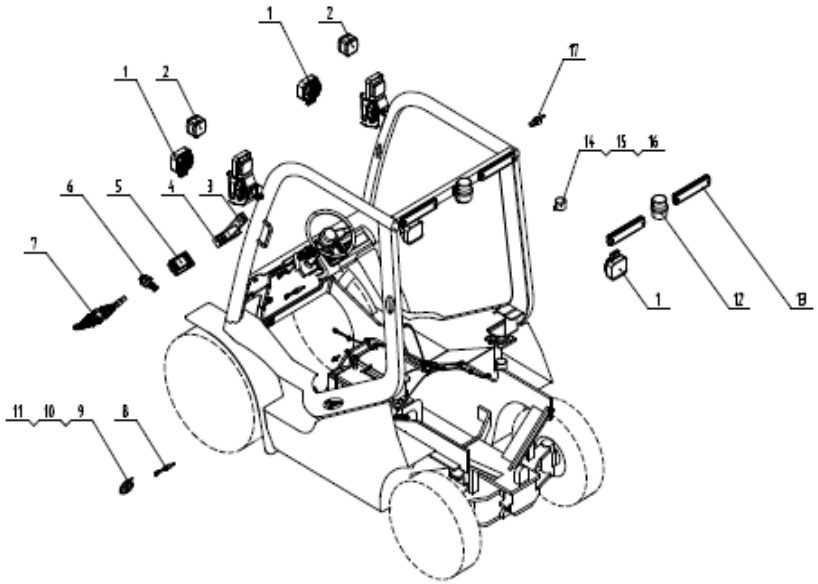

序号 Item No.		代号 Part No.	名称 Description	数量 Q' ty	备注 Remark
1	69044061	A30424-02103	Head light	3	
2	69044060	A30424-02104	Front combination lamp	2	
3	69044167	A30424-02201	Fuel selection switch	1	
4	69039792	A30424-02200	Control switch	1	
5	69071649	A30224N-02500	Display	1	
6	69037964	A30424-02202	Key switch	1	
7	69021669	30424-00016	Combination switch	1	
8	69044167	A30424-02201	Brake switch	1	
9	69006074	A25724-02005	Horn	1	
10	69039751	GB/T819.1-M8*12-8.8J	Bolt M8*12	1	
11	69000062	GB/T93-8	Washer 8	1	
12	69009359	A25724-02004	Caution light	1	
13	69037956	A30424-02102	Rear combination lamp	2	
14	69000379	A25724-02006	Buzzer	1	
15	69000190	GB/T5783-M6*16-8.8J	Bolt M6*16	1	
16	69000060	GB/T93-6	Washer 6	1	
17	69001956	U3042402004	Oil temperature sensor	1	

图17/FIG17. 电气系统 / ELECTRIC SYSTEM

FD20/25/30/35T-AGK5；FD20/25/30/35T-AG（2）5；FD20/25/30/35T-AG（2）3

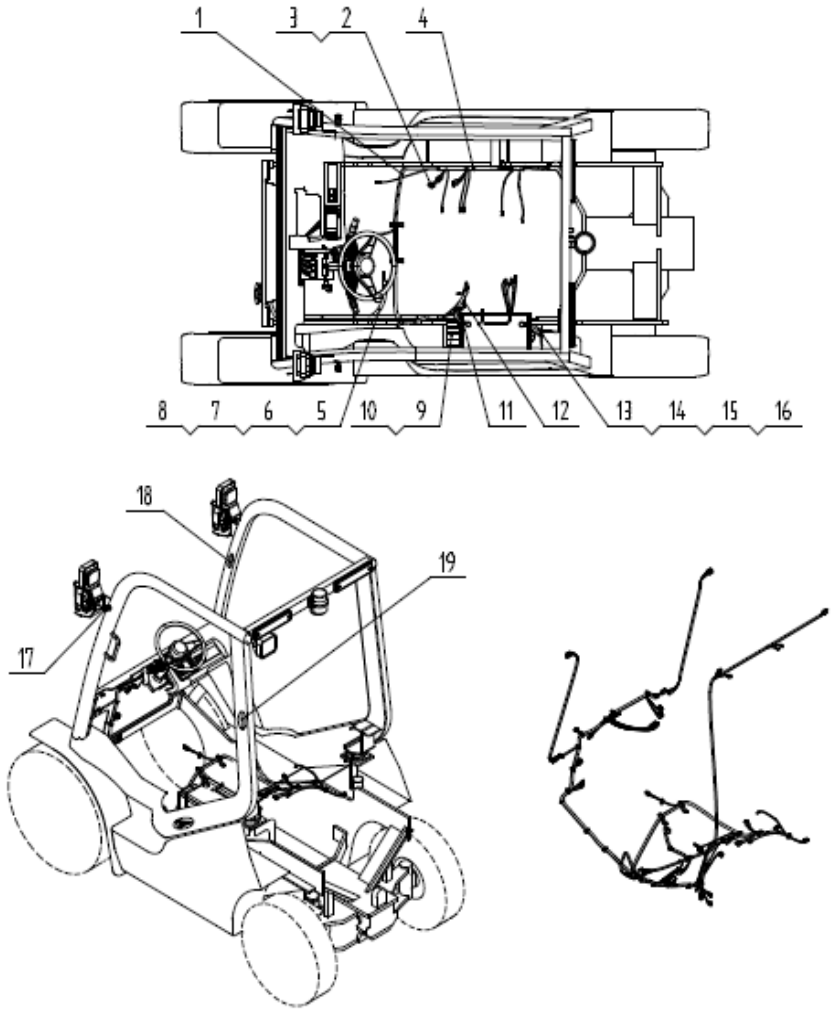

序号 Item No.		代号 Part No.	名称 Description	数量 Q' ty	备注 Remark
A	69067907	A30424D-00000-1	Electric system	1	
1	69059338	A30424D-01100	Main wiring harness	1	
2	69047052	A30424XC-01101	Chip fuse holder	1	
3	69000484	22150010000	10A Fuse	1	
4	69045731	LS45731	Nylon cable ties	按需 On	
5	69041292	U3042401500	Grounding wire	1	
6	69000189	GB/T5783-M6*12-8.8J	Bolt M6*12	1	
7	69000083	GB/T96.1-6	Washer 6	1	
8	69000060	GB/T93-6	Washer 6	1	
9	69037965	A30424-09100	Electric box	1	
10	69000102	GB/T818-M6*12-4.8J	Bolt M6*12	4	
11	69023599	30324M-01105A	Battery cable(+)	1	
12	69039580	30324D-01002L	Fuse	1	
13	69065975	A30424-01700A	Battery cable(-)	1	
14	69039751	GB/T819.1-M8*12-8.8J	Bolt M8*12	1	
15	69000259	GB/T97.1-8	Washer 8	1	
16	69000062	GB/T93-8	Washer 8	1	
17	69019048	30324-03000	Front light wiring harness(left)	1	
18	69021907	30324-04000	Front light wiring harness(right)	1	
19	69036775	A30424-01500	Rear light wiring harness	1	

图18/FIG18. 电气系统 / ELECTRIC SYSTEM

FD20/25/30/35T-AGK5；FD20/25/30/35T-AG（2）5；FD20/25/30/35T-AG（2）3

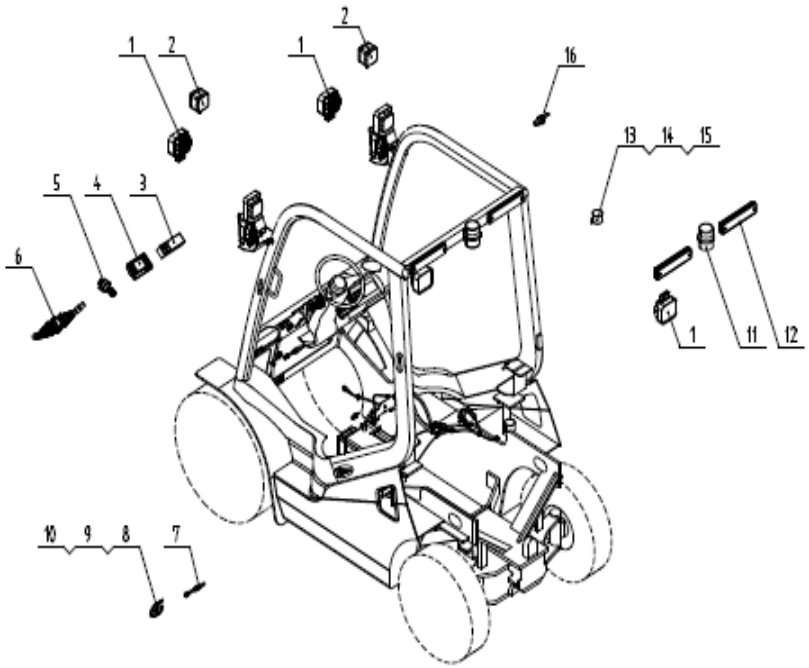

序号 Item No.		代号 Part No.	名称 Description	数量 Q' ty	备注 Remark
1	69044061	A30424-02103	Head light	3	
2	69044060	A30424-02104	Front combination lamp	2	
3	69039792	A30424-02200	Control switch ass'y	1	
4	69052682	A30424XC-02400	Display	1	
5	69037964	A30424-02202	Key switch	1	
6	69021669	30424-00016	Combination switch	1	
7	69044167	A30424-02201	Brake lamp switch	1	
8	69006074	A25724-02005	Horn	1	
9	69039751	GB/T819.1-M8*12-8.8J	Bolt M8*12	1	
10	69000062	GB/T93-8	Washer 8	1	
11	69009359	A25724-02004	Caution light	1	
12	69037956	A30424-02102	Rear combination lamp	2	
13	69000379	A25724-02006	Buzzer	1	
14	69000190	GB/T5783-M6*16-8.8J	Bolt M6*16	1	
15	69000060	GB/T93-6	Washer 6	1	
16	69010422	60424C-00038	Oil temperature sensor	1	

图19/FIG19. 电气系统 / ELECTRIC SYSTEM

FD20/25/30/35T-AG(1)5；FD20/25/30/35T-AG(1)3

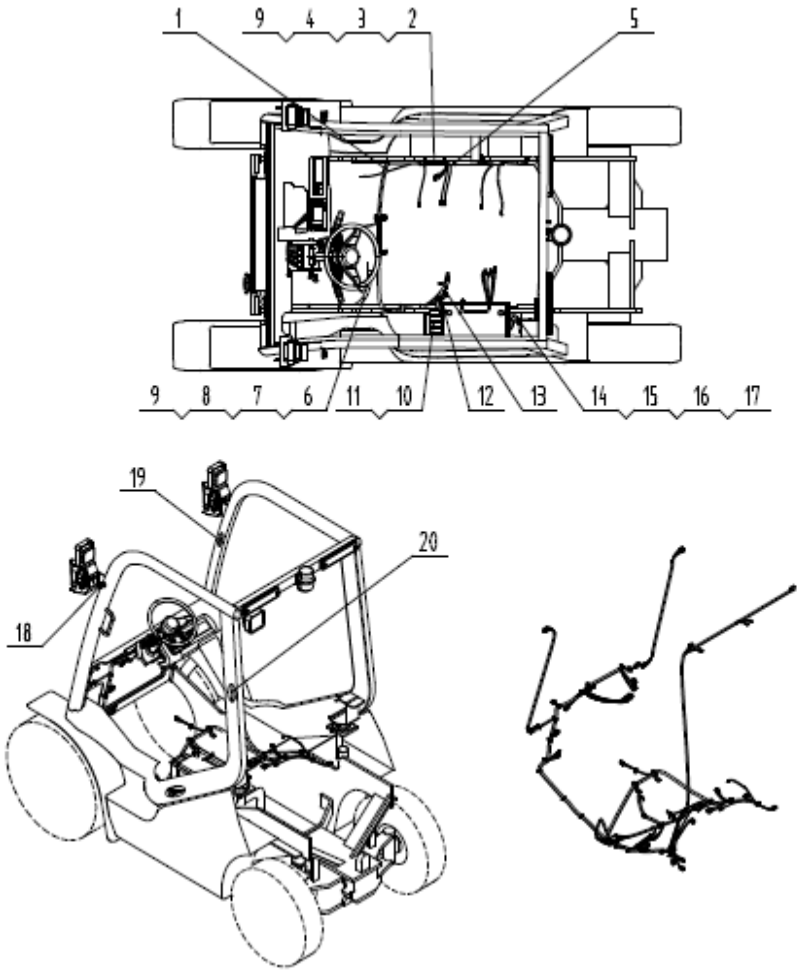

序号 Item No.		代号 Part No.	名称 Description	数量 Q' ty	备注 Remark
A	69077877	A30424XC-00000(III)-1	Electric system	1	
1	69077874	A30424XC-01100(III)	Main wiring harness	1	
2		XC490(III)-1	Electronic Control Unit	1	
3	69011770	GB/T5782-M6*35-8.8J	Bolt M6*35	4	
4	69000258	GB/T97.1-6	Washer 6	4	
5	69045731	LS45731	Nylon cable ties	按需 On	
6	69041292	U3042401500	Grounding wire	1	
7	69000189	GB/T5783-M6*12-8.8J	Bolt M6*12	1	
8	69000083	GB/T96.1-6	Washer 6	1	
9	69000060	GB/T93-6	Washer 6	5	
10	69037965	A30424-09100	Electric box	1	
11	69000102	GB/T818-M6*12-4.8J	Bolt M6*12	4	
12	69023599	30324M-01105A	Battery cable(+)	1	
13	69039580	30324D-01002L	Fuse	1	
14	69065975	A30424-01700A	Battery cable(-)	1	
15	69039751	GB/T819.1-M8*12-8.8J	Bolt M8*12	1	
16	69000259	GB/T97.1-8	Washer 8	1	
17	69000062	GB/T93-8	Washer 8	1	
18	69019048	30324-03000	Front light wiring harness(left)	1	
19	69021907	30324-04000	Front light wiring harness(right)	1	
20	69036775	A30424-01500	Rear light wiring harness	1	

图20/FIG20. 电气系统 / ELECTRIC SYSTEM

FD20/25/30/35T-AG(1)5；FD20/25/30/35T-AG(1)3

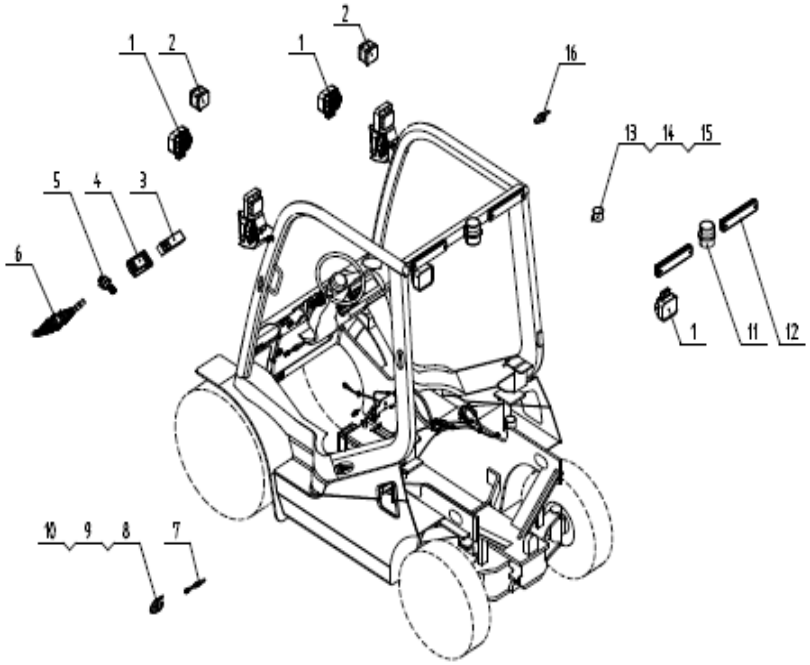

序号 Item No.		代号 Part No.	名称 Description	数量 Q' ty	备注 Remark
1	69044061	A30424-02103	Head light	3	
2	69044060	A30424-02104	Front combination lamp	2	
3	69039792	A30424-02200	Control switch	1	
4	69078314	A30424XC-02400(III)	Display	1	
5	69037964	A30424-02202	Key switch	1	
6	69021669	30424-00016	Combination switch	1	
7	69044167	A30424-02201	Brake switch	1	
8	69006074	A25724-02005	Horn	1	
9	69039751	GB/T819.1-M8*12-8.8J	Bolt M8*12	1	
10	69000062	GB/T93-8	Washer 8	1	
11	69009359	A25724-02004	Caution light	1	
12	69037956	A30424-02102	Rear combination lamp	2	
13	69000379	A25724-02006	Buzzer	1	
14	69000190	GB/T5783-M6*16-8.8J	Bolt M6*16	1	
15	69000060	GB/T93-6	Washer 6	1	
16	69001956	U3042402004	Oil temperature sensor	1	

图21/FIG21. 电气系统 / ELECTRIC SYSTEM

FGL20/25/30/35T-AWG3

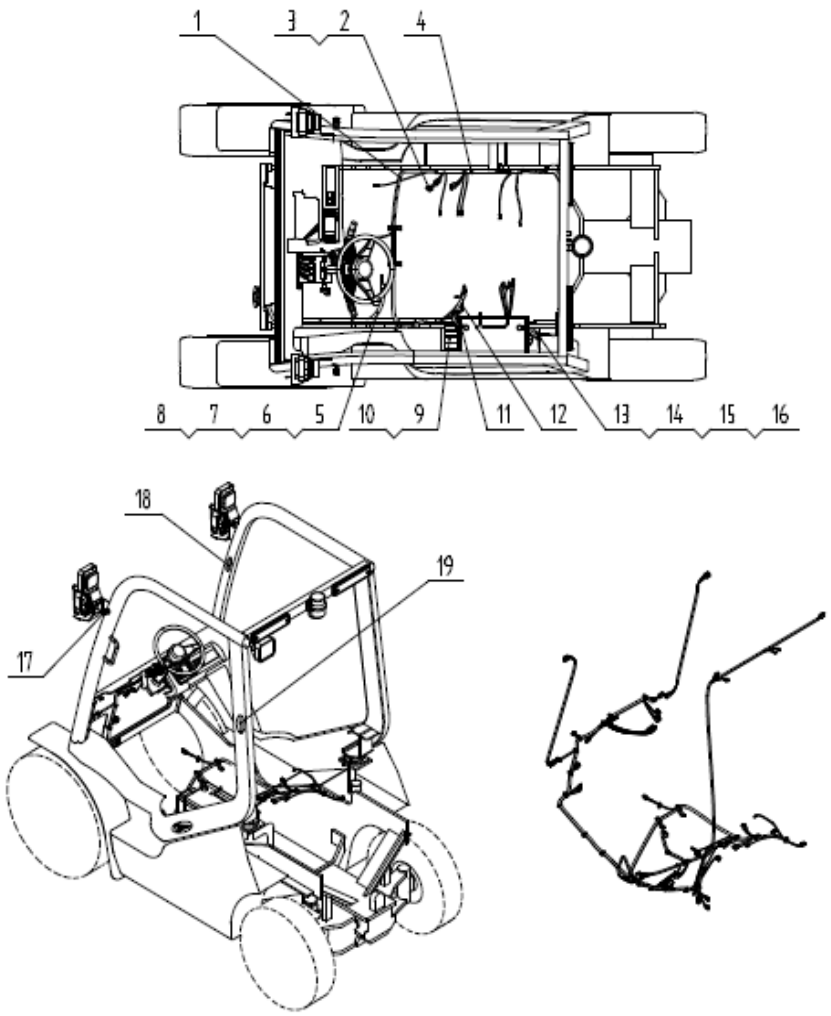

序号 Item No.		代号 Part No.	名称 Description	数量 Q' ty	备注 Remark
A	69063756	A30624SY00000-1	Electric system	1	
1	69063749	A30624SY01100	Main wiring harness	1	
2	69045336	30424L-01001	Fuse	1	
3	69045731	LS45731	Nylon cable ties	按需 On	
4	69001847	U30424LS02002	Water temperature sensor WG430	1	
5	69041292	U3042401500	Grounding wire	1	
6	69000189	GB/T5783-M6*12-8.8J	Bolt M6*12	1	
7	69000083	GB/T96.1-6	Washer 6	1	
8	69000060	GB/T93-6	Washer 6	1	
9	69080540	A30424-00001	brake short circuit wirin	1	
10	69037965	A30424-09100	Electric box	1	
11	69000102	GB/T818-M6*12-4.8J	Bolt M6*12	4	
12	69065973	A30424-01600A	Battery cable(+)	1	
13	69065975	A30424-01700A	Battery cable(-)	1	
14	69039751	GB/T819.1-M8*12-8.8J	Bolt M8*12	1	
15	69000259	GB/T97.1-8	Washer 8	1	
16	69000062	GB/T93-8	Washer 8	1	
17	69021907	30324-04000	Front light wiring harness(right)	1	
18	69019048	30324-03000	Front light wiring harness(left)	1	
19	69036775	A30424-01500	Rear light wiring harness	1	
20					
21					
22					
23					
24					

图22/FIG22. 电气系统 / ELECTRIC SYSTEM

FGL20/25/30/35T-AWG3

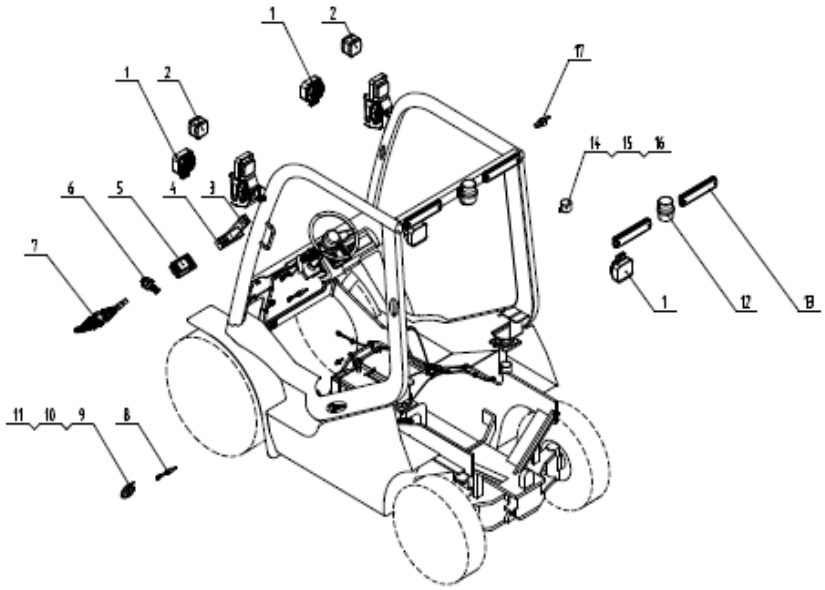

序号 Item No.		代号 Part No.	名称 Description	数量 Q' ty	备注 Remark
1	69044061	A30424-02103	Head light	3	
2	69044060	A30424-02104	Front combination lamp	2	
3	69037964	A30424-02202	Fuel selection switch	1	
4	69039792	A30424-02200	Control switch ass'y	1	
5	69078314	A30424XC-02400(III)	Display	1	
6	69037964	A30424-02202	Key switch	1	
7	69021669	30424-00016	Combination switch	1	
8	69044167	A30424-02201	Brake switch	1	
9	69006074	A25724-02005	Horn	1	
10	69039751	GB/T819.1-M8*12-8.8J	Bolt M8*12	1	
11	69000062	GB/T93-8	Washer 8	1	
12	69009359	A25724-02004	Caution light	1	
13	69037956	A30424-02102	Rear combination lamp	2	
14	69000379	A25724-02006	Buzzer	1	
15	69000190	GB/T5783-M6*16-8.8J	Bolt M6*16	1	
16	69000060	GB/T93-6	Washer 6	1	
17	69001956	U3042402004	Oil temperature sensor	1	

图23/FIG23. 电气系统 / ELECTRIC SYSTEM

FGL20/25/30/35T-AWG3；FD20/25/30/35T-AG(1)5；FD20/25/30/35T-AG(1)3；FD20/25/30/35T-AGK5；FG(L)20/25/30/35T-AWA5；FG(L)20/25/30/35T-AWA3；FD20/25/30/35T-AWE5

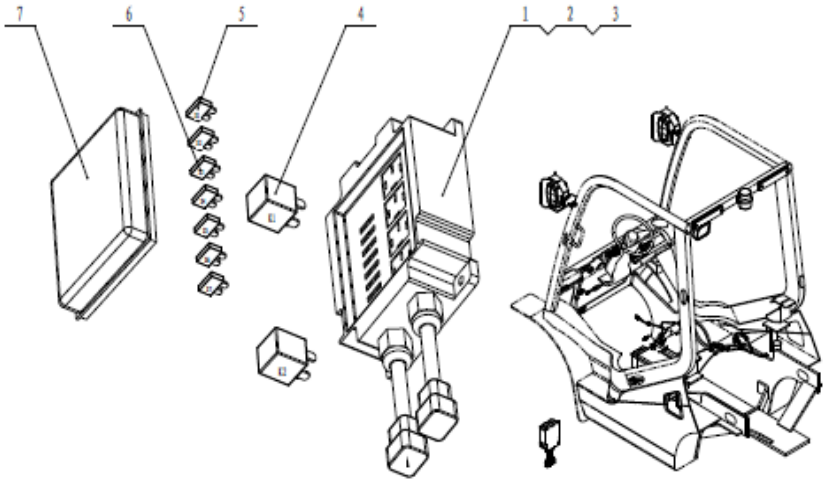

序号 Item No.		代号 Part No.	名称 Description	数量 Q' ty	备注 Remark
1	69037965	A30424-09100	Electric box seat	1	
-	69077872	A30424-09100(III)	Electric box	1	XINCHAI（CHINA III）
2	69000102	GB/T818-M6*12-4.8J	Bolt M6*12	4	
3	69000060	GB/T93-6	Washer 6	4	
4		A30424-09101	Relay JQ101U-AED	2	
5	69010415	22150020000	15A fuse	4	
6	69000484	22150010000	10A fuse	3	
7	/	A30424-09200	Transparent cover	1	NSS

图24/Fig24. 传动装置安装(液力式1/2)/TRANSMISSION SYSTEM MOUNT(TOR-CON TYPE1/2)

FG(L)20/25/30/35T-AWA3、FD20/25/30/35T-AWK3

FD20/25/30/35T-AG(1)3、FD20/25/30/35T-AWV3

FGL20/25/30/35T-AWG3

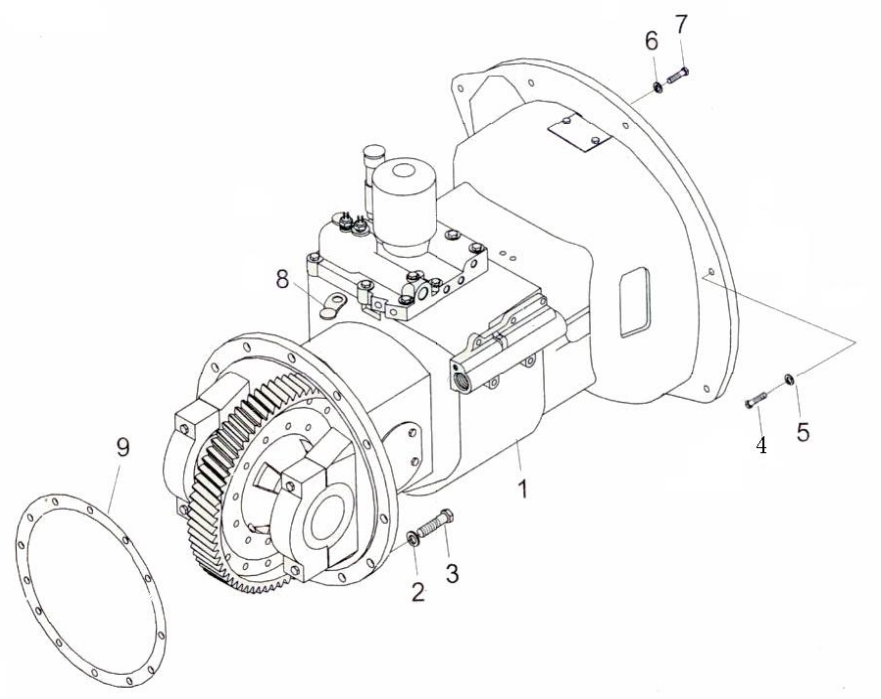

序号 Item No.		代号 Part No.	名称 Description	数量 Q'ty	备注 Remark
1	69009711	M30216N01000	Transmission(Electro-hydraulic)	1	NISSAN K25
-	69003210	M30416A01000	Transmission(Electro-hydraulic)	1	XINCHAI、MITSUBISHI S4S、DACHAI
	69004465	M30416I01000	Transmission(Electro-hydraulic)	1	AEROSPACE MITSUBISHI 4G64
02	69000054	GB/T93-12	Washer 12	12	
03	69000139	GB/T5786-M12*1.25*40-8.8I	Bolt M12×1.25×40	12	
04	69000198	GB/T5783-M8*20-8.8J	Bolt M8×20	12	
05	69000062	GB/T93-8	Washer 8	12	
06	69000053	GB/T93-10	Washer 10	9	
07	69000117	GB/T5786-M10*1.25*35-8.8I	Bolt M10×1.25×35	7	NISSAN K25、MITSUBISHI
-	69000130	GB/T5783-M10*35-8.8J	Bolt M10×35	9	XINCHAI、MITSUBISHI S4S、DACHAI
08	69071110	M3031600000-1	Clip	1	
09	69000538	M3031600001	Gear box gasket	1	2-3.5t

图24/Fig24. 传动装置安装(液力式2/2)/TRANSMISSION SYSTEM MOUNT(TOR-CON TYPE2/2)

FG(L)20/25/30/35T-AWA3、FD20/25/30/35T-AWK3

FD20/25/30/35T-AG(1)3、FD20/25/30/35T-AWV3

FGL20/25/30/35T-AWG3

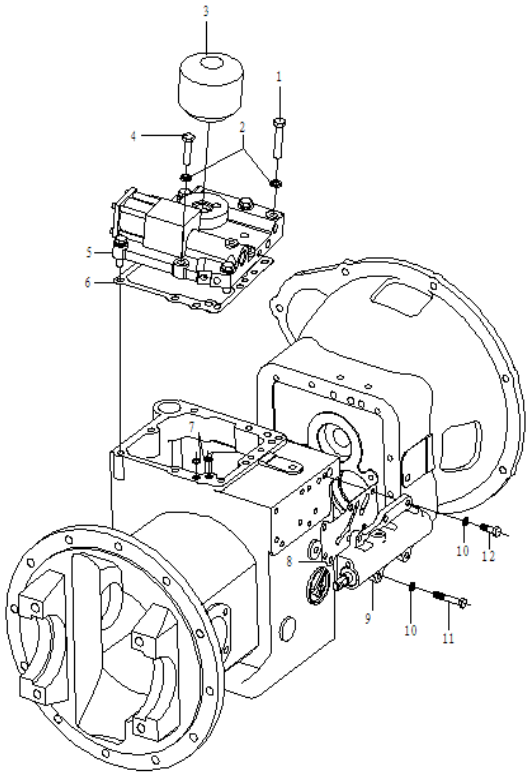

序号		代号	名称	数量	备注
Item No.		Part No.	n	Q’ty	Remark
1	69135122	GB/T5783-2000-M10*55	Bolt M10×55 grading 10.9	2	
2	69000053	GB/T93-10	Washer 10	8	
3	69135101	YBS5.904	Filter	1	
4	69135102	GB/T5783-2000-M10*40-10.9I	Bolt M10×40 grading 10.9	1	
5	69055820	DCCT5	Electro-hydraulic control	1	YQXD30系列
		YDS30.907	Cap & Control valve ass’y	1	YQX30系列
	69136240	JK208	Reversing switch	2	YQX30系列
6	69135104	YDS30.067	Washer	1	
7	69135105	11×1.9 GB1235-76	O-ring 11×1.9	2	
8	69018610	YDS30.047	Washer	1	
9	69135106	YDS30.910S	Inching valve	1	
10	69000062	GB/T93-8	Washer 8	5	
11	69135108	GB/T5783-2000-M8*50-10.9I	Bolt M8×50 grading 10.9	2	
12	69135109	GB/T5783-2000-M8*25-10.9I	Bolt M8×25 grading 10.9	3	

图25/Fig25. 传动装置安装(液力式)/TRANSMISSION SYSTEM MOUNT(TOR-CON TYPE)

FD20/25/30/35T-AWE5、FD20/25/30/35T-AWK5

FD20/25/30/35T-AWV5

FG(L)20/25/30/35T-AWA5

FD20/25/30/35T-AG(1)5

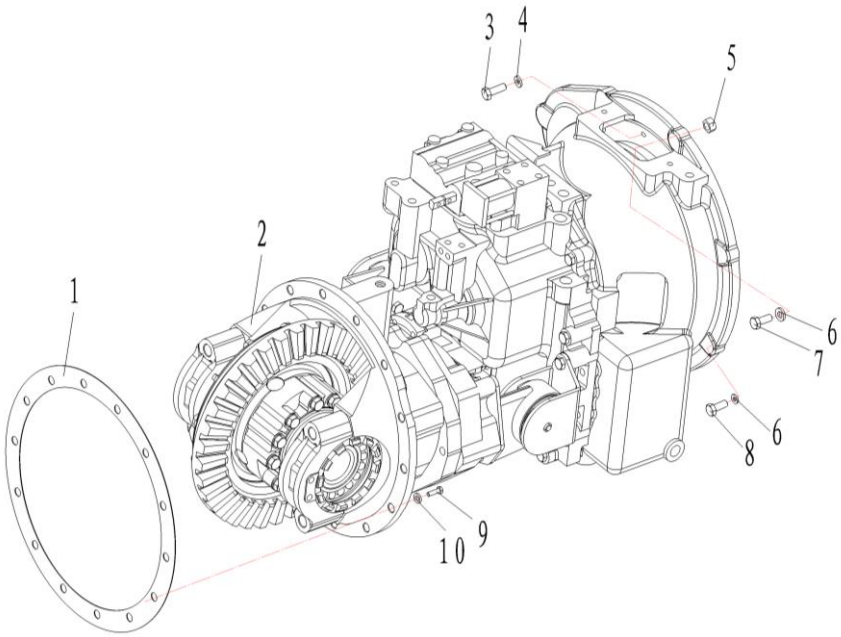

序号 Item No.		代号 Part No.	名称 Description	数量 Q'ty	备注 Remark
01	69034305	A30416-00001	Gasket	1	
02	69049290	A30416-02000	Transmission ass'y (FYQXD30M、FCSQD30)	1	NISSAN K25、MITSUBISHI
-	69046988	A30416XC-05000	Transmission ass'y(FYQXD30ⅡA、FCSQD30)	1	XINCHAI、DACHAI
03	69000198	GB/T5783-M8*20-8.8J	Bolt M8×20	8	
04	69000062	GB/T93-8	Washer 8	8	
05	69000103	GB/T6170-M10-8J	Nut M10	1	YANMAR98
-	69000103	GB/T6170-M10-8J	Nut M10	6	NISSAN K25
06	69000053	GB/T93-10	Washer 10	8	
07	69017603	GB/T5782-M10*45-8.8J	Bolt M10×45	1	YANMAR98
-	69017603	GB/T5782-M10*45-8.8J	Bolt M10×45	6	NISSAN K25
-	69000130	GB/T5783-M10*35-8.8J	Bolt M10×35	9	XINCHAI、DACHAI
08	69000117	GB/T5786-M10*1.25*35-8.8J	Bolt M10×1.25×35	7	YANMAR98
-	69000117	GB/T5786-M10*1.25*35-8.8J	Bolt M10×1.25×35	2	NISSAN K25
-	69000117	GB/T5786-M10*1.25*35-8.8J	Bolt M10×1.25×35	8	MITSUBISHI S4S
09	69039607	GB/T5785-M12*1.25*35-8.8J	Bolt M12×1.25×35	14	
10	69000054	GB/T93-12	Washer 12	14	

图26/Fig26. 传动装置安装(液力式1/2)/TRANSMISSION SYSTEM MOUNT(TOR-CON TYPE1/2)

FG(L)20/25/30/35T-AWA3

FD20/25/30/35T-AG(1)3、FD20/25/30/35T-AWV3

FGL20/25/30/35T-AWG3

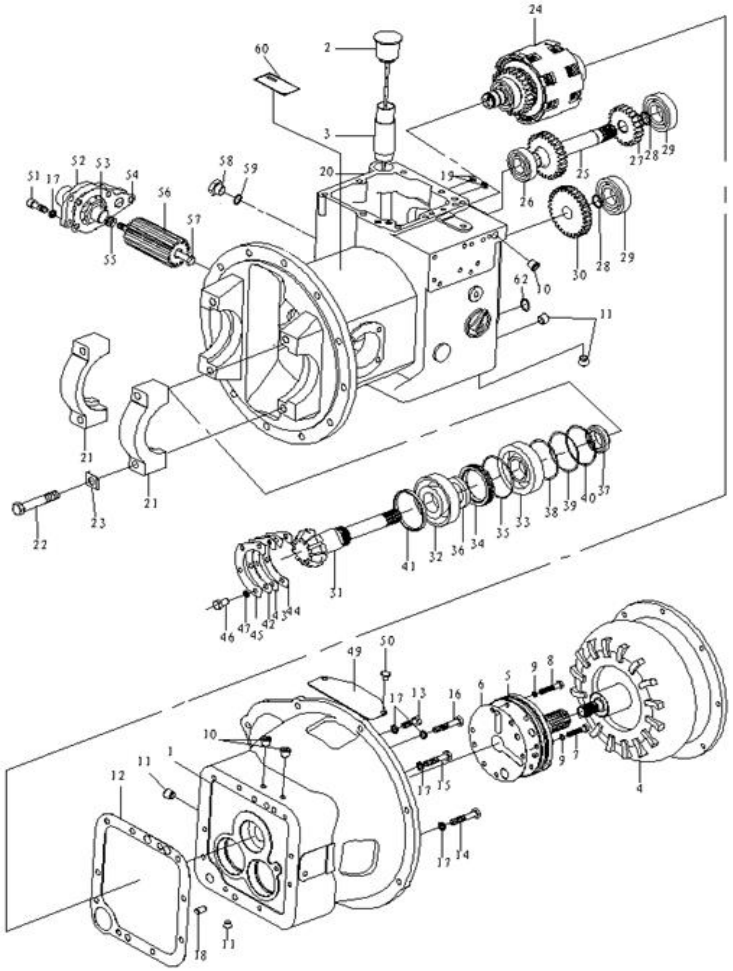

序号 Item No.		代号 Part No.	名称 Description	数量 Q' ty	备注 Remark
1	69059060	YDS30.804	Tor-con housing	1	YQX(D)30(MKS); YQX(D)30H
-	69135110	YDS30A.801	Tor-con housing	1	YQX(D)30A
2	69038509	YDS30.909	Oiling Cap	1	
3	69135111	YDS30.049	Oiling pipe	1	
4	69007147	YJH265	Hyraulic torque converter	1	YQX(D)30(MKS)
	69135112	YJH265A	Hydraulic torque converter	1	YQX(D)30H
	69135113	YJH265D	Hydraulic torque converter	1	YQX(D)30A
5	69006638	YDS30.906	Oil pump ass'y	1	
6	69135114	YDS30.100	Washer	1	
7	69135115	GB/T5789-1986-M8*50-10.9T	Bolt M8×50 grading 10.9	4	
8	69135116	GB/T5789-1986-M8*40-10.9T	Bolt M8×40 grading 10.9	2	
9	69135117	YDS30.144	Combination gasket 18	6	
10	69135156	YDS30.103	Screw plug	3	
11	69093815	YDS30.104	Screw plug	4	
12	69135119	YDS30.038	Washer	1	
13	69135120	GB/T5783-2000-M10*30	Bolt M10X30	12	
14	69135121	GB/T5783-2000-M10*50	Bolt M10X50	1	
15	69135122	GB/T5783-2000-M10*55	Bolt M10X55	6	
16		YDS30.165	Bolt	1	
17	69000053	GB/T93-10	Washer 10	25	
18	69135125	GB/T119.1-2000-12		2	
19	69135126	15×2.4 GB1235-76		2	
20	69059060	YDS30.804	Housing	1	
21	69136245	YDS30.072	Bearing seat	2	
22		YDS30.089	Bolt	4	

图26/Fig26. 传动装置安装(液力式1/2)/TRANSMISSION SYSTEM MOUNT(TOR-CON TYPE1/2)

FG(L)20/25/30/35T-AWA3

FD20/25/30/35T-AG(1)3、FD20/25/30/35T-AWV3

FGL20/25/30/35T-AWG3

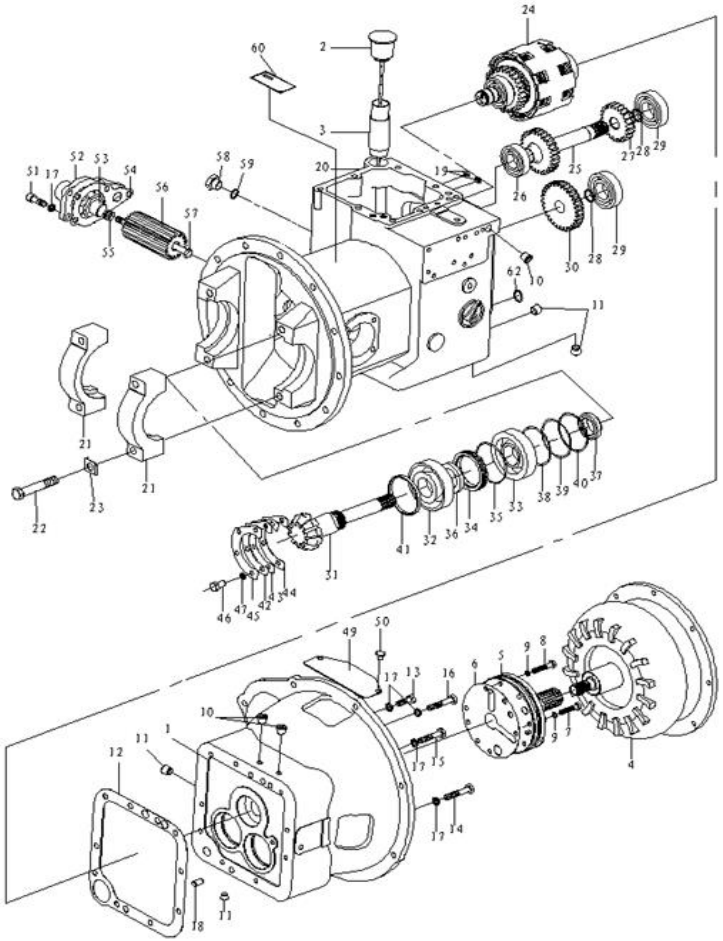

序号 Item No.		代号 Part No.	名称 Description	数量 Q'ty	备注 Remark
23		YDS30.082	Lock plate	4	
24	69135130	YDS30.901S	Clutch ass'y	1	
25	69135131	YDS30.025	Shaft,idler	1	
26	69135132	6206 GB/T276-1994	Deep groove ball bearing 6206	1	
27	69094470	YDS30.037	Gear.idler	1	
28	69135133	GB/T893.1-1986-24	Orifice circlip 24	2	
29	69135134	6207 GB/T276-1994	Deep groove ball bearing 6207	2	
30	69135136	YDS30DY.002	Gear,output	1	
31		YDS25.017	Shaft,output	1	
32	69135137	32208 GB/T 297-1994	Tapered roller bearing 32208	1	
33	69135138	30208 GB/T 297-1994	Tapered roller bearing 30208	1	
34	69135139	YDS30.023	Oil seal retainer	1	
35	69135140	80×3.1 GB1235-76	O-ring 80x3.1	1	
36	69135141	12163-82131	Oil seal	1	
37	69093810	YDS30.024	Nut	1	
38	69135142	YDS30.019（δ=0.1）	Washer	3	
39	69135143	YDS30.019（δ=0.2）	Washer	按需 On	
40	69135144	YDS30.019（δ=0.5）	Washer	3	
41	69135145	YDS30.020	Shaft collar	1	
42	69135146	YDS30.022（δ=0.1）	Washer	3	
43	69135147	YDS30.022（δ=0.2）	Washer	按需 On	
44	69135148	YDS30.022（δ=0.5）	Washer	3	
45	69080362	YDS30.021	Bearing support plate	1	
46	69135149	GB/T5783-2000-M8*20	Bolt M8x20	4	

图26/Fig26. 传动装置安装(液力式1/2)/TRANSMISSION SYSTEM MOUNT(TOR-CON TYPE1/2)

FG(L)20/25/30/35T-AWA3

FD20/25/30/35T-AG(1)3、FD20/25/30/35T-AWV3

FGL20/25/30/35T-AWG3

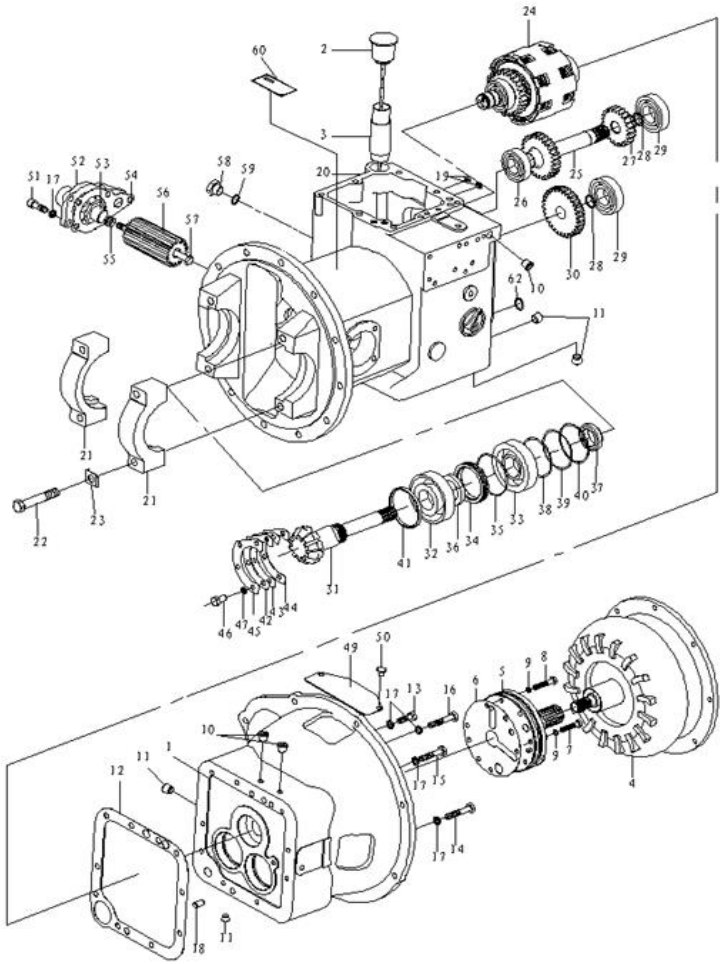

序号 Item No.		代号 Part No.	名称 Description	数量 Q' ty	备注 Remark
47	69000062	GB/T93-8	Spring washer 8	4	
48	69032087	GB/T5786-M10*1.25*20-8.8I	Bolt M10×1.25×20	6	
49	69135151	FYQX30.056	Cap	1	
50	69135152	GB/T818-2000-M8*10	Screw M8x10	2	
51	69135153	GB/T70.1-2000-M10*30	Screw M10x30	5	
52	69135154	YDS30.133	Oil filter seat	1	
53		YDS30.155	Oil filter seat	1	
54	69135129	YDS30.134	Paper pad	1	
55		GB/T6181-1986-M12	Nut M12	1	
56	69088714	YDS30.814	Strainer net ass 'y	1	
57		YDS30.135	Screw rod	1	
58	69088744	YBS5.133	Screw plug	1	
59	69138571	JB982-77-18	Combination gasket 18	1	
60	69135128	YDS30.069	Label	1	
62	69135118	GB1235-76	O-ring 24×2.4	1	

图26/Fig26. 传动装置安装(液力式2/2)/TRANSMISSION SYSTEM MOUNT(TOR-CON TYPE2/2)

FG(L)20/25/30/35T-AWA3

FD20/25/30/35T-AG(1)3、FD20/25/30/35T-AWV3

FGL20/25/30/35T-AWG3

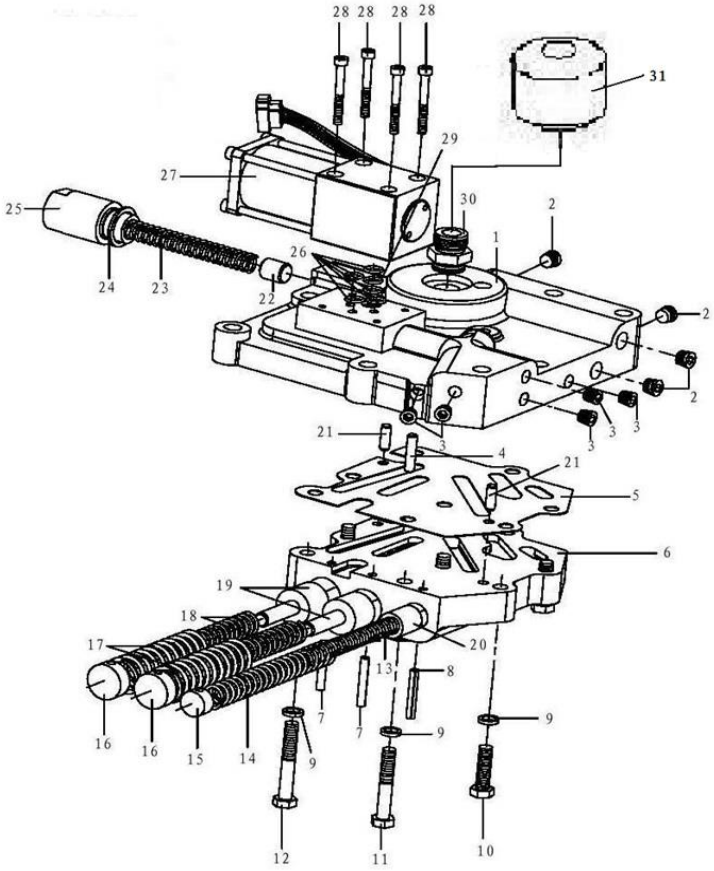

序号		代号	名称	数量	备注
Item No.		Part No.	Description	Q' ty	Remark
A	69055820	DCCT5	Electrohydraulic control valve	1	
B		DCCT5S	Electrohydraulic control valve	1	
1	69135155	11243－83272	Housing cover	1	
2	69135156	YDS30.103	Screw plug	4	
3	69106341	YDS30.102	Screw plug	5	
4	69135157	GB/T 119.1-2000-6*28	Cylindrical Pin 6（h8）×28	1	
5	69082987	116H3-82361a	Paper pad	1	
6	69135158	15583－83362	Valve body	1	
7	69135159	GB/T879.1-2000-5*40	Elastic cylindrical pin 5×40	2	
8	69135160	GB/T879.1-2000-5*35	Elastic cylindrical pin 5×35	1	
9	69000062	GB/T93-8	Spring Washer	8	
10	69135161	GB/T5783-2000-M8*30-10.9T	Bolt M8×30 grading 10.9	2	
11	69135108	GB/T5783-2000-M8*50-10.9T	Bolt M8×50 grading 10.9	3	
12	69135162	GB/T5783-2000-M8*55-10.9T	Bolt M8×55 grading 10.9	3	
13	69135163	YDS30.059	Spring	19	
14	69135164	15583-82411a	Spring	1	
15	69107618	YDS30.060	Plug	1	
16	69107621	YDS30.064	Plug	2	
17	69135165	YDS30.062	Spring	2	
18	69135166	YDS30.063	Spring	2	
19	69117772	YDS30.061	Valve core	2	
20	69107615	YDS30.057	Piston	1	
21	69135167	GB/T119.1-2000-6*18	Cylindrical pin 6（h8）×18	2	
22	69107612	YDS30.052	Piston	1	
23	69135168	YDS30.050	Spring	1	

图26/Fig26. (DCCT5)DCCT5S电液控制阀/(DTCCT5)DCCT5S CONTROL VALVE(ELECTRO-HYDRAULIC)

FD25/30T-M3G(1)2,M3G(1)3 ; FD25/30/35T-M3G(5)2,M3G(5)3

FD25/30/35T-M3(16)2,M3G(16)3; FD25/30/35/40T-M3G(2)3

FD30/35/40T-M3G(9)2,M3G(9)3; FD25/30(T)-M3G(8)2/M3G(8)3

FD25/30/35T-M3WB3; FG（L）25/30/35T-M2WA2/M2WA3

FD25T-M3WE3; FD30/35T-M3WE2,M3WE3; FD40T-M3WE3

FD25/30/40T-M3WV3; FGL25/30/35T-M3WG3

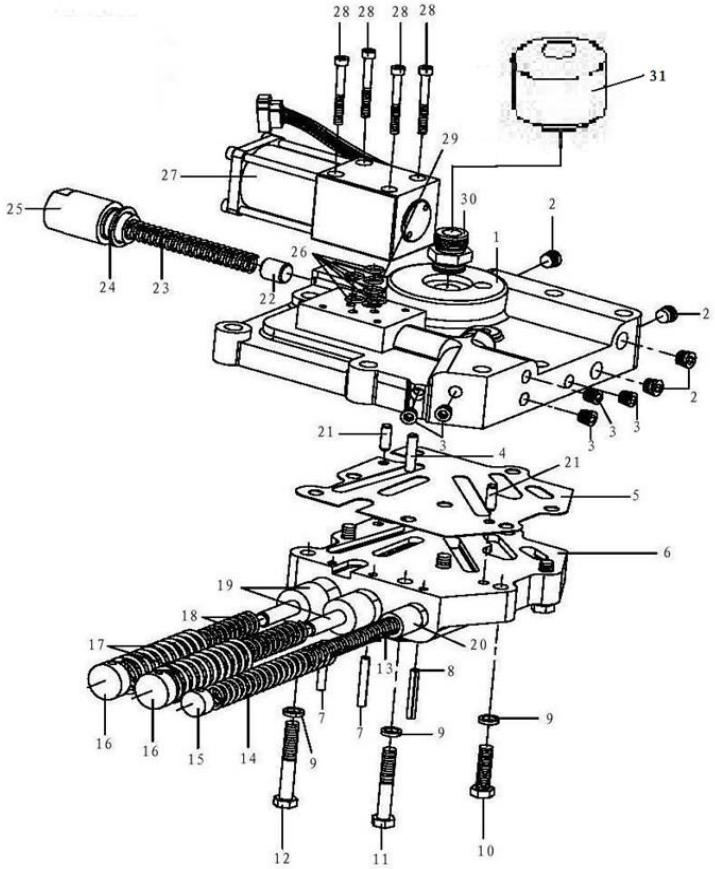

序号		代号	名称	数量	备注
Item No.		Part No.	Description	Q' ty	Remark
24	69005519	LS5519	Combination gasket 20	1	
25	69090000	YDS30.051	Safety valve cap	1	
26	69018272	GB/T3452.1-9*1.8	O-ring 9.00×1.80 G	5	
27	69135170	34E-10BY	Solenoid directional valve	1	
28	69135171	GB/T70.1-2000-M5*45	Hexagon socket headed screw M5×45	4	
29	69080047	13983-82161	Filter net	1	
30	69058940	YDS30.048	Connector	1	
31	69135101	YBS5.904	Filter	1	仅DDCT5S有此项

图27/Fig27. 传动装置安装(液力式)/TRANSMISSION SYSTEM MOUNT(TOR-CON TYPE)

FD20/25/30/35T-AWE5

FD20/25/30/35T-AWV5

FG(L)20/25/30/35T-AWA5

FD20/25/30/35T-AG(1)5

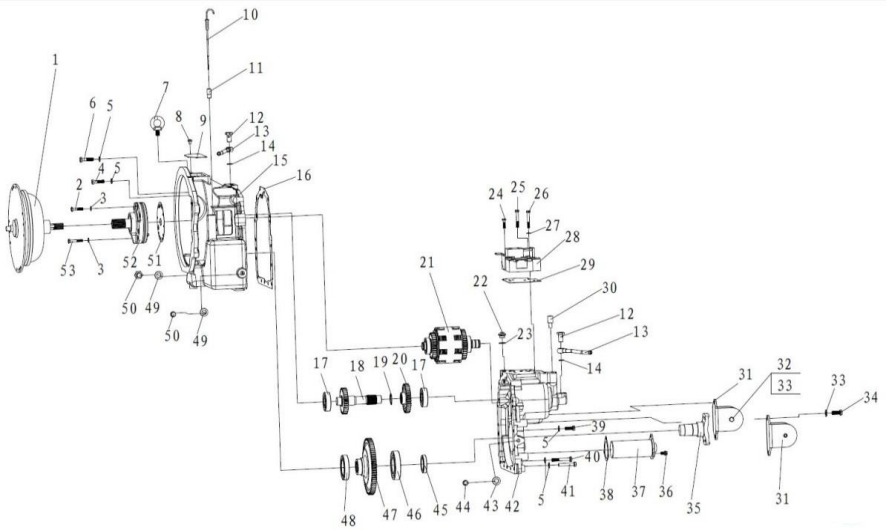

序号 Item No.		代号 Part No.	名称 Description	数量 Q' ty	备注 Remark
01	69083466	YJH265-10D	Hyraulic torque converter	1	
02	69135116	GB/T5789-1986-M8*40-10.9I	Bolt M8×40	3	
03	69135117	YDS30.144	Combination gasket18	6	
04		GB/T5783-M10*80	Bolt M10×80	1	
05	69000053	GB/T93-10	Washer10	15	
06		GB/T5783-M10*80	Bolt M10×80	1	
07	69095736	GB/T825-M12	Ring screw M12	2	
08	69135152	GB/T818-2000-M8*10	Screw M8×10	2	
09		YDS30.112	Cover plate	1	
10	69059505	FYQX30.803	Dipstick ass'y	1	
11	69059507	YBS3.071	Dipstick seat	1	
12		YBS3.075	Hinge bolt	2	
13	69090921	YBS3.809	Hose	2	
14	69143423	Q/301B202-16*20*1	Seal ring16×20×1	4	
15	69059653	FYQX30.802	Tor-con housing ass'y	1	
16	69070420	FYQX30.010	Paper pad	1	
17	69039054	6306 GB/T276-94	Deep groove ball bearing 6306	2	
18	69088550	FYQX30.007	Idler gear shaft	1	
19	69005095	GB/T894.1-Φ35	Axial circlip 35	1	
20	69088551	L91324-05800	Driven gear	1	
21	69052512	FYQX30.901	Hydraulic clutch ass'y	1	
22		YBS5.067	Screw plug	1	
23	69143425	Q/301B202-20*25*1	Seal ring 20×25×1	1	
24		GB/T5789-M8*30	Bolt M8×30	2	
25		GB/T5789-M8*60	Bolt M8×60	4	

图27/Fig27. 传动装置安装(液力式)/TRANSMISSION SYSTEM MOUNT(TOR-CON TYPE)

FD20/25/30/35T-AWE5

FD20/25/30/35T-AWV5

FG(L)20/25/30/35T-AWA5

FD20/25/30/35T-AG(1)5

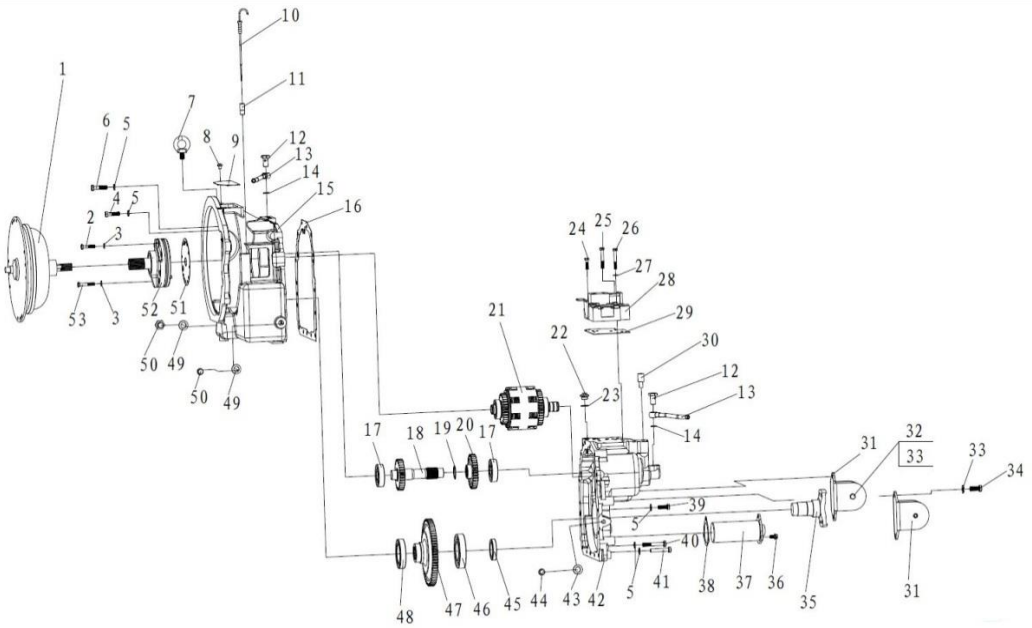

序号 Item No.		代号 Part No.	名称 Description	数量 Q' ty	备注 Remark
26	69021662	GB/T5782-M8*60-8.8J	Bolt M8×60	2	
27	69000062	GB/T93-8	Washer 8	2	
28	69052513	FYQX30.908	Control valve(tor-con type)	1	
29	69083046	FYQX30.062	Gasket	1	
30		YBS3.805	Breathable connector cover ass'y	1	
-		FYQX30.064	Breathable connector	1	
-	69000359	JB/T982-24	Combination gasket 24	1	
31		FYQX30.805	Bracket	2	
32		GB/T5786-M12*1.25*90	Bolt M12×1.25×90	2	
33	69000054	GB/T93-12	Washer 12	6	
34	69000213	GB/T5786-M12*1.25*30-8.8J	Bolt M12×1.25×30	4	
35	69088367	FYQX30.017	Output flange	1	
36		GB/T5789-M8*16	Bolt M8×16	3	
37	69052514	FYQX30.804	Oil filter ass'y	1	
38	69065526	FYQX30.015	Filter paper pad	1	
39	69000128	GB/T5783-M10*30-8.8J	Bolt M10×30	5	
40		GB/T5782-M10*75	Bolt M10×75	3	
41	69017797	GB/T5782-M10*60-8.8J	Bolt M10×60	5	
42		FYQX30.801	Case ass'y	1	
43	69138439	JB982-77-16	Combination gasket16	1	
44		YBQ323B.146	Screw plug	1	
45	69074027	FYQX30.020	Oil seal	1	
46	69016771	GB/T276-6212	Deep groove ball Bearing 6212	1	
47	69088552	L91324-15903	Output gear	1	
48	69138348	GB/T276-6012	Deep groove ball bearing 6012	1	

图27/Fig27. 传动装置安装(液力式)/TRANSMISSION SYSTEM MOUNT(TOR-CON TYPE)

FD20/25/30/35T-AWE5

FD20/25/30/35T-AWV5

FG(L)20/25/30/35T-AWA5

FD20/25/30/35T-AG(1)5

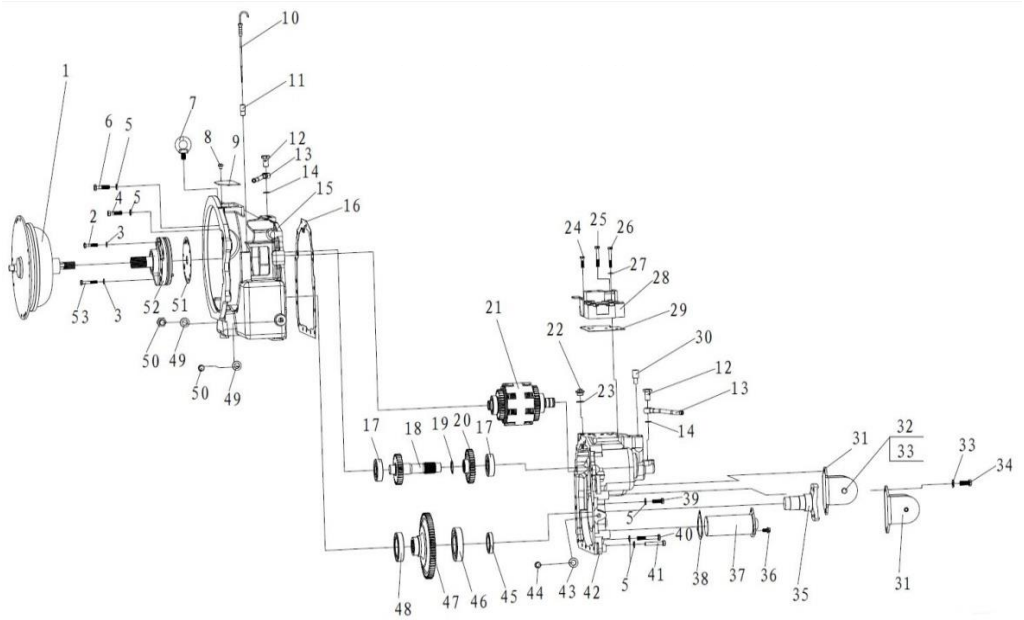

序号 Item No.		代号 Part No.	名称 Description	数量 Q'ty	备注 Remark
49	69138571	JB982-77-18	Combination washer 18	2	
50	69088744	YBS5.133	Screw plug	2	
51		FYQX30.012S	Paper pad,pump	1	
52	69052515	FYQX30.906	Oil pump ass'y	1	
53	69135115	GB/T5789-1986-M8*50-10.9I	Bolt M8×50	3	
54	69058940	YDS30.048	Connector	1	
55	69135101	YBS5.904	Transmission filter	1	

图28/Fig28. 差速器总成/DIFFERENTIAL ASS'Y

FD20/25/30/35T-AWE5

FD20/25/30/35T-AWV5

FG(L)20/25/30/35T-AWA5

FD20/25/30/35T-AG(1)5

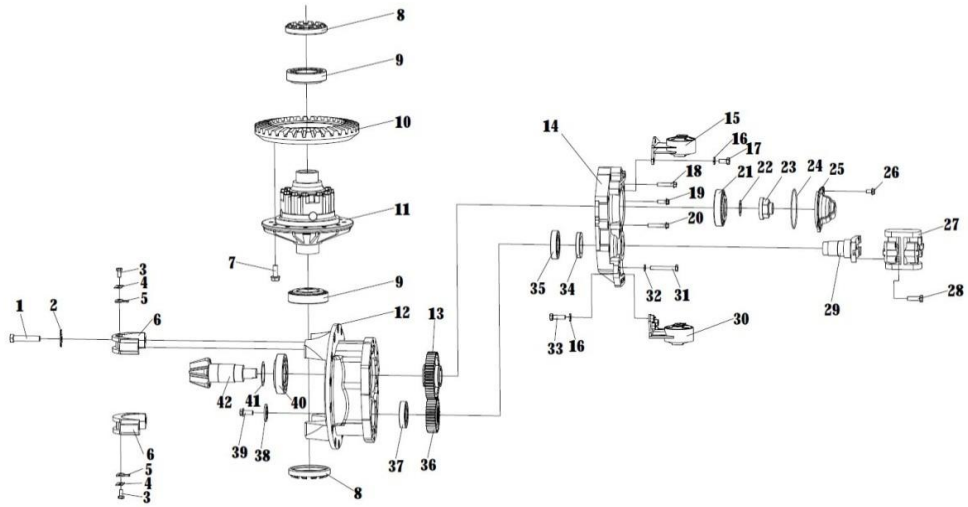

序号 Item No.		代号 Part No.	名称 Description	数量 Q'ty	备注 Remark
01		CSQD30.032	Bolt	4	
02		CSQD30.009	Thrust washer	4	
03	69032087	GB/T5786-M10*1.25*20-8.8I	Bolt M10×1.25×20	4	
04		CSQD30.028	Washer	2	
05		CSQD30.027	Thrust washer	2	
06		CSQD30.022	Bearing cover	2	
07		CSQD30.011	Bolt	12	
08		CSQD30.010	Adjusting nut	2	
09	69069135	32214	Deep groove ball bearing 32214	2	
10	69088555	CSQD30.012	Spiral bevel gear, driven	1	
11		FCSQD30.901	Differential gear ass'y	1	
12	69084712	FCSQD30.006	Differential seat	1	
13	69088554	FCSQD30.002	Driven gear	1	
14		FCSQD30.007	Differential case	1	
15	69076243	FCSQD30.902	Bracket ass'y(left)	1	
16	69000054	GB/T93-12	Washer12	6	
17	69000137	GB/T5786-M12*1.25*25-8.8I	Bolt M12×1.25×25	3	
18		CSQD30.035	Flange bolt	7	
19		CSQD30.036	Flange bolt	2	
20		CSQD30.034	Flange bolt	1	
21		GB/T297-31310	Bearing 31310	1	
22		CSQD30.017	Adjusting shim	4/4	
23		CSQD30.018	Nut	1	
24	69023231	LS23231	O-ring 115×3.1	1	
25		CSQD30.019	Driven shaft cap	1	

图28/Fig28. 差速器总成/DIFFERENTIAL ASS'Y

FD20/25/30/35T-AWE5

FD20/25/30/35T-AWV5

FG(L)20/25/30/35T-AWA5

FD20/25/30/35T-AG(1)5

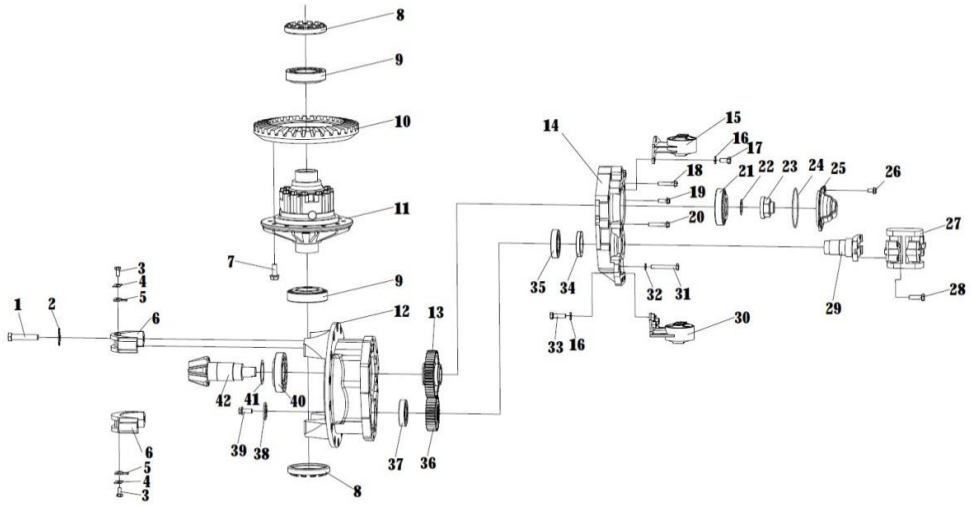

序号 Item No.		代号 Part No.	名称 Description	数量 Q'ty	备注 Remark
26		CSQD30.038	Flange bolt	2	
27	69059061	FCSQD30.904	Coupling ass'y	1	
28	69059062	GB/T5789-1986	Bolt M10×1.25×40	4	
29	69070696	CSQD30.001	Input flange	1	
30	69076244	FCSQD30.903	Bracket ass'y(right)	1	
31	69138315	GB/T5785-M10*1.25*80	Bolt M10×1.25×80	1	
32	69000053	GB/T93-10	Washer 10	1	
33	69000117	GB/T5786-M10*1.25*35-8.8I	Bolt M12×1.25×35	3	
34	69070695	CSQD30.031	Oil seal	1	
35	69005918	GB/T276-6209	Deep groove ball bearing	1	
36	69088553	FCSQD30.001	Driving gear	1	
37	69005920	GB/T276-6208	Deep groove ball bearing	1	
38		CSQD30.003	Clapboard	1	
39		CSQD30.030	Bolt	1	
40	69138338	GB/T297-31311	Tapered roller bearing 31311	1	
41		CSQD30.013	Adjusting shim	3/3	
42	69088555	CSQD30.014	Spiral bevel gear, driving	1	

图29/Fig29. 差速齿轮总成/DIFFERENTIAL GEAR ASS'Y

FD20/25/30/35T-AWE5

FD20/25/30/35T-AWV5

FG(L)20/25/30/35T-AWA5

FD20/25/30/35T-AG(1)5

序号 Item No.		代号 Part No.	名称 Description	数量 Q'ty	备注 Remark
01		CSQD30.020	Differential case(left)	1	
02	69088560	CSQD30.007	Shim	2	
03	69088559	CSQD30.006	Differential gear	2	
04	69088558	CSQD30.004	Shim	4	
05	69088557	CSQD30.005	Planetary gear	4	
06		FCSQD30.003	Differential case(right)	1	
07		CSQD30.033	Bolt	12	
08	69088556	CSQD30.026	Cross shaft	1	

图30/Fig30. 传动装置安装(机械式)/DRIVE UNIT MOUNT(CLUTCH TYPE)

FD20/25/30/35

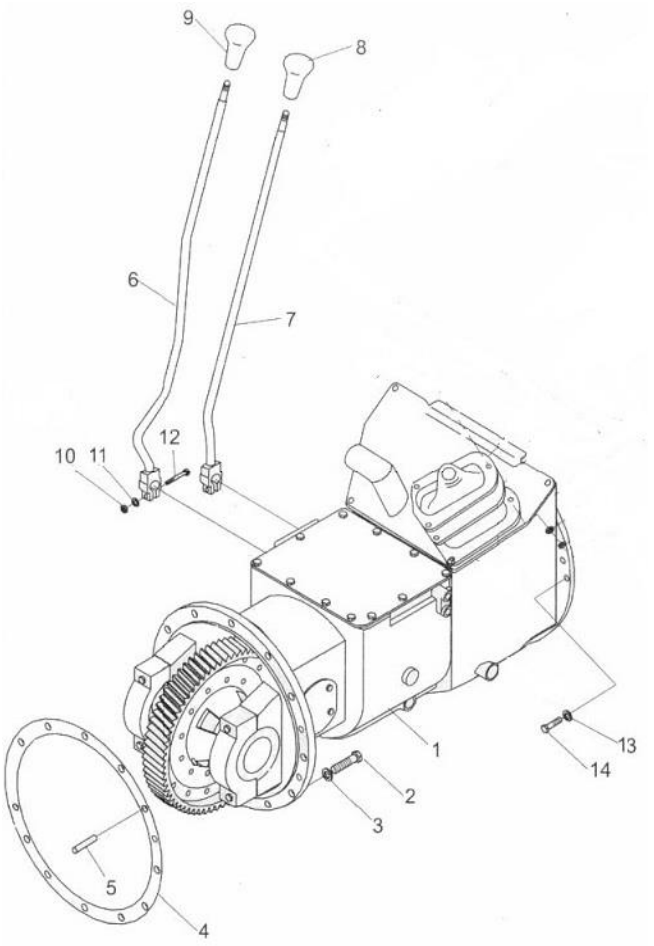

序号 Item No.		代号 Part No.	名称 Description	数量 Q'ty	备注 Remark
1	69060800	M3031602000	Transmission,Mechanical	1	XINCHAI、DACHAI
2		GB/T5785-M12*1.25*40	Bolt M12×1.25×40	12	
3	69000054	GB/T93-12	Washer 12	12	
4	69000538	M3031600001	Gasket	1	
5		GB/T119.2-10*30	Pin 10×30	1	
6	69084138	MJ30339-00002	Speed shift lever	1	
7	69084137	MJ30339-00001	Direction shift lever	1	
8	69001697	M3033900003	Direction shift knob	1	
9	69001537	M3033900004	Speed shift knob	1	
10	69000112	GB/T6170-M8-8J	Nut M8	3	
11	69000062	GB/T93-8	Washer 8	14	
12	69039474	GB/T5782-M8*40	Bolt M8×40	2	
13	69000053	GB/T93-10	Washer 10	9	
14	69000130	GB/T5783-M10*35-8.8J	Bolt M10×35	9	

图31/Fig31. 变速箱(机械式)/TRANSMISSION(CLUTCH TYPE)(1/4)

FD20/25/30/35

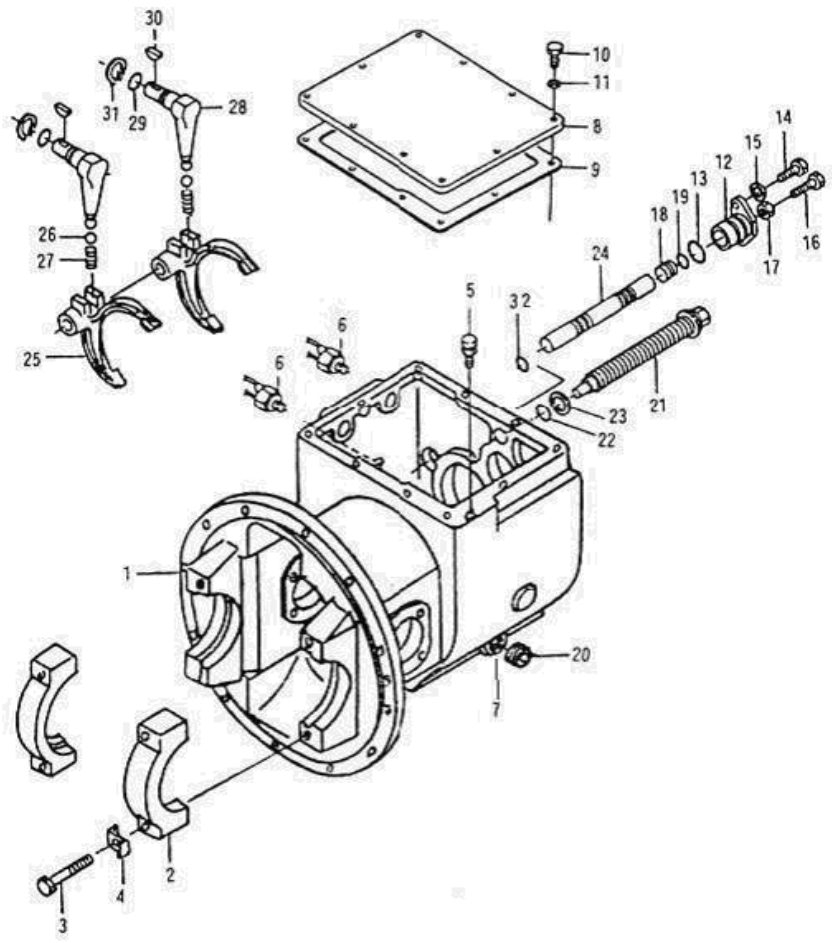

序号 Item No.		代号 Part No.	名称 Description	数量 Q'ty	备注 Remark
1		JDS30.801A	Case,transmission	1	JDS30Ⅲ
2		JDS30.072	Bearing seat	2	JDS30Ⅲ
3		YDS30.089	Bolt	4	
4		JDS25.003	Lock plate	4	JDS25Ⅲ
		YDS30.082	Lock plate	4	JDS30Ⅲ
5		QC/T410-Q900B	Normally closed Breather plug Q900B	1	
6	69136240	JK208	Reverse lamp switch(incl.δ paper pad)	2	JDS25III；JDS30III
7	69138571	JB982-77-18	Combination gasket 18	1	
8	69007590	JDS30.048	Case cover	1	
9	69007592	JDS30.049	Case cover gasket	4	
10	69000123	GB/T5783-M10*20-8.8J	Bolt M10x20	4	
11	69000053	GB/T93-10	Washer 10	1	
12		JDS30.031	Shaft arm	1	
13	69124135	GB1235-35*3.1-G	O-ring 35x3.1	1	
14	69000198	GB/T5783-M8*20-8.8J	Bolt M8x20	2	
15	69000062	GB/T93-8	Washer 8	2	
16	69000134	GB/T5783-M10*45-8.8J	Bolt M10X45	1	
17	69000103	GB/T6170-M10-8J	Nut M10	1	
18	69138384	JDS30.032	Plug	1	
19	69018925	GB1235-20*2.4	O-ring 20×2.4	1	
20	69088744	YBS5.133	Screw plug	1	
21		JDS30.027	Slide bolt	1	
22		GB1235-28*3.5	O-ring 28x3.5	1	
23		JDS30.028	Spring washer with external tooth	1	
24	69007588	JDS30.033	Shift rod	1	

图31/Fig31. 变速箱(机械式)/TRANSMISSION(CLUTCH TYPE)(1/4)

FD20/25/30/35

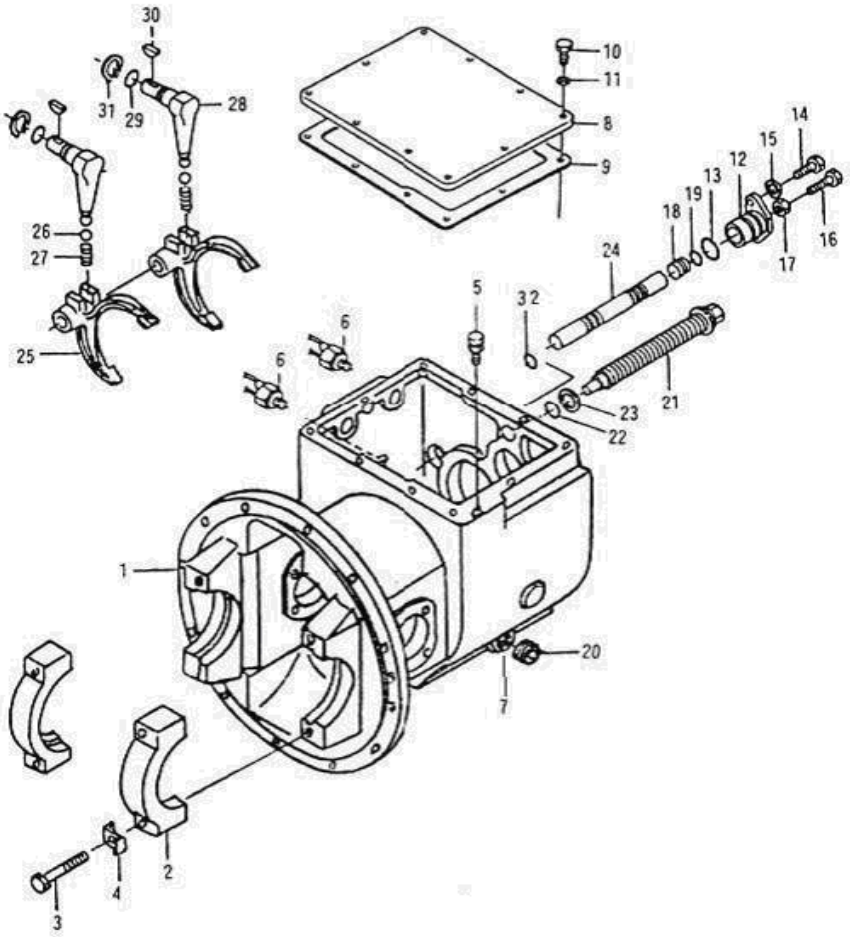

序号 Item No.		代号 Part No.	名称 Description	数量 Q'ty	备注 Remark
25		JDS30.044A	Shift fork	2	
26	69138382	GB/T308-2002	Steel ball 10.0000G200b	2	
27	69007587	JDS30.045	Spring	2	
28	69007589	JDS30.047	Shift lever	2	
29	69017923	GB/T1235-22*2.4	O-ring 22x2.4	2	
30	69138380	GB/T1099.1-5*19	Half round key 5×19	2	
31	69138381	GB/T894.1-22	Axial circlip 22	2	
32	69007588	JDS30.033	Adjusting shim	1/3	

图32/Fig32. 变速箱(机械式)/TRANSMISSION(CLUTCH TYPE)(2/4)

FD20/25/30/35

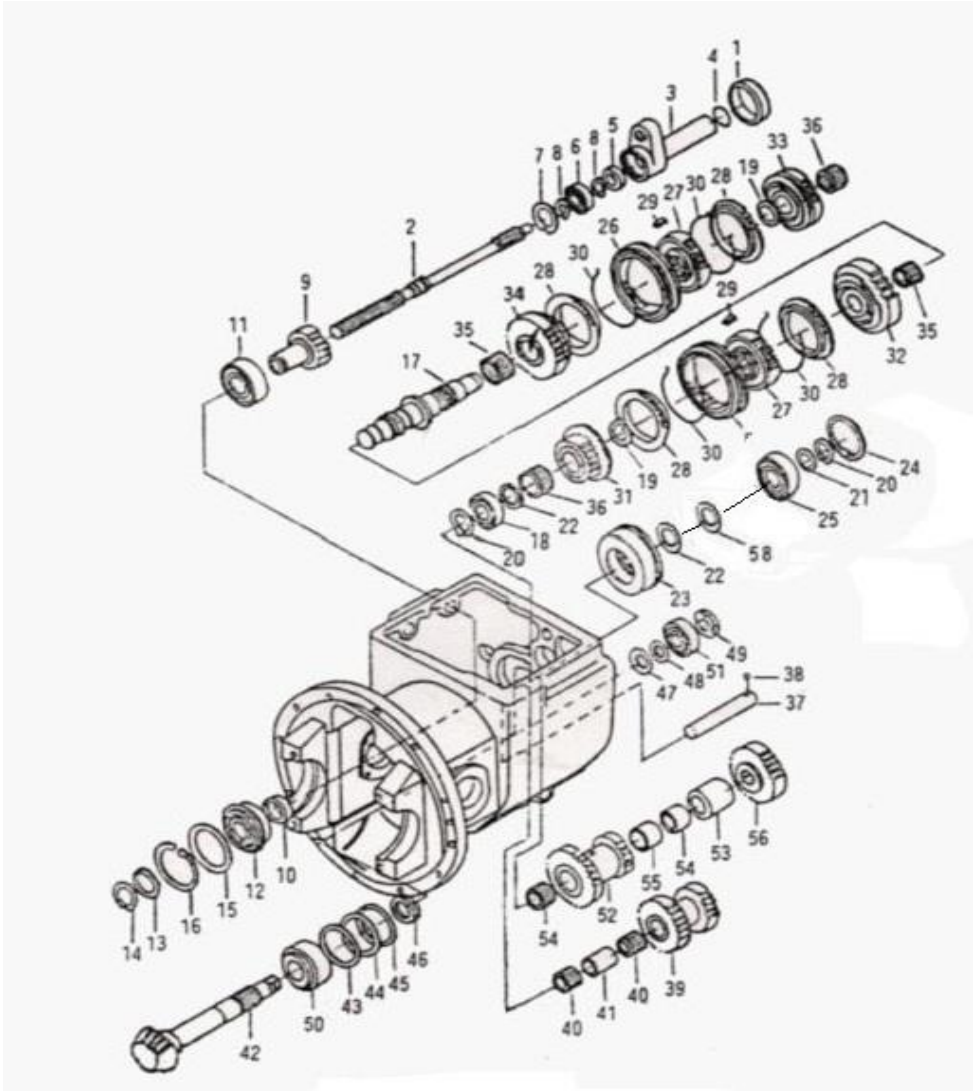

序号 Item No.		代号 Part No.	名称 Description	数量 Q'ty	备注 Remark
01	69007595	JDS30.026	Shaft collar	1	
02	69007608	JDS30.025	Main drive shaft	1	
3		JDS30.024	Bearing retainer	1	
4		GB1235-42*3.5	O-ring 42×3.5	1	
5	69007598	AC1315E0	Oil seal	1	
6	69004924	GB/T276-6005	Bearing 6005	1	
7	69059825	GB/T893.1-Φ47	Orifice circlip 47	1	
8	69000067	GB/T894.1-Φ25	Axial circlip 25	2	
9		JDS30.037	Input gear	1	
10	69007606	JDS30.038	Spacer	1	
11	69136292	GB/T276-1994-01	Deep groove ball bearing 6207	1	
12		GB/T276-6207N	Deep groove ball bearing 6207N	1	
-		GB/T305-72/78.6	Stop ring 72/78.6	1	
13		JDS30.040	Spacer	1	
14	69005095	GB/T894.1-Φ35	Axial Circlip 35	1	
15	69007594	JDS30.039	Bearing Washer	1	
16		GB/T893.2-80	Orifice Circlip 80	1	
17	69007618	JDS30.003	Main shaft	1	
18		GB/T283-NJ306E	Cylindrical roller bearing NJ306E	1	
19	69138379	GB/T894.1-48	Axial Circlip 48	2	
20	69000068	GB/T894.1-Φ30	Axial Circlip 30	2	
21		JDS30.018	Spacer	1/5×2	
22	69059268	JDS30.017	Thrust friction plate	2	
23	69007612	JDS30.019	Bearing retainer	1	
24		GB/T893.2-72	Orifice Circlip 72	1	

图32/Fig32. 变速箱(机械式)/TRANSMISSION(CLUTCH TYPE)(2/4)

FD20/25/30/35

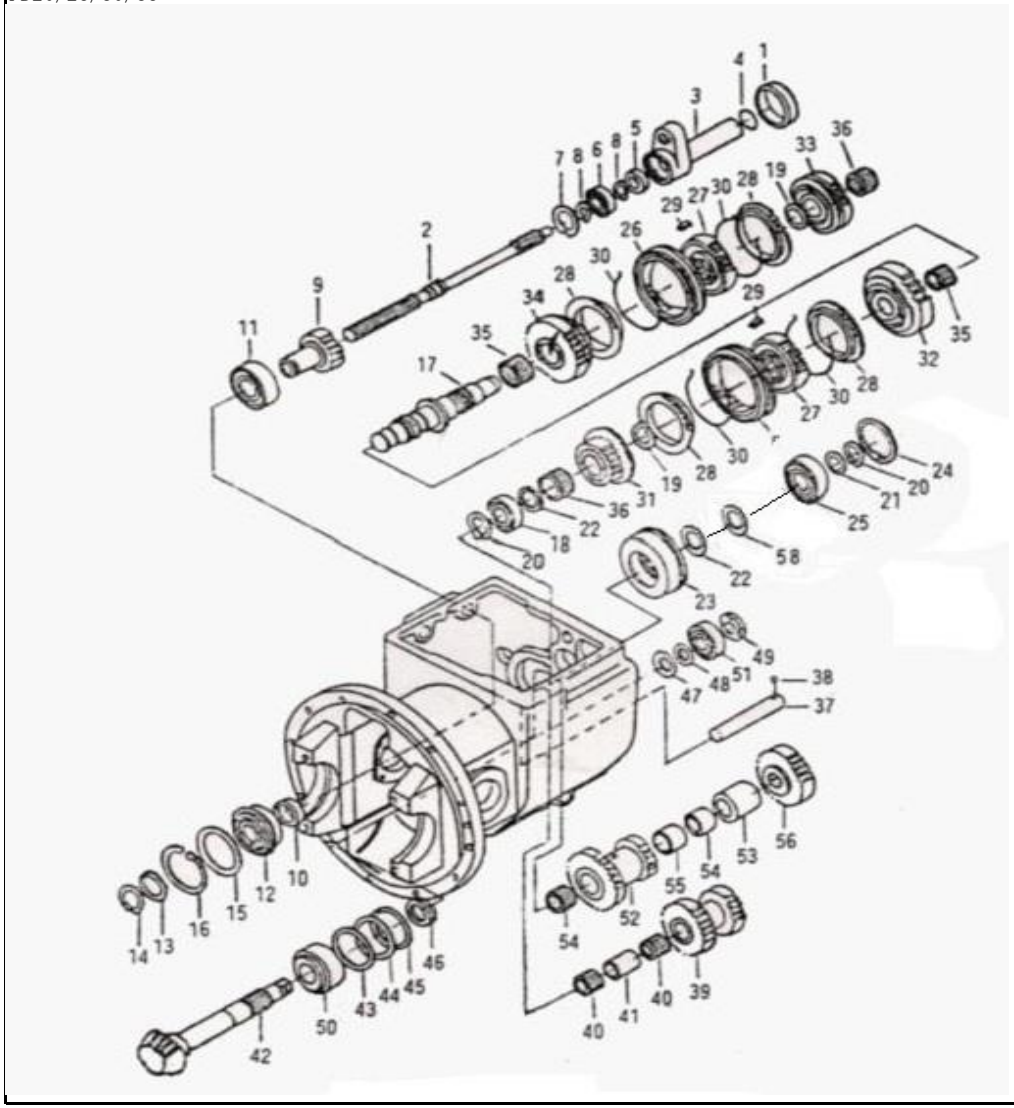

序号 Item No.		代号 Part No.	名称 Description	数量 Q'ty	备注 Remark
25	69018614	GB/T276-1994-6306	Deep groove ball bearing 6306	1	
26		JDS30.010	Engagement sleeve	1	
27		JDS30.007	Clutch secondary gear hub	2	
28	69026978	JDS30.013	Gear sleeve ring 1/2	4	
29	69047322	JDS30.011	Gear sleeve slipper	6	
30		JDS30.012	Spring	4	
31	69007617	JDS30.002	High speed gear	1	
32	69007616	JDS30.004	Low speed gear	2	
33	69007609	JDS30.014	Forward gear	1	
34	69007607	JDS30.005	Reverse gear	1	
35		JDS30.015W	Needle bearing	2	
36	69142016	JB/T7918-K35*40*27	Needle bearing KJ35×40×27S	2	
37		JDS30.006	Idler gear	1	
38	69047105	GB/T308-77-1/4	Steel ball 6.3500G200b	1	
39	69007614	JDS30.008	Idler gear	1	
40		JB/T7918-K25*33*24	Needle bearing KMJ25×33×24	2	
41	69007615	JDS30.009	Bushing	1	
42	69024995	JDS25.041	Output shaft	1	JDS25Ⅲ
-	69007620	JDS30.041	Output shaft	1	JDS30Ⅲ
43		JDS30.043(δ=0.1)	Washer	1/3	
44		JDS30.043(δ=0.2)	Washer	1/3	
45		JDS30.043(δ=0.3)	Washer	1/3	
46	69007610	JDS30.042	Thrust Washer	1	
47		JDS30.020（δ=4）	Thrust plate	1/4	
		JDS30.020（δ=4.5）	Thrust plate	1/4	

图32/Fig32. 变速箱(机械式)/TRANSMISSION(CLUTCH TYPE)(2/4)

FD20/25/30/35

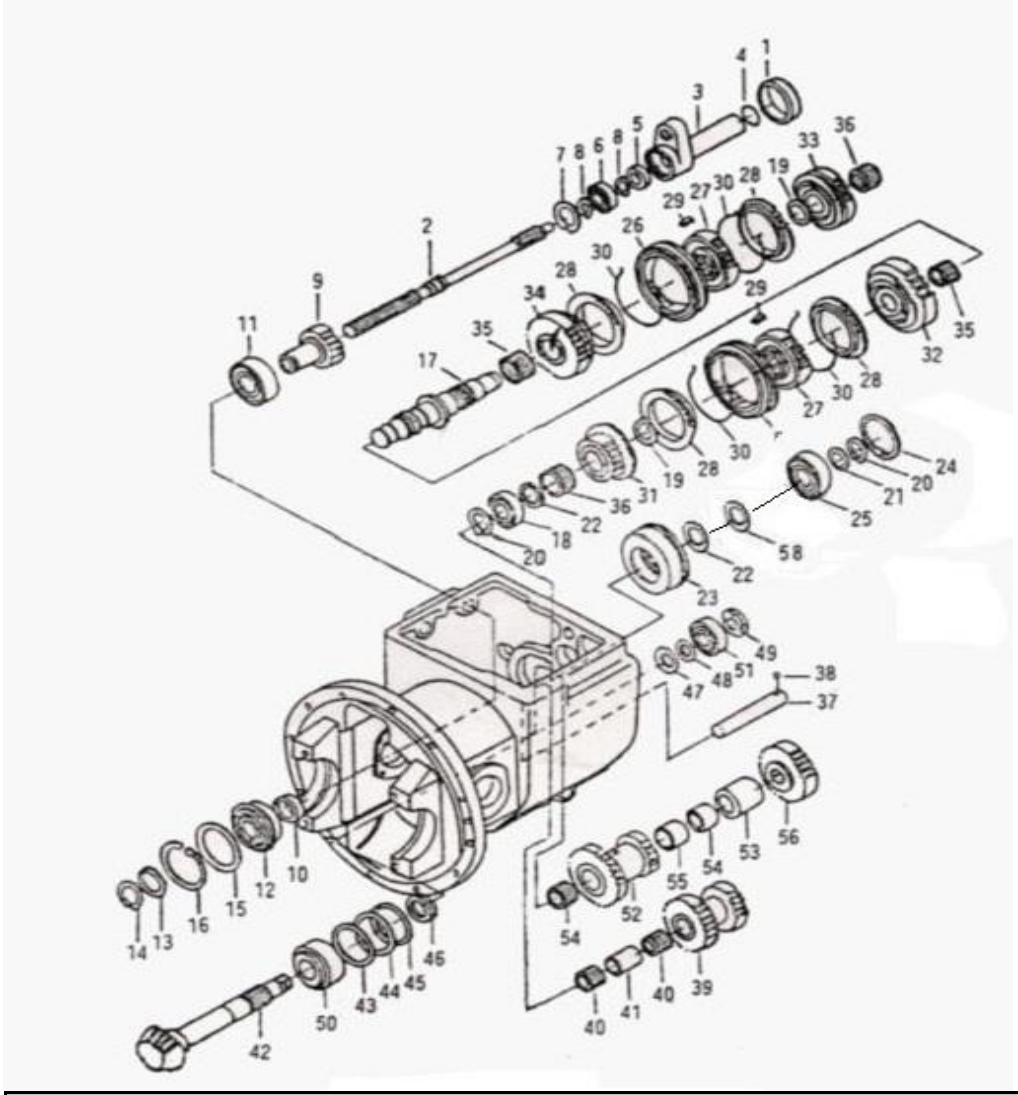

序号 Item No.		代号 Part No.	名称 Description	数量 Q'ty	备注 Remark
		JDS30.020（δ=5）	Thrust plate	1/4	
		JDS30.020（δ=5.5）	Thrust plate	1/4	
48		JDS30.021	Spring washer	1	
49	69007605	JDS30.075	Lock nut	2	
50	69136302	GB/T297-1994-04	Tapered roller Bearing 32208	1	
51	69010962	LS10962	Tapered roller Bearing 32305	1	
52	69007599	JDS30.035	Cluster gear	1	
53	69007597	JDS30.034	Bushing	1	
54	69094471	K35*40*30ZW	Needle bearing K35×40×30ZW	2	
55	69007591	JDS30.036A	Bushing	1	
56	69007601	JDS30.023	Output gear	1	
57		JDS30.010A	Engagement sleeve	1	
58		JDS30.029	Adjusting shim	2/3	

图32/Fig32. 变速箱(机械式)/TRANSMISSION(CLUTCH TYPE)(3/4)

FD20/25/30/35

序号 Item No.		代号 Part No.	名称 Description	数量 Q'ty	备注 Remark
1	69007583	JDS30Ⅱ.001	Paper pad	1	
2	69141941	10063-11070G	Clutch housing	1	
3	69000053	GB/T93-10	Washer10	7	

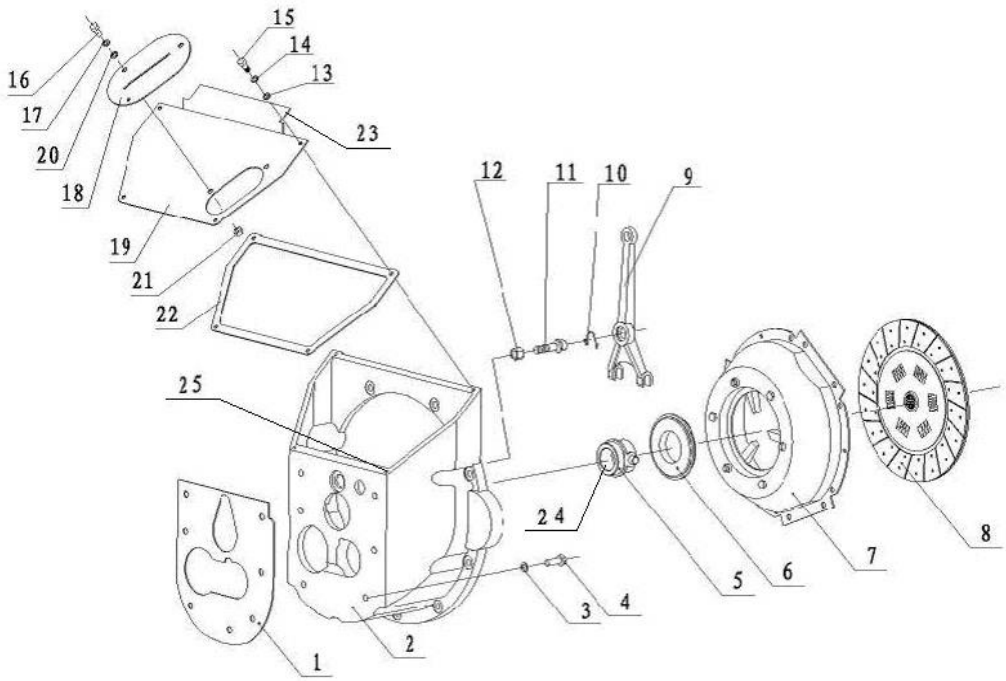

4	69000128	GB/T5783-M10*30-8.8J	Bolt M10X30	7	
5		JDS30Ⅱ.006	Release bearing sleeve	1	
6		13453-12031	Release bearing	1	
7		13453-10402	Platen & cover ass'y	1	
8		13453-10301	Clutch friction plate ass'y	1	
9	69002399	JDS30II.0008	Release fork	1	
10	69138398	10113-10081	Snap ring	1	
11	69138397	13073-12001	Supporting bolt	1	
12	69007585	13073-12011	Adjusting nut	1	
13	69000258	GB/T97.1-6	Washer 6	4	
14	69000060	GB/T93-6	Washer 6	5	
15	69000190	GB/T5783-M6*16-8.8J	Bolt M6x16	4	
16	69000309	GB/T5783-M8*16-8.8J	Bolt M8x16	2	
17	69000259	GB/T97.1-8	Washer 8	2	
18		JDS30Ⅱ.004	Release fork shield	1	
19		JDS30ⅡA.002	Clutch housing	1	
20	69000062	GB/T93-8	Washer 8	2	
21	69000112	GB/T6170-M8-8J	Nut M8	2	
22		JDS30Ⅱ.003	Cushion	1	
23		JDS30Ⅱ.005	Platen	1	
24		JDS30Ⅱ.007	Bushing	1	
25		GB/T67-M6*16	Screw M6x16	1	

图32/Fig32. 变速箱(机械式)/TRANSMISSION(CLUTCH TYPE)(4/4)

FD20/25/30/35

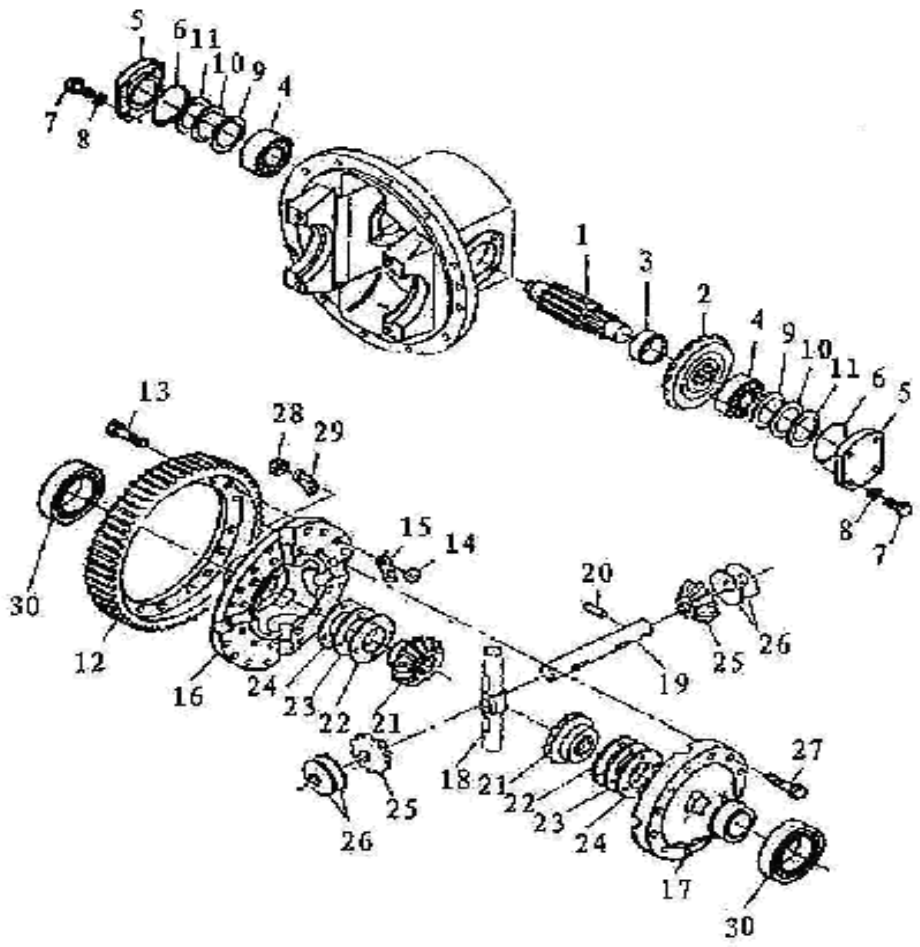

序号 Item No.		代号 Part No.	名称 Description	数量 Q'ty	备注 Remark
1	69141863	YDS30.070	Gear shaft	1	JDS30Ⅲ
2	69135190	YDS30DY.071	Spiral bevel gear	1	
3	69135191	YDS30.086	Bushing	1	
4	69009443	LS9443	Tapered roller bearing 32207	2	
5	69080617	YDS18.005	Bearing cap	2	
6	69136718	GB1235-76-75×*3.1	O-ring 75x3.1	2	
7	69000128	GB/T5783-M10*30-8.8J	Bolt M10X30	8	
8	69000062	GB/T93-8	Washer 8	1	
9	69135195	YDS30.090(δ=0.1)	Washer	1/3x2	
10	69135197	YDS30.090(δ=0.2)	Washer	1/3x2	
11	69135198	YDS30.090(δ=0.5)	Washer	1/3x2	
12	69095278	YDS30.073	Gear ring	1	JDS30Ⅲ
13	69135199	YDS30.077	Bolt	16	JDS30Ⅲ
14	69135200	GB/T 6176-2000-M10*1.25	Nut M10×1.25	16	JDS30Ⅲ
15	69135201	YDS30.088	Lock plate	8	JDS30Ⅲ
16		YDS30.803	Differential housing	1	JDS30Ⅲ
17		JDS30HA.803	Differential housing	1	JDS37ⅢHA
18	69135204	14453-52101A	Cross shaft	1	
19	69135204	14453-52101A	Cross shaft	1	
20	69135204	14453-52101A	Cross shaft	1	
21	69007169	YDS25.011	Gear,half axle	2	JDS25Ⅲ
		YDS25.085	Gear,half axle	2	JDS30Ⅲ
22		YDS25.012(δ=1.8)	Washer	1/4x2	JDS25Ⅲ
		YDS25.012(δ=2.0)	Washer	1/4x3	JDS25Ⅲ
		YDS25.012(δ=2.2)	Washer	1/4x4	JDS25Ⅲ

图32/Fig32. 变速箱(机械式)/TRANSMISSION(CLUTCH TYPE)(4/4)

FD20/25/30/35

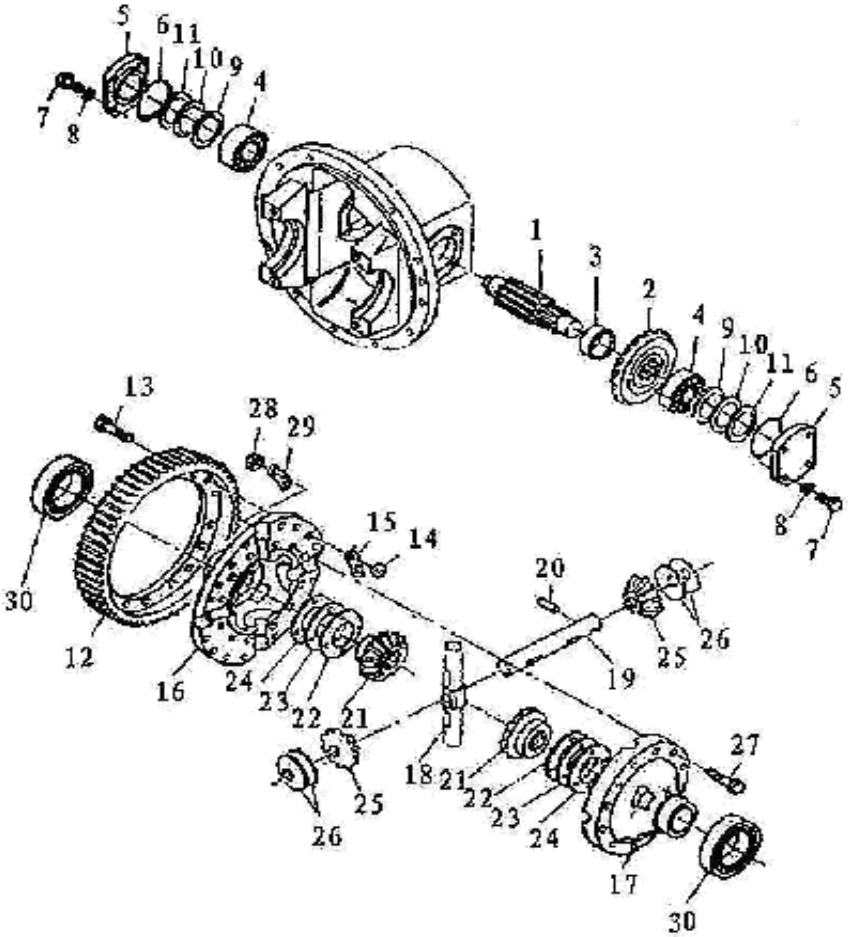

序号 Item No.		代号 Part No.	名称 Description	数量 Q'ty	备注 Remark
		YDS25.012(δ=2.4)	Washer	1/4x5	JDS25Ⅲ
23		YDS30.079S(δ=2.2)	Washer	1/3x2	JDS30Ⅲ
		YDS30.079S(δ=2.4)	Washer	1/3x2	JDS30Ⅲ
24		YDS30.079S(δ=2.5)	Washer	1/3x2	JDS30Ⅲ
25	69060208	YDS30.083	Planetary gear	4	JDS30Ⅲ
26	69135208	YDS30.084	Thrust washer	4	JDS30Ⅲ
27	69135209	YDS30.076	Bolt	12	JDS30Ⅲ
28	69135210	GB/T 6176-2000-M10×1.25 12.9J	Nut M10×1.25 grading 12.9	12	
29	69135211	YDS30.078	Lock plate	6	JDS30Ⅲ
30	69135212	GB/T 276-1994	Deep groove ball bearing 6213	2	JDS30Ⅲ

图33/Fig33. 2-2.5t驱动桥/2-2.5t DRIVE AXLE

FG(L)20/25T-AWA3

FD20/25T-AWV3

FD20/25T-AWE3

FD20/25T-AG(1)3

FD20/25T-AGK3

FGL20/25T-AWG3

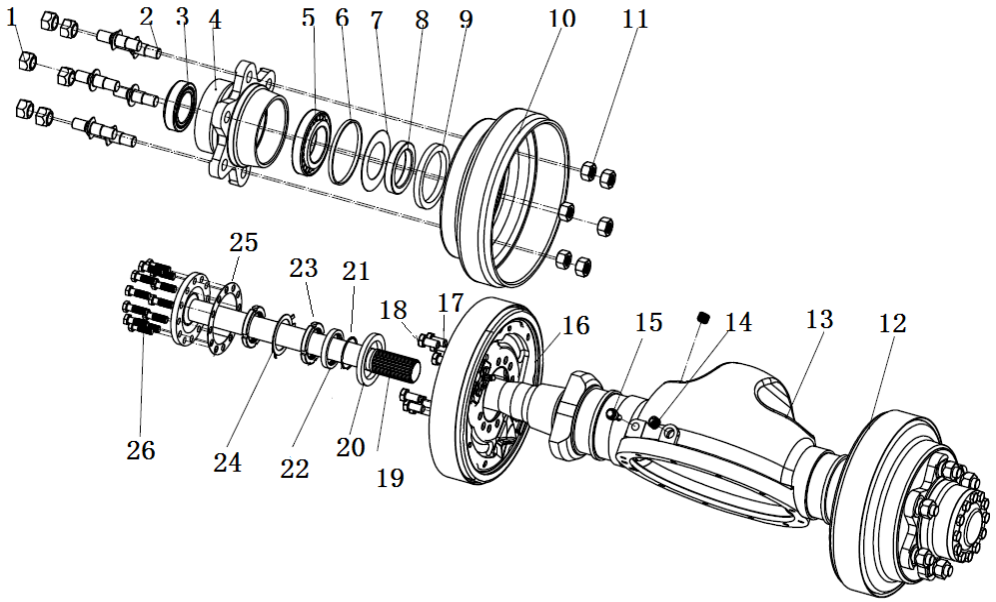

序号 Item No.		代号 Part No.	名称 Description	数量 Q'ty	备注 Remark
01	69130911	24354-32311	Hub nut	12	
02	69135213	24353-72001	Hub bolt	12	
03	69135214	Z-33012	Tapered roller bearing 33012	2	
04	69135215	A20A3-02011JXX	Hub	2	
05	69080813	GB/T297-30214	Tapered roller bearing 30214	2	
06	69021320	22493-00020G	Washer-ø125*ø119*7.5	2	
07	69021319	22493-00030G	Washer-ø118*ø72.5*1	2	
08	69024872	24453-02121G	Oil seal retainer ring-ø100*ø125*12	2	
09	69135217	Z6351-01004	Oil seal	2	
10	69135218	22673-02031	Brake drum	2	
11	69135219	B4223-00020	Nut M20×1.5	12	
12	69131591	Q02A1-1790R	Wheel brake ass'y(right)	1	
13	69135220	A22A3-02041A	Axle housing	1	
14	69092922	22193-03001	Plug	3	
15	69070030	90106-65690	Breather plug ass'y	1	
16	69131590	Q02A1-1270L	Wheel brake ass'y(left)	1	
17	69135221	25953-72001	Bolt	4	
18	69135222	A22A3-02051	Bolt	12	
19	69057812	A20A3-02021	Half axle	2	
20	69134528	25555-00009	Oil seal retainer ring-ø75*ø100*10	2	
21	69135223	25555-00008	O-ring 59.6*2.4	2	
22	69131614	25555-00007	Bushing	2	
23	69130892	25555-00004	Round nut M58×2	4	
24	69130893	25555-00006	Thrust washer d58	2	
25	69135224	A22A3-02031	Half axle gasket	2	

图33/Fig33. 2-2.5t驱动桥/2-2.5t DRIVE AXLE

FG(L)20/25T-AWA3

FD20/25T-AWV3

FD20/25T-AWE3

FD20/25T-AG(1)3

FD20/25T-AGK3

FGL20/25T-AWG3

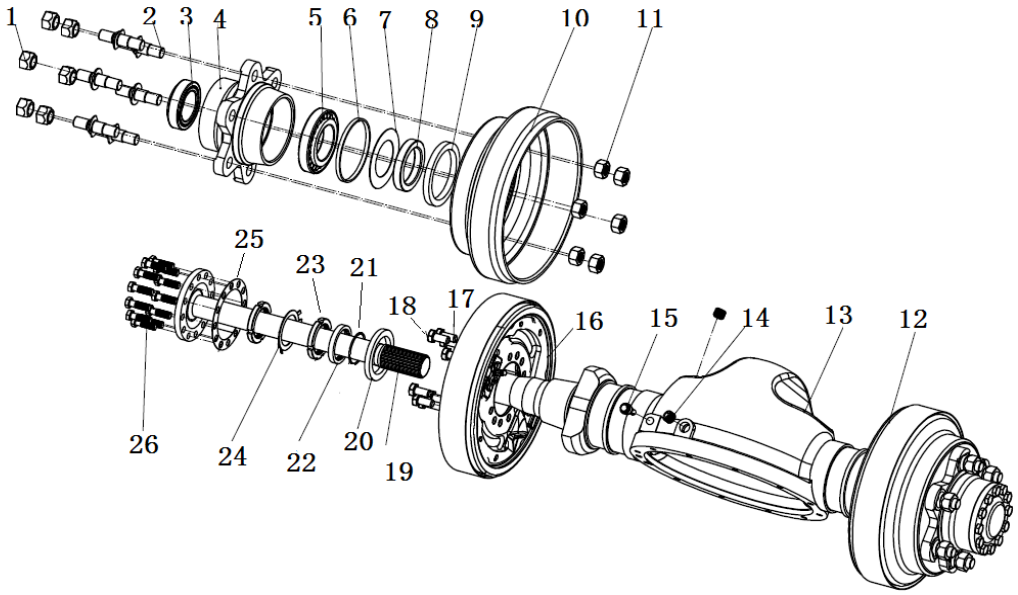

序号 Item No.		代号 Part No.	名称 Description	数量 Q'ty	备注 Remark
26	69135225	24453-02061	Bolt	24	

图34/Fig34. 2-2.5t驱动桥/2-2.5t DRIVE AXLE

FD20/25T-AWE5、FD20/25T-AWV5

FG(L)20/25T-AWA5、FD20/25T-AG(1)5

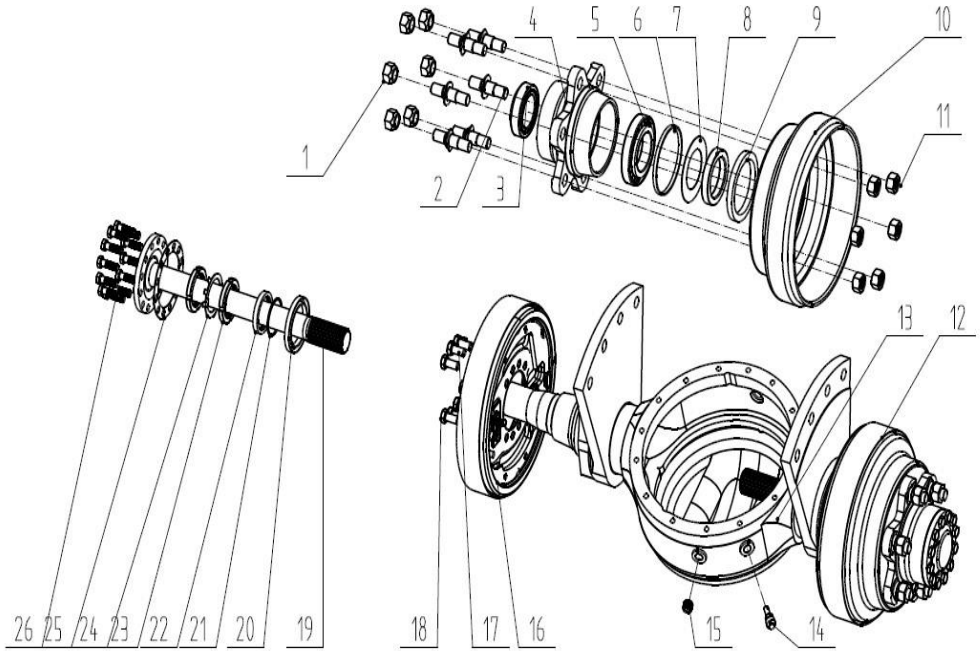

序号 Item No.		代号 Part No.	名称 Description	数量 Q'ty	备注 Remark
01		24354-32311B	Hub nut	12	
02		24353-72001B	Hub bolt	12	
03	69135214	Z-33012	Tapered roller bearing33012	2	
04	69135215	A20A3-02011JXX	Hub	2	
05	69080813	GB/T297-30214	Tapered roller bearing30214	2	
06	69021320	22493-00020G	Washer-ø125*ø119*7.5	2	
07	69021319	22493-00030G	Washer-ø118*ø72.5*1	2	
08	69024872	24453-02121G	Oil seal retainer ring-ø100*ø125*12	2	
09	69135217	Z6351-01004	Oil seal	2	
10	69135218	22673-02031	Brake hub	2	
11	69135219	B4223-00020	Nut M20×1.5	12	
12		REF00056TL	Wheel brake ass'y(left)	1	
13		H2TZL-10201A	Axle housing	1	
14	69070030	90106-65690	Breather plug ass'y	1	
15	69092922	22193-03001	Plug	3	
16		REF00056TR	Wheel brake ass'y(right)	1	
17	69135221	25953-72001	Bolt M14*1.5*38	4	
18	69135222	A22A3-02051	Bolt M14*1.5*30	12	
19		H2TZL-12001	Half axle	2	
20	69134528	25555-00009	Oil seal retainer ring-ø75*ø100*10	2	
21	69135223	25555-00008	O-ring 59.6*2.4	2	
22	69131614	25555-00007	Bushing	2	
23	69130892	25555-00004	Nut M58×2	4	
24	69130893	25555-00006	Thrust washer d58	2	
25	69135224	A22A3-02031	Half axle gasket	2	

图34/Fig34. 2-2.5t驱动桥/2-2.5t DRIVE AXLE

FD20/25T-AWE5、FD20/25T-AWV5

FG(L)20/25T-AWA5、FD20/25T-AG(1)5

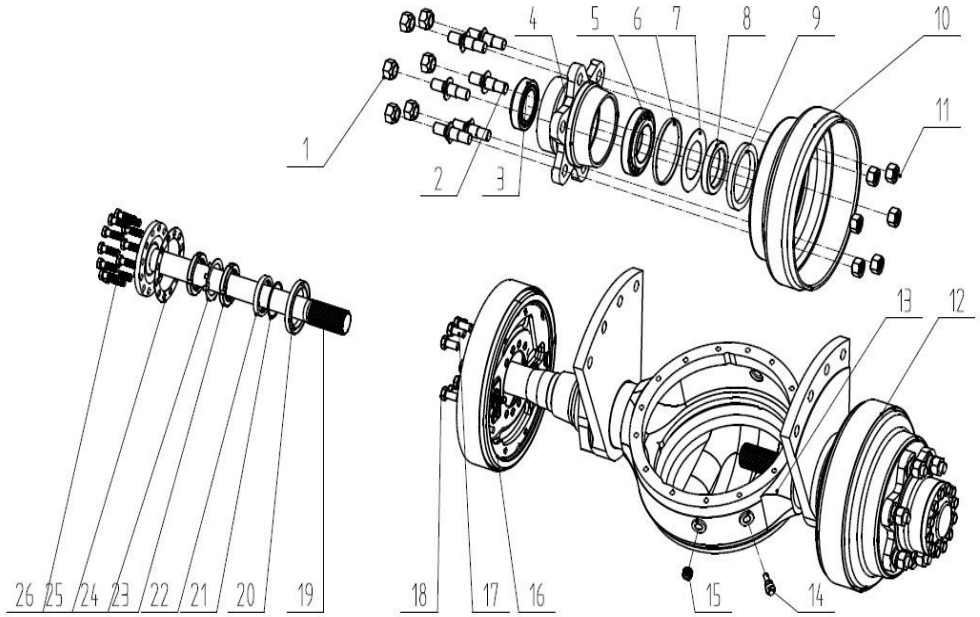

序号 Item No.		代号 Part No.	名称 Description	数量 Q'ty	备注 Remark
26		24453-02061B	Bolt	24	

图35/Fig35. 3-3.5t驱动桥/3-3.5t DRIVE AXLE

FG(L)30/35T-AWA3、FD30/35T-AGK3

FD30/35T-AG(1)3、FD30/35T-AWV3

FGL30/35T-AWG3

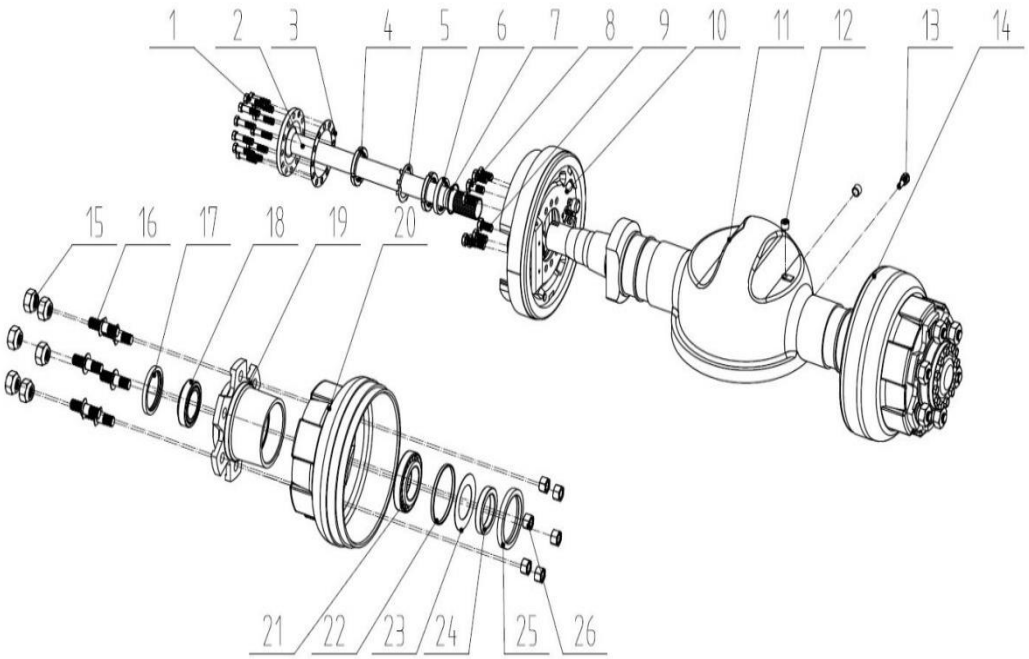

序号 Item No.		代号 Part No.	名称 Description	数量 Q'ty	备注 Remark
01	69135225	24453-02061	Half axle bolt	24	
02	69011550	A22J3-02011	Half axle	2	
03	69135224	A22A3-02031	Half axle gasket	2	
04	69130892	25555-00004	Round nut M58×2	4	
05	69130893	25555-00006	Thrust washer d58	2	
06	69131614	25555-00007	Washer 60×75×10	2	
07	69135223	25555-00008	O-ring Φ59.6×2.4	2	
08	69135222	A22A3-02051	Bolt	12	
09	69135221	25953-72001	Bolt	4	
10	69131592	Q03B1-1270L	Wheel brake ass'y (left)	1	
11	69135226	A22J3-02021A	Axle housing	1	
12	69092922	22193-03001	Plug	3	
13	69070030	90106-65690	Breather plug ass'y	1	
14	69135227	Q03B1-1790R	Wheel brake ass'y (right)	1	
15	69058016	23913-02041	Hub nut	12	
16	69120312	25303-02102	Hub bolt	12	
17	69134528	25555-00009	Oil seal Φ75×100×10	2	
18	69135214	Z-33012	Bearing 33012	2	
19	69135228	25555-00003	Hub	2	
20	69007794	24453-02131	Brake drum	2	
21	69080813	GB/T297-30214	Bearing 30214	2	
22	69021320	22493-00020G	Spare washer 125×119×7.5	2	
23	69021319	22493-00030G	Oil retainer ring 111×72.5×1	2	
24	69024872	24453-02121G	Oil seal retainer ring-ø72×ø100×16	2	
25	69135217	Z6351-01004	Oil seal ø100×ø125×12	2	

图35/Fig35. 3-3.5t驱动桥/3-3.5t DRIVE AXLE

FG(L)30/35T-AWA3、FD30/35T-AGK3

FD30/35T-AG(1)3、FD30/35T-AWV3

FGL30/35T-AWG3

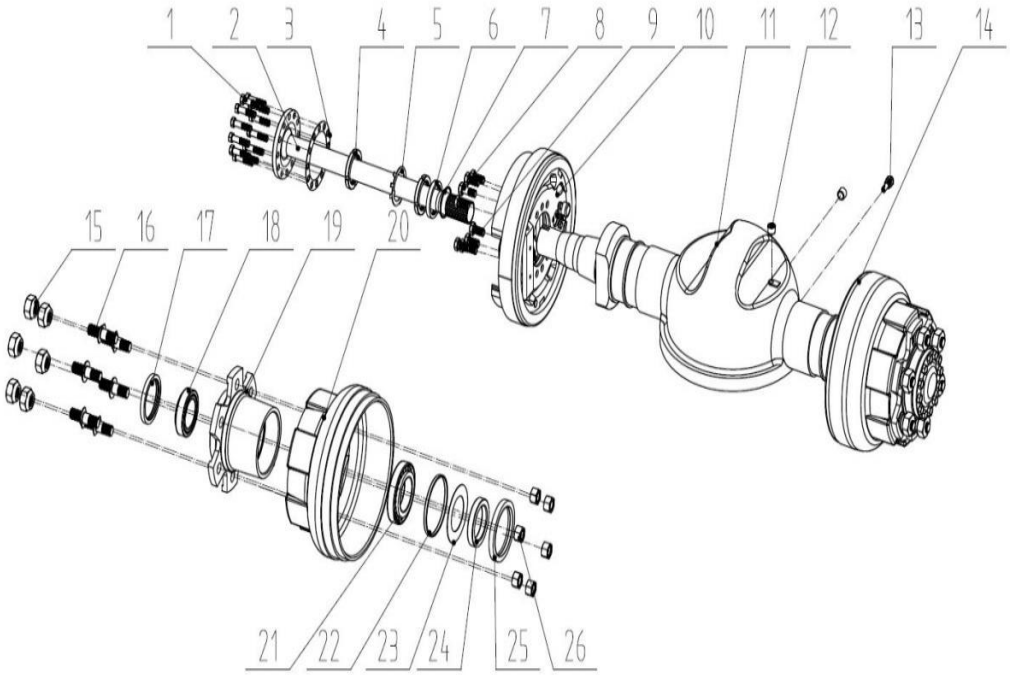

序号 Item No.		代号 Part No.	名称 Description	数量 Q'ty	备注 Remark
26	69135219	B4223-00020	Nut M20×1.5	12	

图36/Fig36. 3-3.5t驱动桥/3-3.5t DRIVE AXLE

FD30/35T-AWE5、FD30/35T-AWV5、FD30/35T-AGK5

FG(L)30/35T-AWA5、FD30/35T-AG(1))5

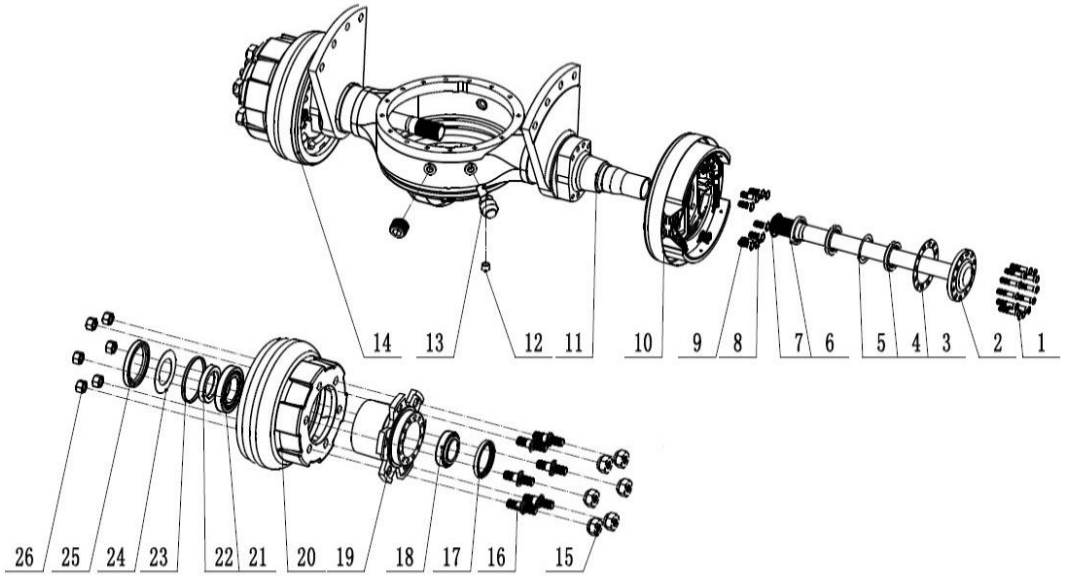

序号 Item No.		代号 Part No.	名称 Description	数量 Q'ty	备注 Remark
01		24453-02061B	Half axle bolt	24	
02	69023891	H2T73-02001	Half axle	2	
03	69135224	A22A3-02031	Half axle gasket	2	
04	69130892	25555-00004	Round nut M58×2	4	
05	69130893	25555-00006	Thrust washer d58	2	
06	69131614	25555-00007	Washer 60×75×10	2	
07	69135223	25555-00008	O-ring Φ59.6×2.4	2	
08	69135221	25953-72001	Brake bolt	4	
09	69135222	A22A3-02051	Brake bolt	12	
10		24433-70411	Wheel brake ass'y (left)	1	
11		H2T73-10201	Axle housing	1	
12	69092922	22193-03001	Plug	3	
13	69121281	22253-02063C	Breather plug ass'y	1	
14		24433-70401	Wheel brake ass'y (right)	1	
15		23913-02041B	Hub Nut	12	
16		25303-02102B	Hub bolt	12	
17	69134528	25555-00009	Oil seal Φ75×100×10	2	
18	69135214	Z-33012	Bearing 33012	2	
19	69135228	25555-00003	Hub	2	
20	69007794	24453-02131	Brake Hub	2	
21	69080813	GB/T297-30214	Bearing 30214	2	
22	69024872	24453-02121G	Oil seal retainer ring-ø72×ø100×16	2	
23	69021320	22493-00020G	Spare washer 125×119×7.5	2	
24	69021319	22493-00030G	Oil retainer ring 111×72.5×1	2	
25	69135217	Z6351-01004	Oil seal ø100×ø125×12	2	

图36/Fig36. 3-3.5t驱动桥/3-3.5t DRIVE AXLE

FD30/35T-AWE5、FD30/35T-AWV5、FD30/35T-AGK5

FG(L)30/35T-AWA5、FD30/35T-AG(1))5

序号 Item No.		代号 Part No.	名称 Description	数量 Q'ty	备注 Remark
26		B4223-00020B	Nut M20×1.5	12	

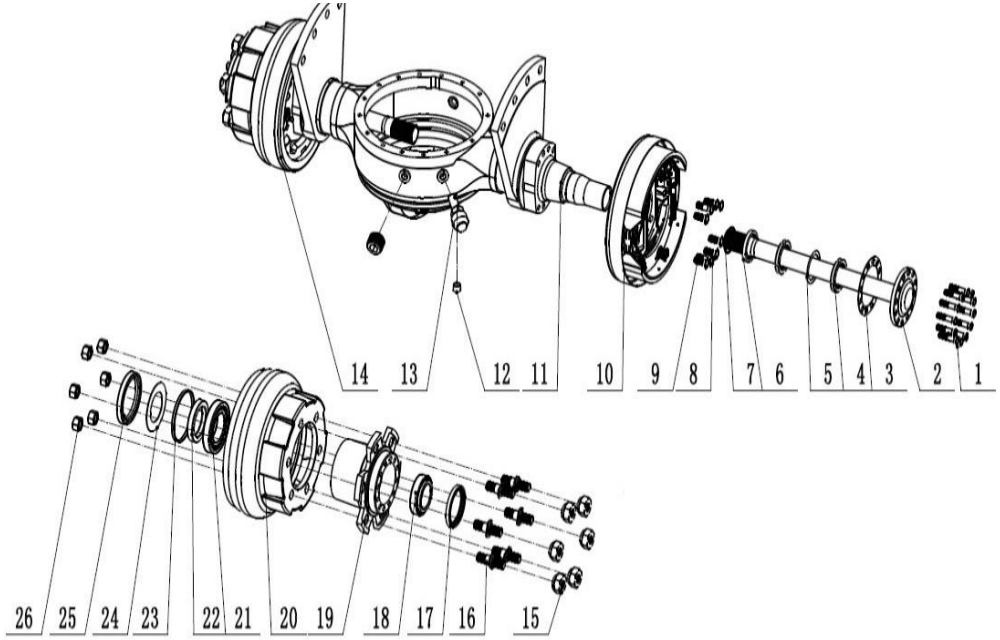
14
13
12
11
10
9
8
7
6
5
4
3
2
1
26
25
24
23
22
21
20
19
18
17
16
15

图37-1/Fig37-1. 2-2.5t前轮(单轮)/2-2.5t FRONT WHEEL ASS'Y(SINGLE TIRE)

FD20/25T-AWE5、FD20/25T-AWV、FD20/25T-AGK

FG(L)20/25T-AWA、FD20/25T-AG(1)

FGL20/25T-AWG

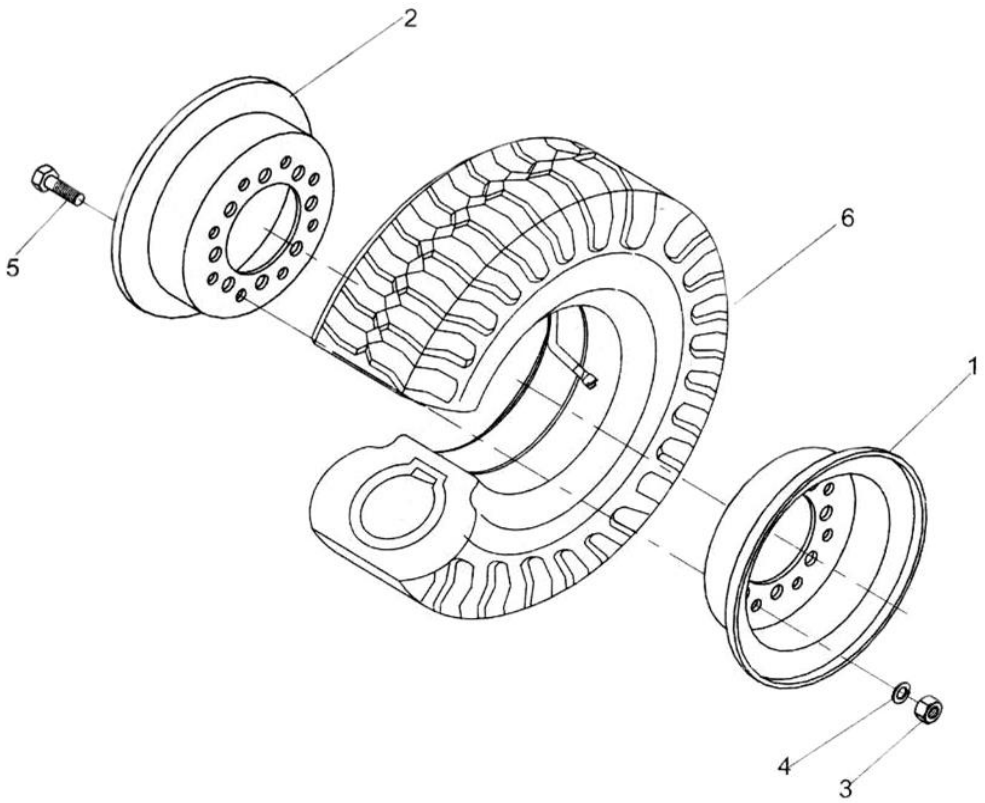

序号 Item No.		代号 Part No.	名称 Description	数量 Q' ty	备注 Remark
A		-	Front wheel ass'y	2	
01	69136177	M2033302001	Rim ,outside(5.00S-12)	2	
02	69136176	M2033302002	Rim ,inside(5.00S-12)	2	
03	69039340	GB/T6170-M16-10J	Nut M16	12	
04	69000056	GB/T93-16	Washer 16	12	
05	69006037	M2033300001	Rim bolt	12	
06	69067582	M2033301000-1-Q	Tire ass'y(7.00-12-12PR)	2	

图37-2/Fig37-2. 2-2.5t前轮(双轮)/2-2.5t FRONT WHEEL ASS'Y(DOUBLE TIRE)

FD20/25T-AWE5、FD20/25T-AWV、FD20/25T-AGK

FG(L)20/25T-AWA、FD20/25T-AG(1)

FGL20/25T-AWG

序号 Item No.		代号 Part No.	名称 Description	数量 Q' ty	备注 Remark
A		-	Front wheel ass'y	2	
1	69067582	M2033301000-1-Q	Tire ass'y (7.00-12-12PR)	4	
2	69042760	A20S21-02000-B	Rim ass'y (5.00S-12)	2	

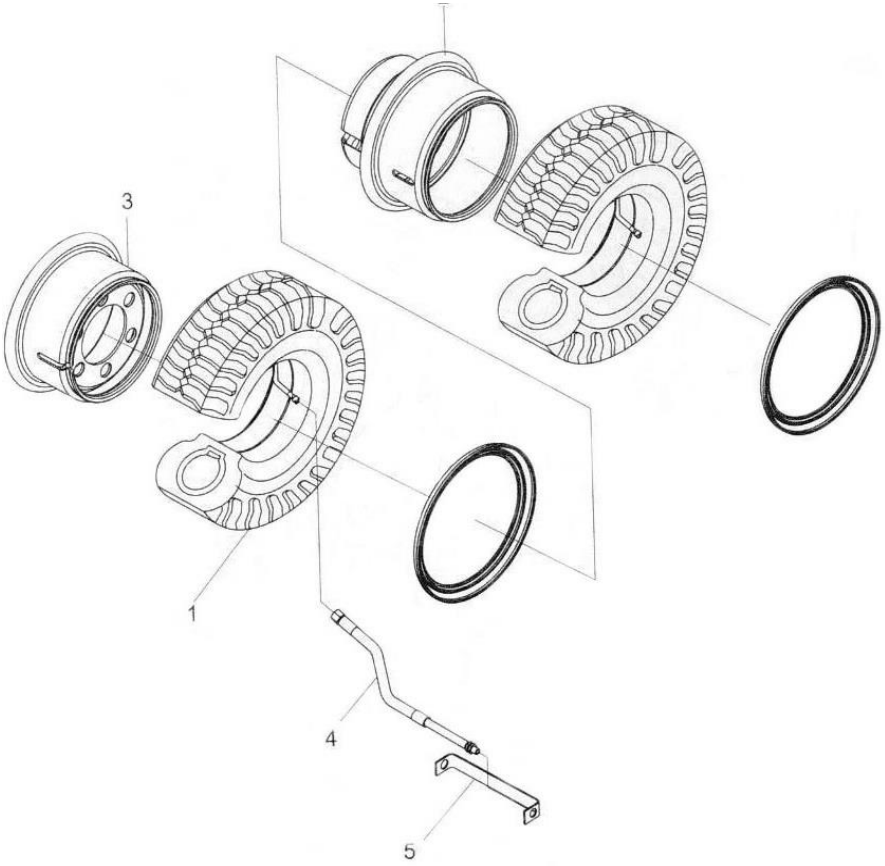

3	69042759	A20S21-01000-B	Rim ass'y (5.00S-12)	2	
4	69002155	30S21-00006	Extended air cock	2	
5	69037432	30S21-00003A	Air cock bracket	2	

图38-1Fig38-1. 3-3.5t前轮(单轮))/3-3.5t FRONT WHEEL ASS'Y(SINGLE TIRE)

FD30/35T-AWE5、FD30/35T-AWV、FD30/35T-AGK

FG(L)30/35T-AWA、FD30/35T-AG(1)

FGL30/35T-AWG

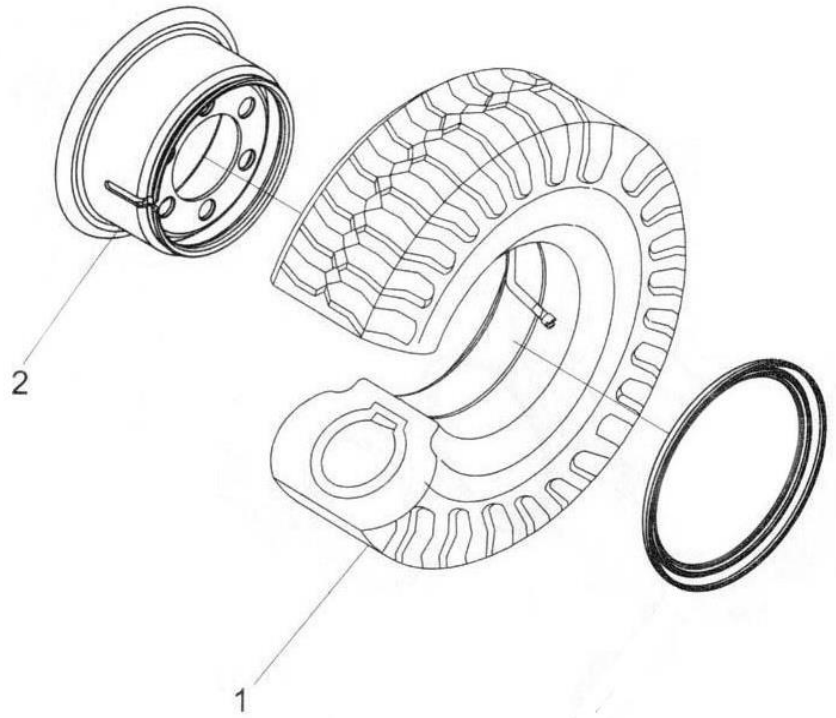

序号 Item No.		代号 Part No.	名称 Description	数量 Q'ty	备注 Remark
A		-	Front wheel ass'y	2	
1	69067587	M3033301000-1-Q	Tire (28×9-15-14PR)	2	
2	69084362	M3033302000-1	Rim (7.00T-15)	2	

图38-2Fig38-2. 3-3.5t前轮(双轮))/3-3.5t FRONT WHEEL ASS'Y(DOUBLE TIRE)

FD30/35T-AWE5、FD30/35T-AWV、FD30/35T-AGK

FG(L)30/35T-AWA、FD30/35T-AG(1)

FGL30/35T-AWG

序号 Item No.		代号 Part No.	名称 Description	数量 Q'ty	备注 Remark
A		-	Front wheel ass'y	2	
1	69067587	M3033301000-1-Q	Tire (28×9-15-14PR)	4	
2	69084362	M3033302000-1	Rim ass'y(7.00T-15)	2	

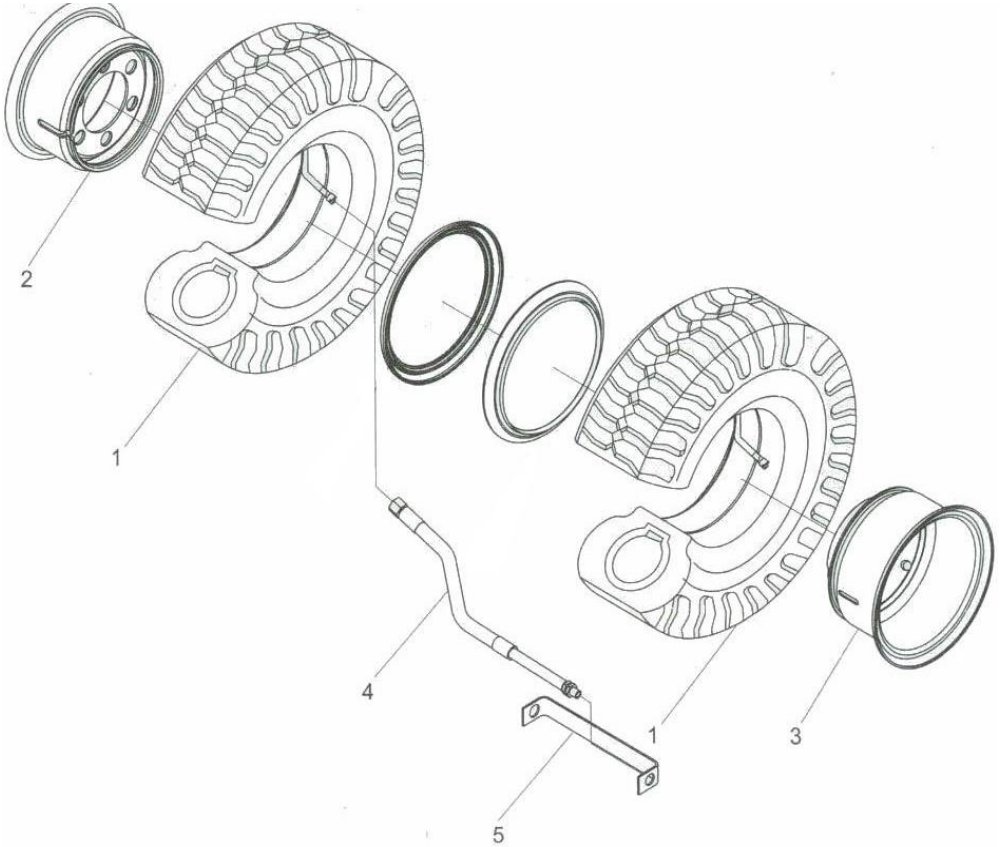

3	69084361	30S21-01000-1	Rim ass'y (7.00T-15)	2	
4	69002155	30S21-00006	Extended air cock	2	
5	69037432	30S21-00003A	Air cock bracket	2	

图39/Fig39. 2-2.5t轮式制动器/2-2.5t WHEEL BRAKE

FD20/25T-AWE5、FD20/25T-AWV

FG(L)20/25T-AWA、FD20/25T-AG(1)

FGL20/25T-AWG

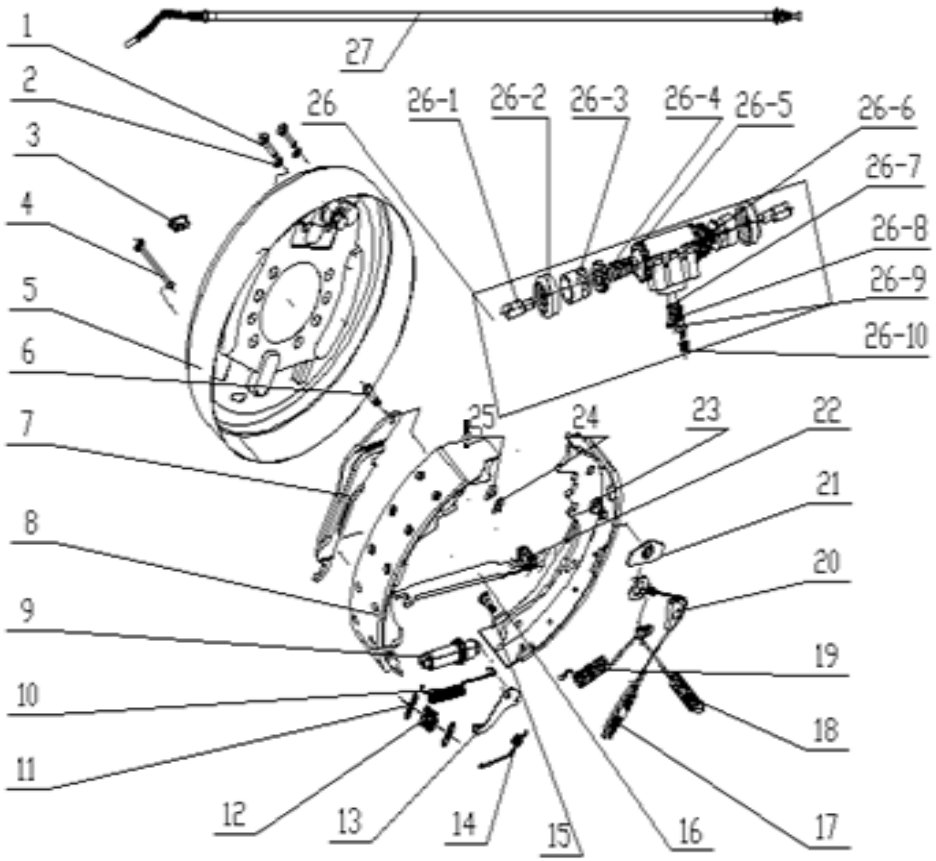

序号 Item No.		代号 Part No.	名称 Description	数量 Q' ty	备注 Remark
A		REF00056TL	Wheel brake ass'y(left)	1	
1		GB5782-M8*16-6g	Bolt	2	
2	69000062	GB/T93-8	Washer	2	
3	69021300	24433-70040G	Rubber plug	1	
4		24433-70010G-TLF	Compressed spring rod	2	
5		FH31062-010L	Brake plate ass'y (left)	1	
6	69135243	22673-72231	Rod pin	1	
7		23653-72071G-L	Parking brake lever (left)	1	
8		FH31062-020	Brake shoe ass'y (left)	1	
9		24433-74000G-TLFL	Left slack adjuster assembly	1	
10	69008121	24433-70050G	Drag spring	1	
11	69135275	24433-70020G	Compressed spring	4	
12	69135276	24433-70030G	Drag spring	2	
13		24433-70100G-L	Left pawl	1	
14		24433-70090G-L	Left torsion spring	1	
15		24433-70110G	pin	1	
16	69024875	23653-72081	Left hand brake push rod	1	
17		24433-73000G-FH	Spring stay device	1	
18		FH31063NS-002L	Left return spring (rear)	1	
19		FH31063NS-001L	Left return spring (front)	1	
20		24433-70081G	Guide block	1	
21	69135277	24433-70060G	Guide plate	1	
22	69135237	23673-72391	Push rod spring	1	
23		FH31062-021L	Left brake shoe	1	
24	69135283	24433-70170G	Rod pin retaining ring	1	

图39/Fig39. 2-2.5t轮式制动器/2-2.5t WHEEL BRAKE

FD20/25T-AWE5、FD20/25T-AWV

FG(L)20/25T-AWA、FD20/25T-AG(1)

FGL20/25T-AWG

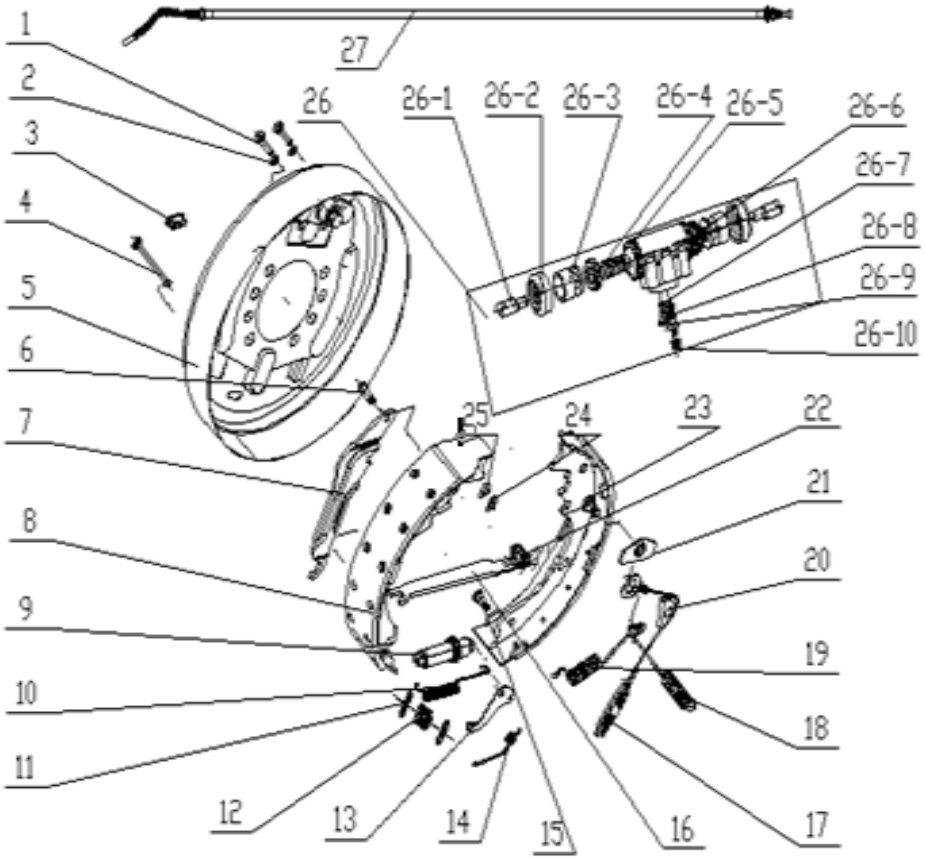

序号 Item No.		代号 Part No.	名称 Description	数量 Q' ty	备注 Remark
25	69135232	24433-70160G	Spring Washer	1	
26	69142788	22673-72041-L	Brake pump ass'y (Left)	1	
26-1	69142789	33673-72111	Cylinder piston rod	2	
26-2		33673-72101	Pump shield	2	
26-3	69135253	22673-72071	Pump piston	2	
26-4	69135254	22673-72081G	Pump bowl	2	
26-5	69135255	22673-72091	Sub pump spring	1	
26-6		22673-72061-L	Left brake Cylinder	1	
26-7	69135256	24433-76070G	Oil stopper	1	
26-8	69135269	24433-76080G	Protective plug	1	
26-9	69011657	24433-76090G	Cylinder bieed screw	1	
26-10		24433-76100G	Cylinder bieed screw cap	1	
27	69006655	0C11246-14603	Parking brake cable(left)	1	

图39/Fig39. 2-2.5t轮式制动器/2-2.5t WHEEL BRAKE

FD20/25T-AWE5、FD20/25T-AWV

FG(L)20/25T-AWA、FD20/25T-AG(1)

FGL20/25T-AWG

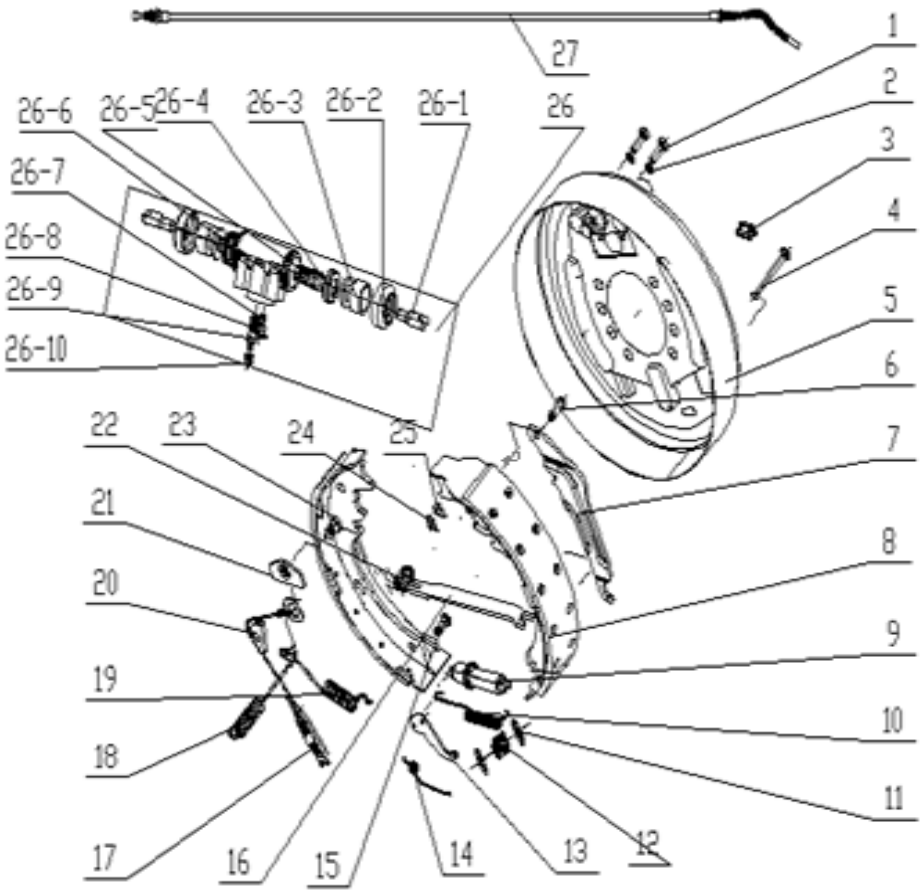

序号 Item No.		代号 Part No.	名称 Description	数量 Q'ty	备注 Remark
		REF00056TR	Wheel brake ass'y(right)	1	
1		GB5785-M8*16-6g	Bolt	2	
2	69000062	GB/T93-8	Washer	2	
3	69021300	24433-70040G	Rubber plug	1	
4		24433-70010G-TLF	Compressed spring rod	2	
5		FH31062-010R	Brake plate ass'y (right)	1	
6	69135243	22673-72231	Rod pin	1	
7		23653-72071G-R	Parking brake lever (right)	1	
8		FH31062-020	Brake shoe ass'y (right)	1	
9		24433-74000G-TLFR	Left slack adjuster assembly	1	
10	69008121	24433-70050G	Drag spring	1	
11	69135275	24433-70020G	Compressed spring	4	
12	69135276	24433-70030G	Drag spring	2	
13		24433-70100G-R	Left pawl	1	
14		24433-70090G-R	Left torsion spring	1	
15		24433-70110G	pin	1	
16	69024875	23653-72081	Right hand brake push rod	1	
17		24433-73000G-FH	Spring stay device	1	
18		FH31063NS-002R	Right return spring (rear)	1	
19		FH31063NS-001R	Right return spring (front)	1	
20		24433-70081G	Guide block	1	
21	69135277	24433-70060G	Guide plate	1	
22	69135237	23673-72391	Push rod spring	1	
23		FH31062-021R	Right brake shoe	1	
24	69135283	24433-70170G	Rod pin retaining ring	1	

图39/Fig39. 2-2.5t轮式制动器/2-2.5t WHEEL BRAKE

FD20/25T-AWE5、FD20/25T-AWV

FG(L)20/25T-AWA、FD20/25T-AG(1)

FGL20/25T-AWG

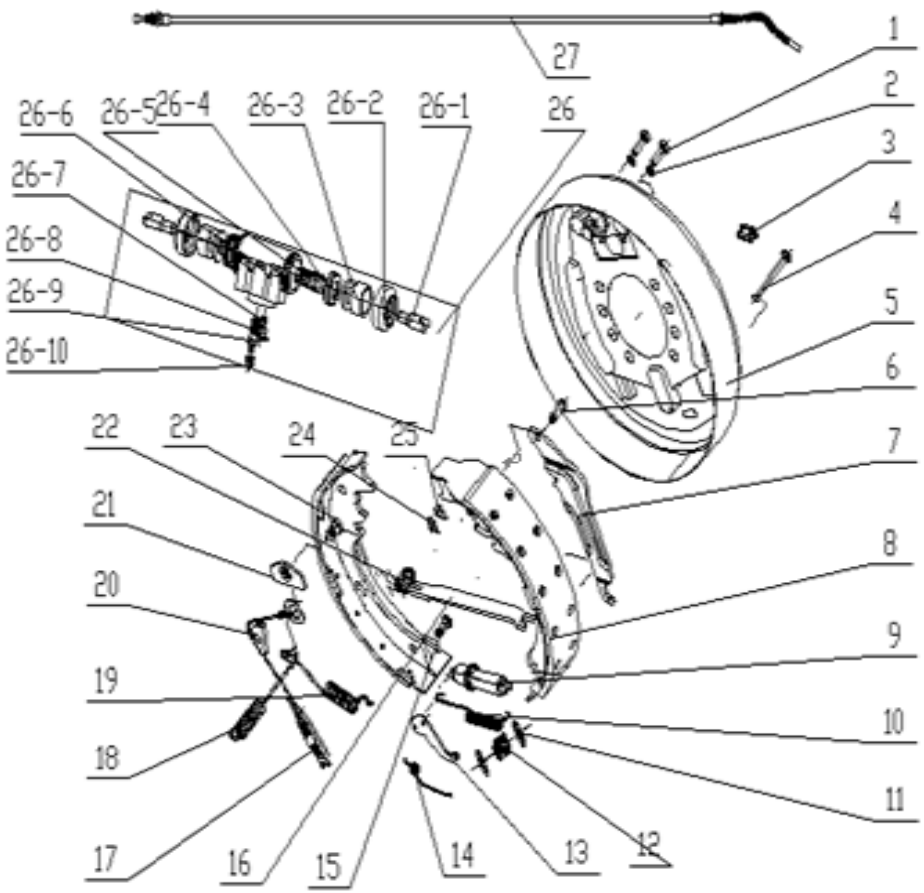

序号 Item No.		代号 Part No.	名称 Description	数量 Q' ty	备注 Remark
25	69135232	24433-70160G	Spring Washer	1	
26	69142800	22673-72041-R	Brake pump ass'y (Right)	1	
26-1	69142789	33673-72111	Cylinder piston rod	2	
26-2		33673-72101	Pump shield	2	
26-3	69135253	22673-72071	Pump piston	2	
26-4	69135254	22673-72081G	Pump bowl	2	
26-5	69135255	22673-72091	Sub pump spring	1	

图40/Fig40. 3-3.5t轮式制动器/3-3.5t WHEEL BRAKE

FD30/35T-AWE5、FD30/35T-AWV、FD30/35T-AGK

FG(L)30/35T-AWA、FD30/35T-AG(1)

FGL30/35T-AWG

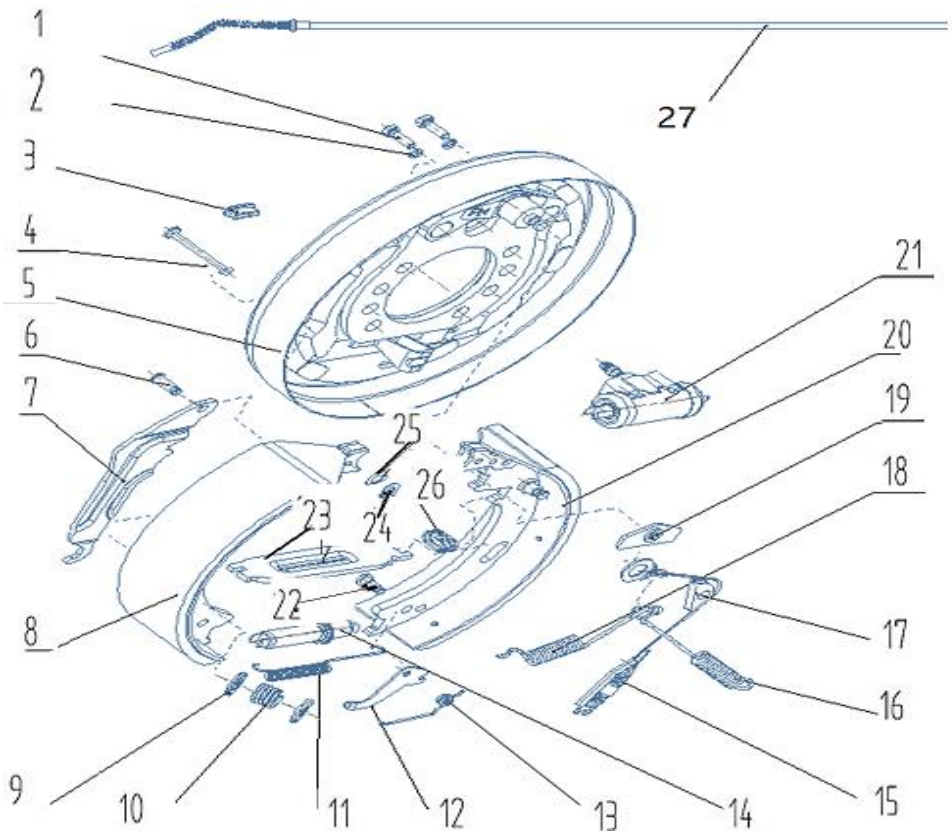

序号 Item No.		代号 Part No.	名称 Description	数量 Q' ty	备注 Remark
		24433-70411	Wheel brake ass'y (left)	1	
1		GB/T5785-M8*1.25*25-6g	Bolt	2	
2	69000062	GB/T93-8	Washer	2	
3	69021300	24433-70040G	Rubber plug	1	
4	69135274	24433-70010G	Compressed spring rod	2	
5	69136310	24433-72000G-L	Brake plate ass'y (left)	1	
6	69135282	24433-70150G	Rod pin	1	
7		24433-70140G-L	Parking brake lever (left)	1	
8		24433-71000G	Brake shoe ass'y	1	
9	69135275	24433-70020G	Compressed spring seat	1	
10	69135276	24433-70030G	Compressed spring	1	
11	69008121	24433-70050G	Drag spring	1	
12		24433-70100G-L	Left pawl	1	
13		24433-70090G-L	Left torsion spring	1	
14		24433-74000G-L	Left slack adjuster assembly	1	
15	69008118	24433-73000G	Spring stay device	1	
16		24433-70071G-L	Left return spring (rear)	1	
17		24433-70081G	Guide block	1	
18		24433-70070G-L	Left return spring (front)	1	
19	69135277	24433-70060G	Guide plate	1	
20		24433-71001G-L	Left brake shoe	1	
21	69135263	24433-76000G	Brake pump ass'y	1	
22		24433-70110G	Pull spring pin	1	
23	69135280	24433-70120G-L	Left hand brake push rod	1	
24	69135283	24433-70170G	Rod pin retaining ring	1	

图40/Fig40. 3-3.5t轮式制动器/3-3.5t WHEEL BRAKE

FD30/35T-AWE5、FD30/35T-AWV、FD30/35T-AGK

FG(L)30/35T-AWA、FD30/35T-AG(1)

FGL30/35T-AWG

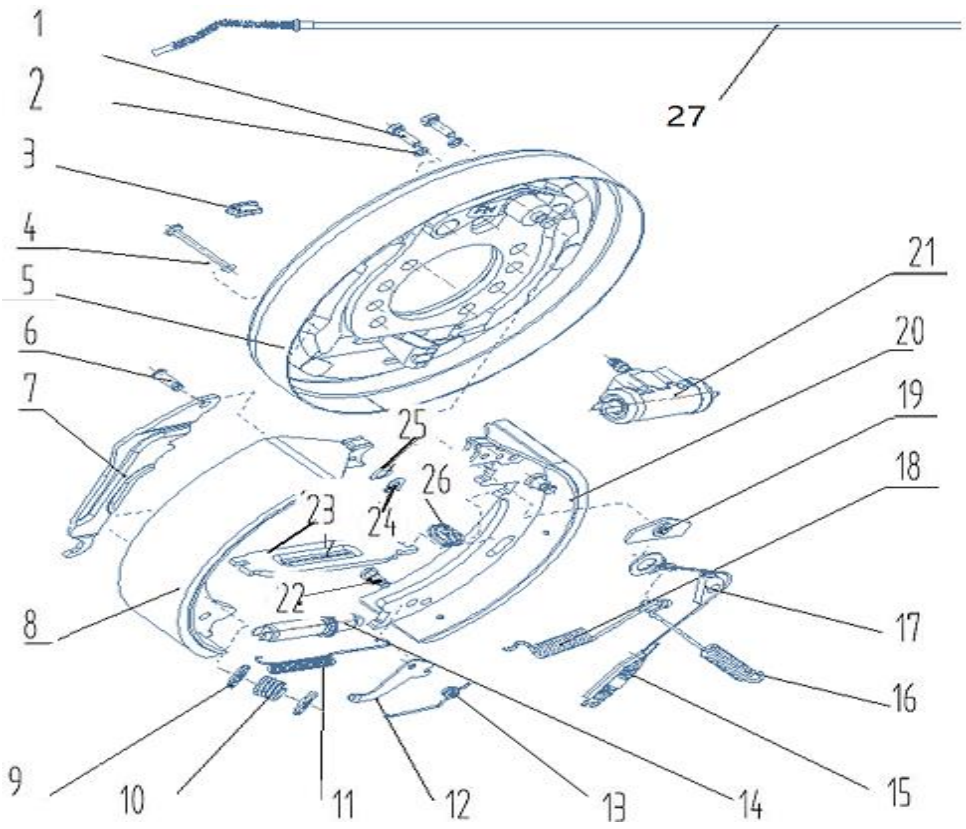

序号 Item No.		代号 Part No.	名称 Description	数量 Q' ty	备注 Remark
25	69135232	24433-70160G	Spring Washer	1	
26	69024840	24433-70130G	Spring	1	
27	69006655	0C11246-14603-30EX	Parking brake cable(left)	1	

图40/Fig40. 3-3.5t轮式制动器/3-3.5t WHEEL BRAKE

FD30/35T-AWE5、FD30/35T-AWV、FD30/35T-AGK

FG(L)30/35T-AWA、FD30/35T-AG(1)

FGL30/35T-AWG

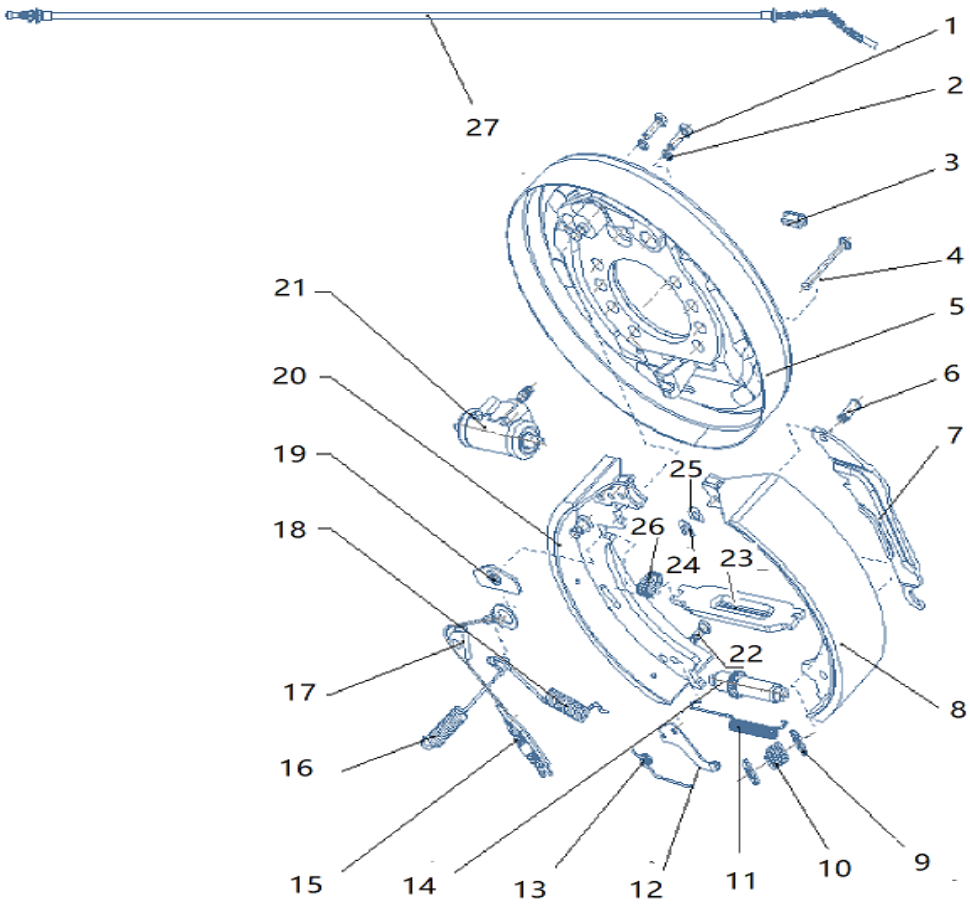

序号 Item No.		代号 Part No.	名称 Description	数量 Q' ty	备注 Remark
	69135227	Q03B1-1790R	Wheel brake ass'y (right)	1	
1		GB/T5785-M8*1.25*25-6g	Bolt	2	
2	69000062	GB/T93-8	Washer	2	
3	69021300	24433-70040G	Rubber plug	1	
4	69135274	24433-70010G	Compressed spring rod	2	
5	69136311	24433-72000G-R	Brake plate ass'y (right)	1	
6	69135282	24433-70150G	Rod pin	1	
7		24433-70140G-R	Parking brake lever (right)	1	
8		24433-71000G	Brake shoe ass'y	1	
9	69135275	24433-70020G	Compressed spring seat	4	
10	69135276	24433-70030G	Compressed spring	2	
11	69008121	24433-70050G	Drag spring	1	
12		24433-70100G-R	right pawl	1	
13		24433-70090G-R	right torsion spring	1	
14		24433-74000G-R	right slack adjuster assembly	1	
15	69008118	24433-73000G	Spring stay device	1	
16		24433-70071G-R	right return spring (rear)	1	
17		24433-70081G	Guide block	1	
18		24433-70070G-R	right return spring (front)	1	
19	69135277	24433-70060G	Guide plate	1	
20		24433-71001G-R	right brake shoe	1	
21	69135263	24433-76000G	Brake pump ass'y	1	
22		24433-70110G	Pull spring pin	1	
23		24433-70120G-R	right hand brake push rod	1	
24	69135283	24433-70170G	Rod pin retaining ring	1	

图40/Fig40. 3-3.5t轮式制动器/3-3.5t WHEEL BRAKE

FD30/35T-AWE5、FD30/35T-AWV、FD30/35T-AGK

FG(L)30/35T-AWA、FD30/35T-AG(1)

FGL30/35T-AWG

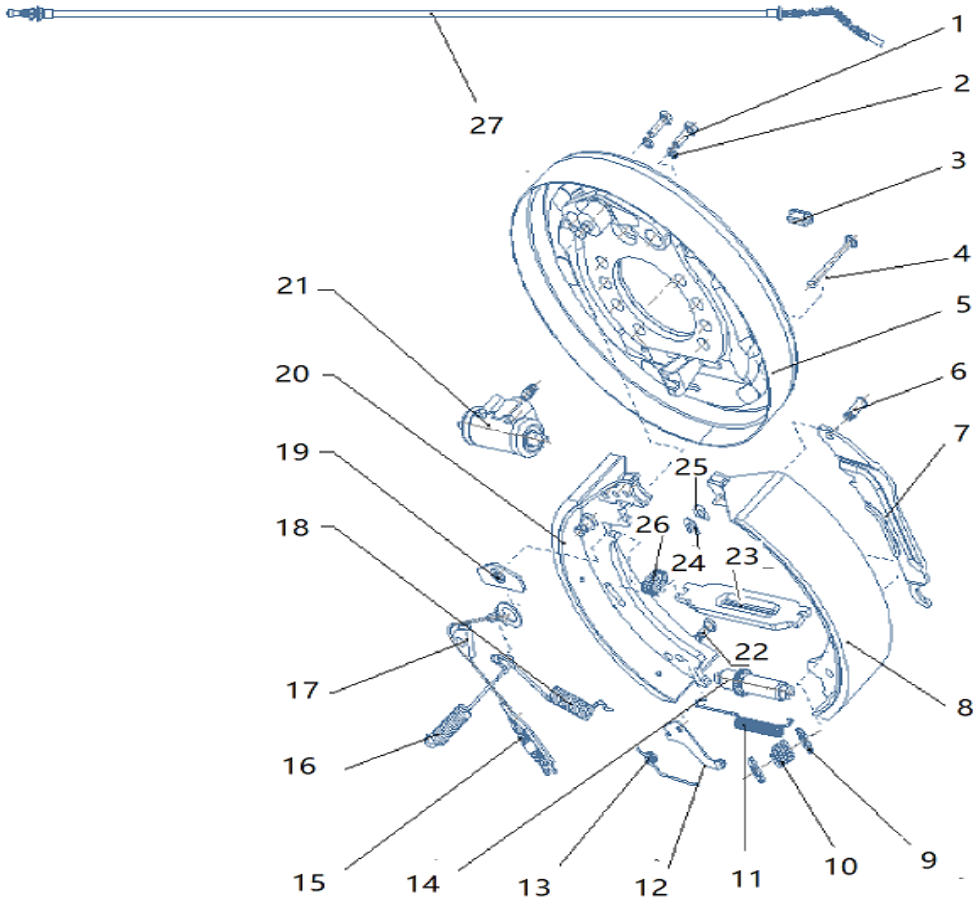

序号 Item No.		代号 Part No.	名称 Description	数量 Q' ty	备注 Remark
25	69135232	24433-70160G	Spring Washer	1	
26	69024840	24433-70130G	Spring	1	
27	69006656	0C11246-24603-30EX	Parking brake cable(right)	1	

图41/Fig41. 转向装置及安装/STEERING SYSTEM

FD20/25/30/35T-AWE5、FD20/25/30/35T-AWV、FD20/25/30/35T-AGK

FG(L)20/25/30/35T-AWA、FD20/25/30/35T-AG(1)

FGL20/25/30/35T-AWG

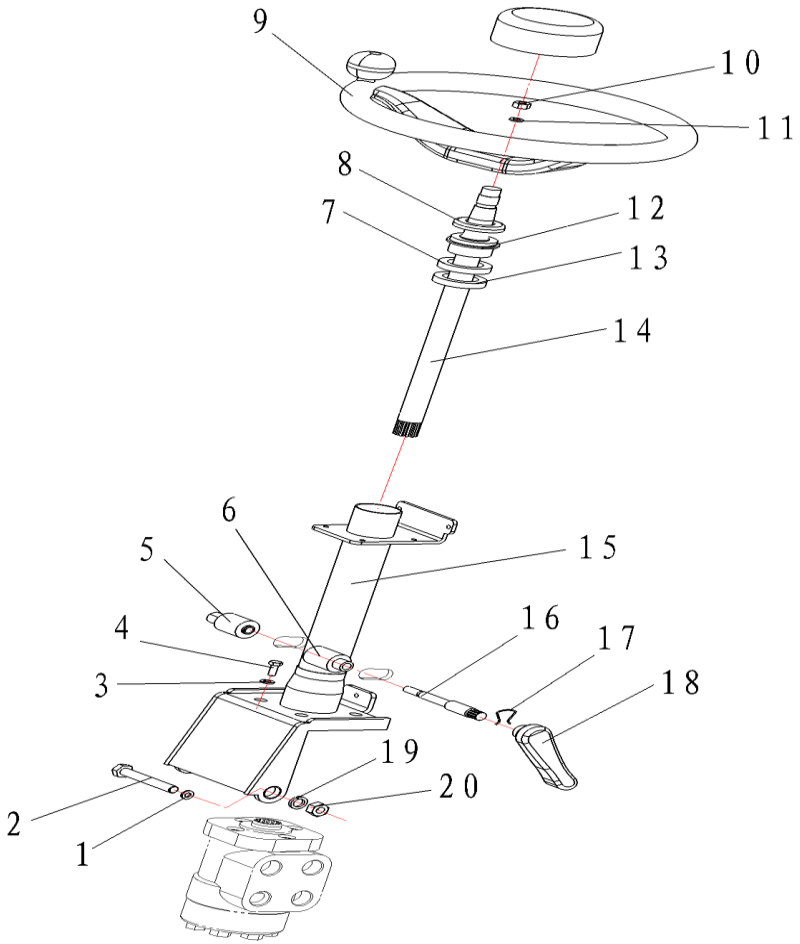

序号 Item No.		代号 Part No.	名称 Description	数量 Q' ty	备注 Remark
A		-	Steering system	1	
01	69034297	A30442-00006	Bolt	2	
02	69034296	A30442-00005	Bushing	2	
03	69000053	GB/T93-10	Washer 10	4	
04	69000123	GB/T5783-M10*20-8.8J	Bolt M10×20	4	
05	69034295	A30442-00004	Block	1	
06	69034292	A30442-00001	Cushion	1	
07	69000066	GB/T894.1-Φ20	Axial circlip 20	1	
08		A30442-01000-1	Cap	1	
09	69001646	M2034201000	Steering wheel ass'y Φ300	1	
10	69003072	GB/T6173-M16*1.5-8J	Nut M16×1.5	1	
11	69000258	GB/T97.1-6	Washer 16	1	
12	69039264	A30442-01002	Nylon Bushing	1	
13	69136720	GB/T276-1994-61904	Bearing 61904	1	
14	69040853	A30442-01001	Steering shaft	1	
15	69042738	A30442-01100	Column	1	
16	69034293	A30442-00002	Shaft	1	
17	69034294	A30442-00003	Clip	1	
18		A30442-02000A	Lock handle	1	
19	69000054	GB/T93-12	Washer 12	2	
20	69020188	GB/T6170-M12	Nut M12	2	

图42/FIG42. 2-2.5t转向桥及安装/2-2.5t STEERING AXLE MOUNT

FD20/25T-AWE5、FD20/25T-AWV

FG(L)20/25T-AWA、FD20/25T-AG(1)

FGL20/25T-AWG

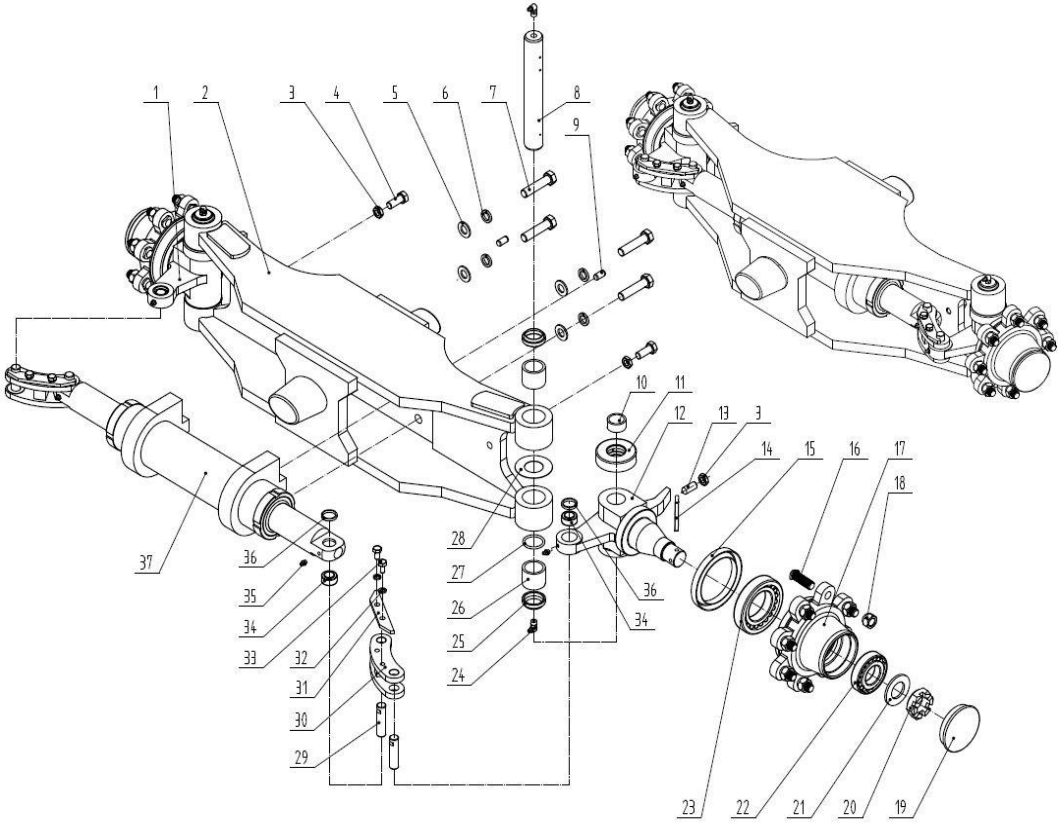

序号 Item No.		代号 Part No.	名称 Description	数量 Q' ty	备注 Remark
01	69135287	H24C4-32171	Knuckle ass'y(left)	1	
02	69135288	H95C4-30301	Steering axle body	1	
03		B4313-00012B	Nut M12	2	
04	69135290	B0330-12040B	Bolt M12×40	2	
05	69135291	B5313-00014	Washer 14	4	
06	69135292	B5050-00014B	Washer 14	4	
07	69135293	B0330-14045B	Bolt M14×45	4	
08	69135294	A21B4-32222	Kuckle master pin B10×20	2	
09	69130896	B3130-10020	Pin 10×20	2	
10	69003540	A21B4-12001	Bushing	2	
11	69135295	Z-198908K	One-way thrust ball bearing 198908K	2	
12	69135296	H24C4-32181	Knuckle ass'y(right)	1	
13	69135297	B8050-12030B	Tighening screw M12x30	2	
14	69130894	B3010-6P350	Pin 6.3×50	2	
15	69100640	Z6301-08524	Oil seal B85x110x12D	2	
16	69135298	23654-32041B	Hub bolt	16	
17	69005334	A21B4-32241	Hub	2	
18	69130891	23654-34051B	Hub nut	16	
19	69135299	1218-10200	Hub cap	2	
20	69005337	A21B4-32311	Nut M30x2	2	
21	69135300	G27Z4-20711	Washer 30	2	
22	69135301	Z-30207	Bearing30207	2	
23	69135302	Z-30211	Bearing30211	2	
24	69135303	Q701B90	90° Grease nipple Z1/8	4	
25	69003338	23654-32081	Oil seal	4	

图42/FIG42. 2-2.5t转向桥及安装/2-2.5t STEERING AXLE MOUNT

FD20/25T-AWE5、FD20/25T-AWV

FG(L)20/25T-AWA、FD20/25T-AG(1)

FGL20/25T-AWG

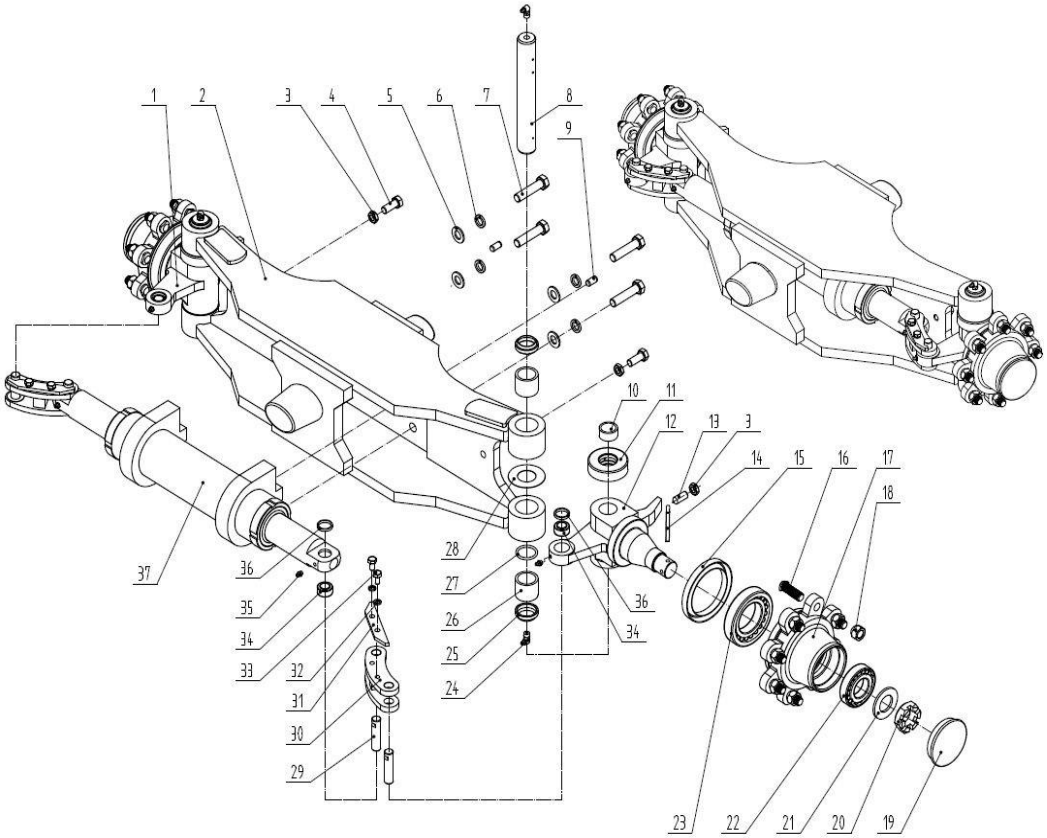

序号 Item No.		代号 Part No.	名称 Description	数量 Q'ty	备注 Remark
26	69135304	Z-943/32	Needle bearing φ32xφ40x32	4	
27	69135305	23654-32161	O-ring	2	
28	69135306	22214-30321	Steering knuckle adjusting washer	2	
29	69135307	A21B4-32261AB	Pin	4	
30	69135308	A21B4-32081B	Linking rod	2	
31	69135309	A21B4-32300B	Baffle	2	
32	69135310	B5050-00008B	Washer 8	4	
33	69135311	B0330-08016B	Bolt M8×16	4	
34	69135312	Z-GE16ES	Oscillating knuckle bearing GE16ES	4	
35	69135313	Q700B06	Straight-through nipple M6	4	
36	69135314	H24C4-12003	Bushing	4	
37	69135315	H24C4-50402CQ	Steering cylinder ass'y	1	

图43/FIG43. 3-3.5t转向桥及安装/3-3.5t STEERING AXLE MOUNT

FD30/35T-AWE5、FD30/35T-AWV、FD30/35T-AGK

FG(L)30/35T-AWA、FD30/35T-AG(1)

FGL30/35T-AWG

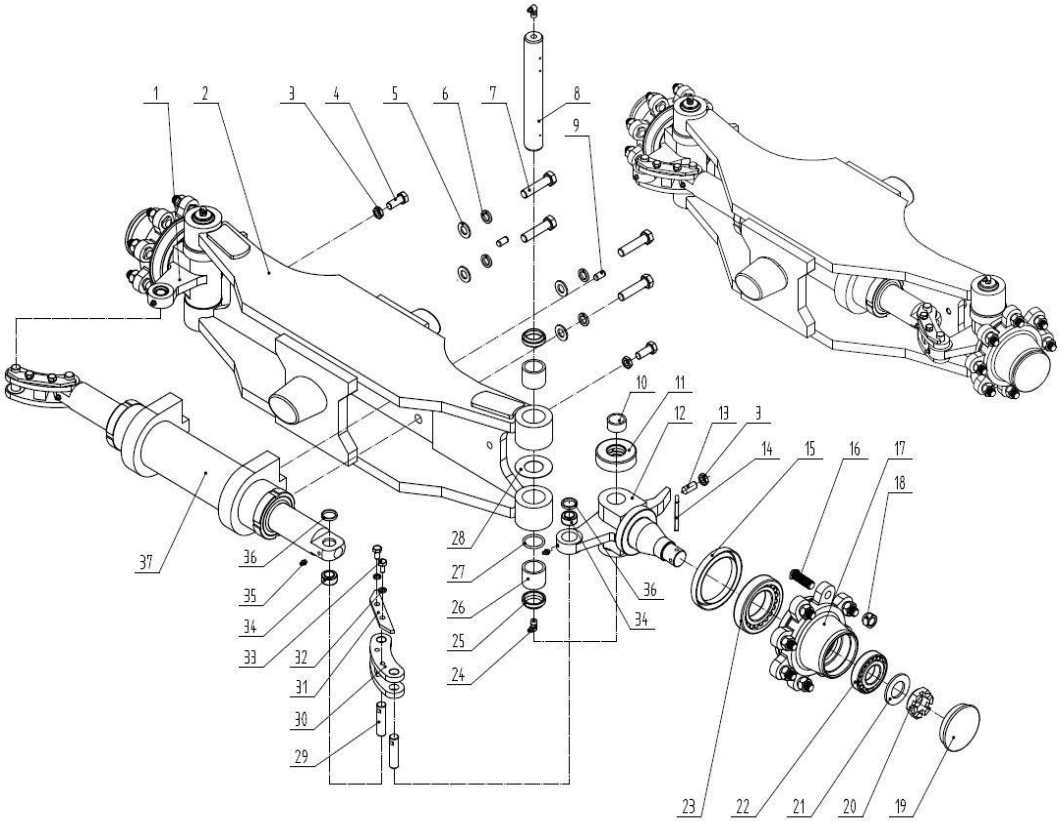

序号 Item No.		代号 Part No.	名称 Description	数量 Q' ty	备注 Remark
01	69135287	H24C4-32171	Knuckle ass'y (left)	1	
02	69135317	H24N4-30302	Steering axle body ass'y	1	
03		B4313-00012B	Nut M12	2	
04	69135290	B0330-12040B	Bolt M12×40	2	
05	69135291	B5313-00014	Washer 14	4	
06	69135292	B5050-00014B	Washer 14	4	
07	69135293	B0330-14045B	Bolt M14×45	4	
08	69135294	A21B4-32222	Knuckle master pin	2	
09	69130896	B3130-10020	Pin B10×20	2	
10	69003540	A21B4-12001	Bushing	2	
11	69135295	Z-198908K	Thrust bearing 198908K	2	
12	69135296	H24C4-32181	Knuckle ass'y (right)	1	
13	69135297	B8050-12030B	Screw M12×30	2	
14	69130895	B3010-6P360	Pin 6.3×60	2	
15	69100640	Z6301-08524	Oil seal B 85×110×12D	2	
16	69135298	23654-32041B	Hub bolt	16	
17	69005334	A21B4-32241	Hub	2	
18	69130891	23654-34051B	Hub Nut	16	
19	69135299	1218-10200	Hub cap	2	
20	69005337	A21B4-32311	Nut M30×2	2	
21	69135300	G27Z4-20711	Washer 30	2	
22	69135301	Z-30207	Bearing 30207	2	
23	69135302	Z-30211	Bearing 30211	2	
24	69135303	Q701B90	90° Grease nipple Z1/8	4	
25	69003338	23654-32081	Oil seal	4	

FD30/35T-AWE5、FD30/35T-AWV、FD30/35T-AGK

FG(L)30/35T-AWA、FD30/35T-AG(1)

FGL30/35T-AWG

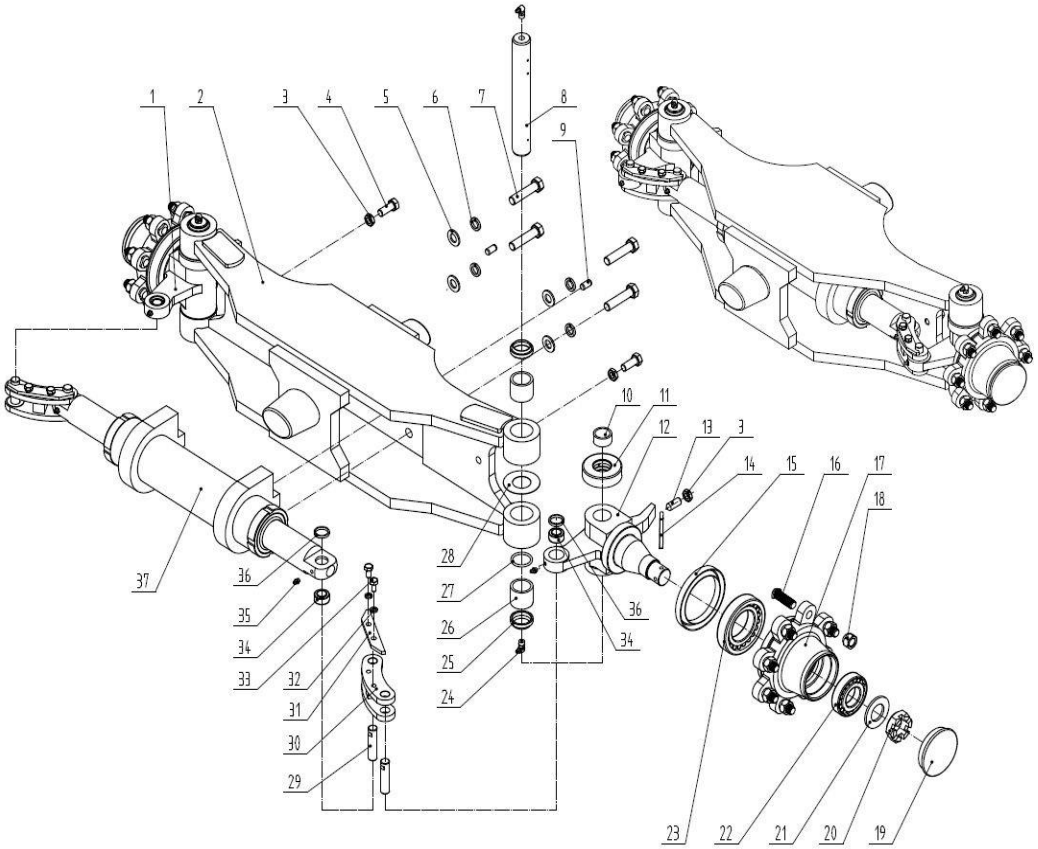

序号 Item No.		代号 Part No.	名称 Description	数量 Q' ty	备注 Remark
26	69135304	Z-943/32	Needle bearing φ32×φ40×32	4	
27	69135305	23654-32161	O-ring	2	
28	69135306	22214-30321	Knuckle adjusting shim	2	
29	69135307	A21B4-32261AB	Link pin	4	
30	69135308	A21B4-32081B	Link	2	
31	69135309	A21B4-32300B	Baffle	2	
32	69135310	B5050-00008B	Washer 8	4	
33	69135311	B0330-08016B	Bolt M8×16	4	
34	69135312	Z-GE16ES	Oscillating bearing GE16ES	4	
35	69135313	Q700B06	Straight-through nipple	4	
36	69135314	H24C4-12003	Bushing	4	
37	69135315	H24C4-50402CQ	Steering cylinder ass'y	1	

图44/Fig44. 后轮总成/REAR WHEEL ASS'Y

FD20/25/30/35T-AWE5、FD20/25/30/35T-AWV、FD20/25/30/35T-AGK

FG(L)20/25/30/35T-AWA、FD20/25/30/35T-AG(1)

FGL20/25/30/35T-AWG

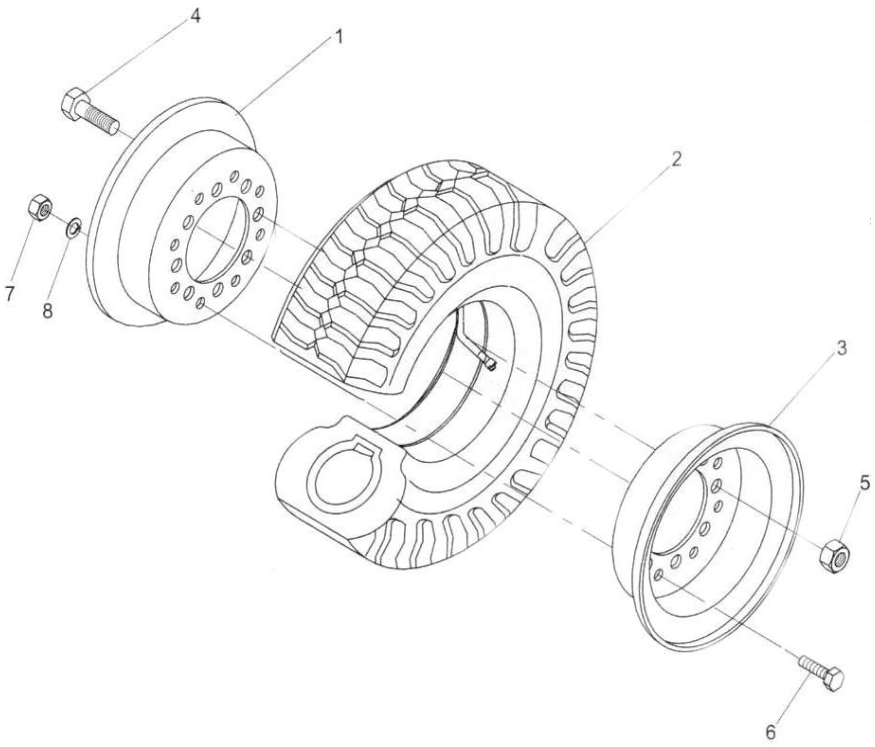

序号 Item No.		代号 Part No.	名称 Description	数量 Q'ty	备注 Remark
A		-	Rear wheel ass'y	2	
01	69136164	M2034402002	Rim, inside(4.00E-9)	2	2-2.5t
-	69136721	M3034402002	Rim ,inside(5.00F-10)	2	3-3.5t
02	69067579	M2034401000-1-Q	Tire(6.00-9-10PR)	2	2-2.5t
-	69067581	M3034401000-1-Q	Tire(6.50-10-10PR)	2	3-3.5t
03	69136165	M2034402001	Rim, outside(4.00E-9)	2	2-2.5t
-	69136722	M3034402001	Rim ,outside(5.00F-10)	2	3-3.5t
04	69130890	23654-32041	Hub Bolt M14×45	16	
05	69138537	23654-34051	Hub Nut M14	16	
06	69006035	M3034400001	Rim bolt	16	
07	69020188	GB/T6170-M12	Nut M12	16	
08	69000054	GB/T93-12	Washer 12	16	

图45/Fig45. 转向油缸/STEERING CYLINDER

FD20/25/30/35T-AWE5、FD20/25/30/35T-AWV、FD20/25/30/35T-AGK

FG(L)20/25/30/35T-AWA、FD20/25/30/35T-AG(1)

FGL20/25/30/35T-AWG

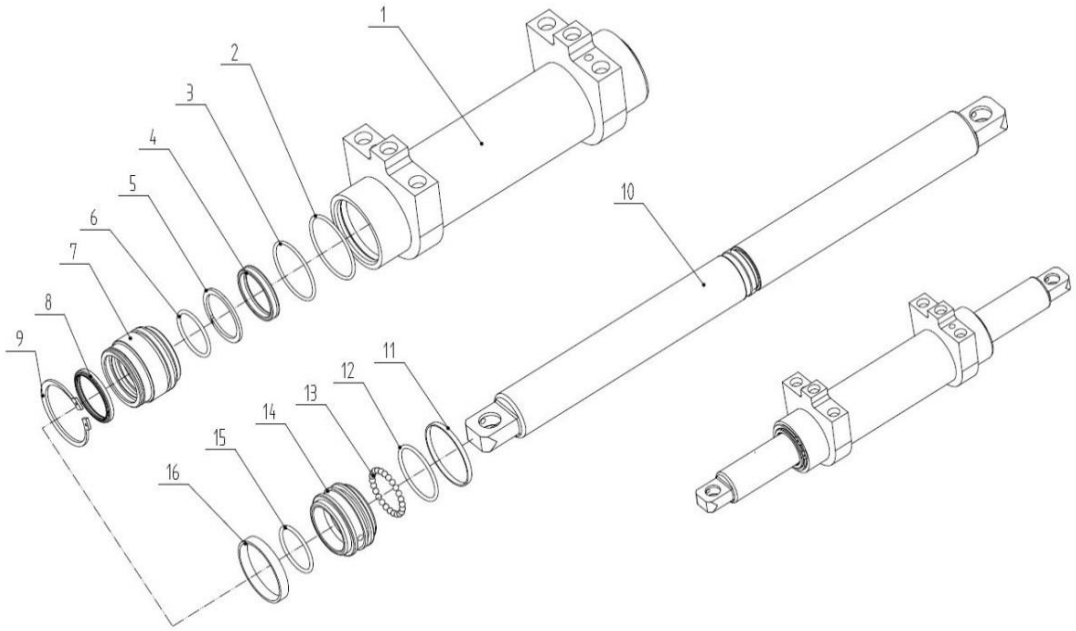

序号 Item No.		代号 Part No.	名称 Description	数量 Q' ty	备注 Remark
A		-	Steering cylinder ass'y	1	
01	69136723	H24C4-52142SA	Steering body ass'y	1	
02	69130899	H24C4-52002S	Snap ring	2	
03	69130906	Z6003-07003	O-ring 70×3.1	2	
04	69136219	RUJ000500-Z20	Seal ring 50×60×6	2	
05	69127786	22658-52301	Snap ring 50×60×3	2	
06	69130907	Z6053-04973	O-ring 49.7×3.55	2	
07	69136157	H24C4-52003S	Horizontal cylinder cap	2	
08	69136218	WDJ200500-Z201	Dust-proof seal 50×58×5/6.5	2	
09	69130897	B6152-00065	Axis circlip 65	2	
10	69136724	H24C4-52153SA	Piston rod 50×681	1	
11	69130901	H24C4-53171	bearing ring	1	
12	69130908	Z6053-06003	O-ring 60×3.55	1	
13	69136156	Z1505-00060	Steel ball 6	26	
14	69136155	H24C4-52163SA	Piston/69.7×40	1	
15	69130905	Z6003-05004	O-ring 50×3.5	1	
16	69129765	H24C4-53001S	Bearing ring 70×10×2.5	1	

图46/Fig46. 油门操纵/ACCELERATOR PEDAL

FD20/25/30/35T-AWE5、FD20/25/30/35T-AGK

FD20/25/30/35T-AWV

FG(L)20/25/30/35T-AWA

FD20/25/30/35T-AG(1)

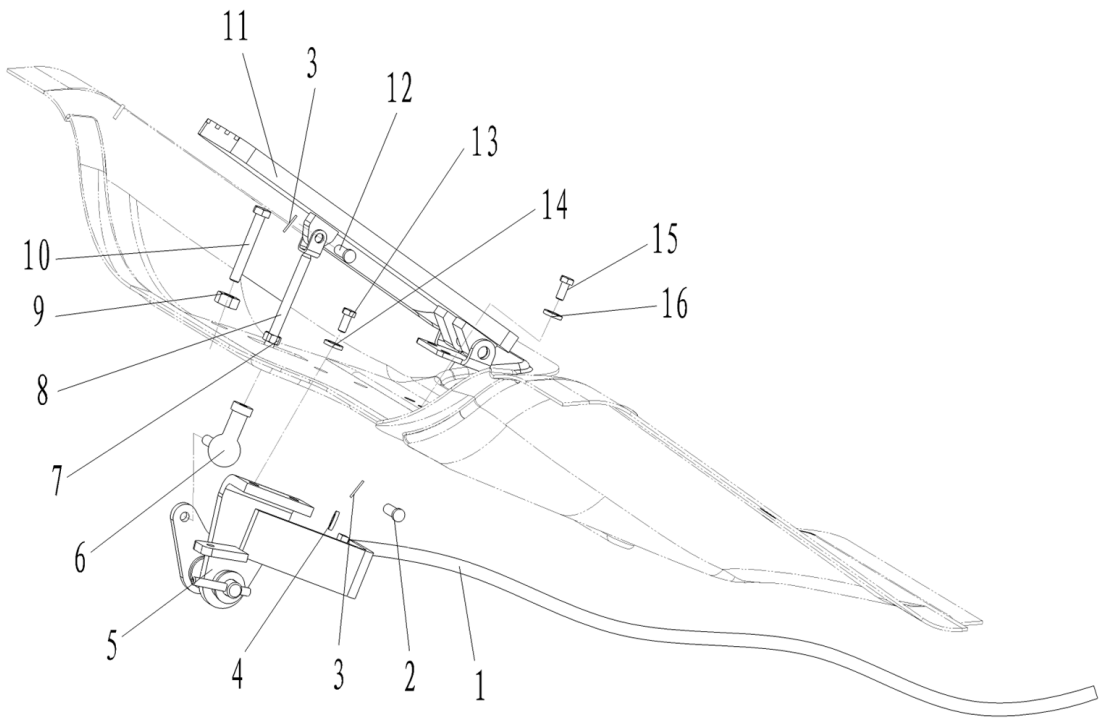

序号 Item No.		代号 Part No.	名称 Description	数量 Q' ty	备注 Remark
A		-	Accelerator ASS'Y	1	
01	69001942	M30452I02000	Accelerator cable	1	YANMAR98、XINCHAI、DACHAI
-	69095852	M30252N01000A	Accelerator cable	1	NISSAN K25、MITSUBISHI S4S
02	69039525	GB/T882-Φ6*12	Pin B 6×12	2	YANMAR98、XINCHAI、DACHAI
-	69039525	GB/T882-Φ6*12	Pin B 6×12	1	NISSAN K25、MITSUBISHI S4S
03	69005787	GB/T91-2*16	Cotter Pin 2×16	3	YANMAR98、XINCHAI、DACHAI
-	69005787	GB/T91-2*16	Cotter Pin 2×16	2	NISSAN K25、MITSUBISHI S4S
04	69000258	GB/T97.1-6	Washer 6	2	YANMAR98、XINCHAI、DACHAI
-	69000258	GB/T97.1-6	Washer 6	1	NISSAN K25、MITSUBISHI S4S
05	69034284	A30452-02000	Accelerator bracket ass'y	1	
06	69039527	JB5306-1991	Oscillating bearing	1	SQ6C-RSM6-6H
07	69000111	GB/T6170-M6-8J	Nut M6	1	
08	69034283	A30452-01000	Link	1	
09	69000103	GB/T6170-M10-8J	Nut M10	1	
10	69018334	GB/T5782-M10*70-8.8J	Bolt M10×70	1	
11	69034285	A30452-03000A	Accelerateor pedal	1	
12	69039526	GB/T882-Φ6*18	Pin B 6×18	1	
13	69000309	GB/T5783-M8*16-8.8J	Bolt M8×16	2	
14	69000062	GB/T93-8	Washer 8	2	
15	69000189	GB/T5783-M6*12-8.8J	Bolt M6×12	2	
16	69000060	GB/T93-6	Washer 6	2	

图47/Fig47. 油门操纵/ACCELERATOR PEDAL

FGL20/25/30/35T-AWG

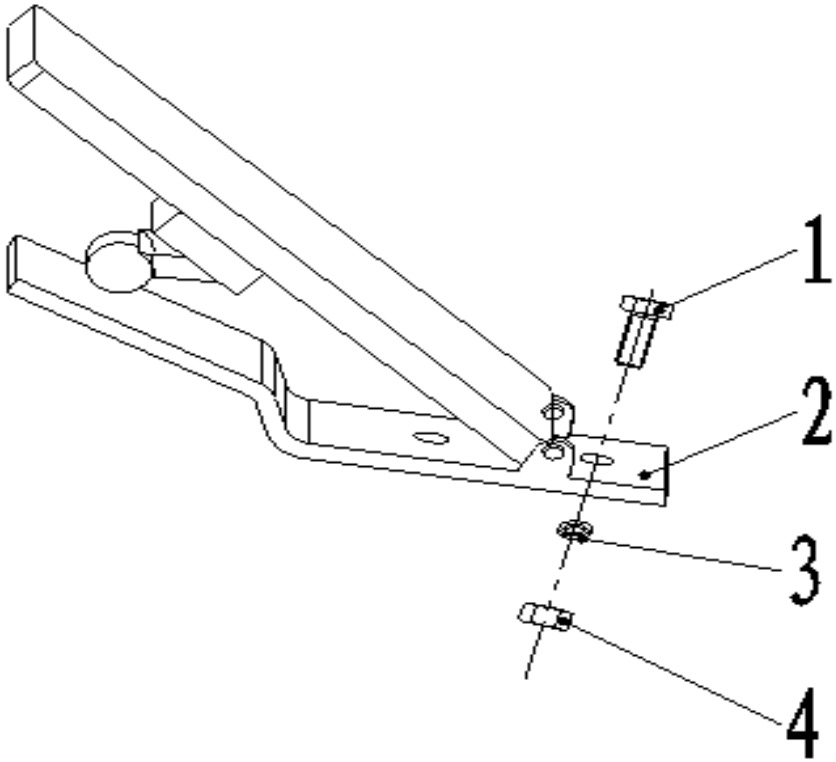

序号 Item No.		代号 Part No.	名称 Description	数量 Q' ty	备注 Remark
A		-	Accelerator ASS'Y	1	AEROSPACE MITSUBISHI 4G64
1	69000198	GB/T5783-M8*20-8.8J	Bolt M8×20	3	
2	69063589	A30452SY01000	Electronic accelerator	1	
3	69000062	GB/T93-8	Washer 8	3	
4	69000112	GB/T6170-M8-8J	Nut M8	3	

图48/Fig48. 制动微动操纵(液力式)/BRAKE & INCH CONTROL(TOR-CON TYPE)

FD20/25/30/35T-AWE5、FD20/25/30/35T-AWV

FG(L)20/25/30/35T-AWA、FGL20/25/30/35T-AWG

FD20/25/30/35T-AGK

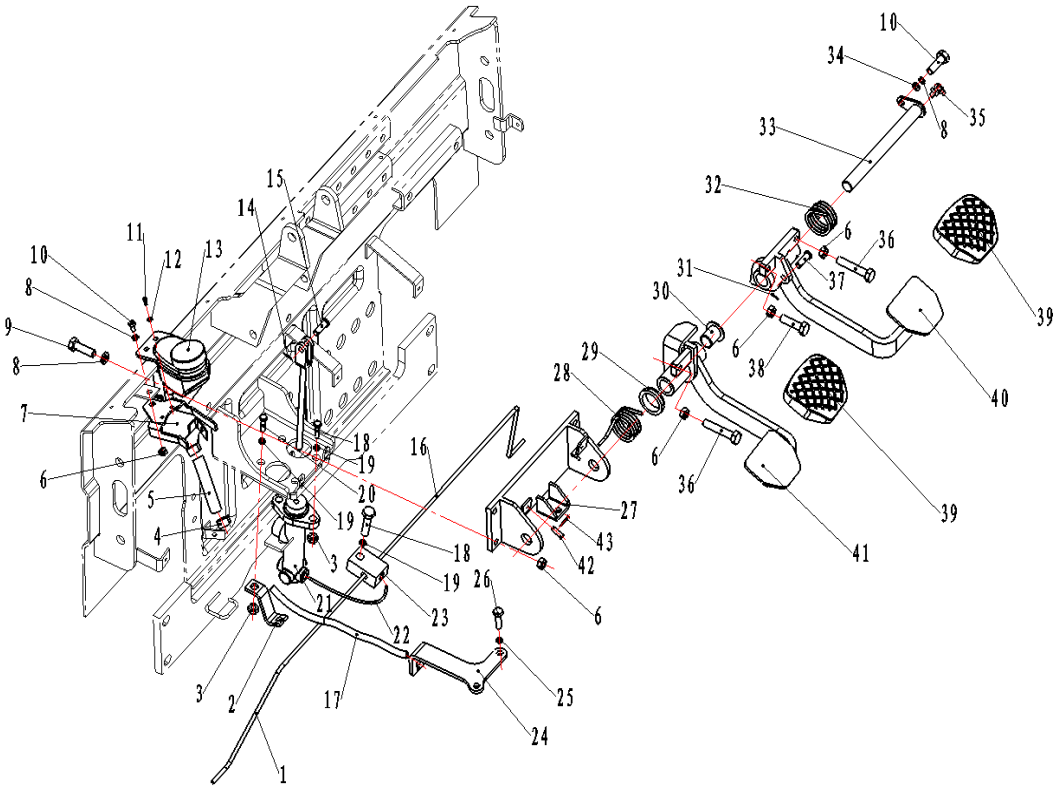

序号 Item No.		代号 Part No.	名称 Description	数量 Q' ty	备注 Remark
01	69039551	A20458-01000	Brake pipe ass'y	1	2-2.5t
-	69036228	A30458-06000	Brake pipe ass'y	1	3-3.5t
02	69036877	A30458-00002	Bracket	1	
03	69000103	GB/T6170-M10-8J	Nut M10	3	
04	69042429	JB/T8870-12-20	Hose clamp d20	2	
05	69000653	M3035400001	Hose Φ9×4-700	1	
06	69000112	GB/T6170-M8-8J	Nut M8	8	
07	69036223	A30458-00001	Brake fluid tank bracket	1	
08	69000062	GB/T93-8	Washer 8	6	
09	69000200	GB/T5783-M8*25-8.8J	Bolt M8×25	4	
10	69000309	GB/T5783-M8*16-8.8J	Bolt M8×16	2	
11	69000189	GB/T5783-M6*12-8.8J	Bolt M6×12	2	
12	69000060	GB/T93-6	Washer 6	2	
13	69036224	A30458-02000	Oil storage tank	1	
14	69109605	GB/T91-2000	Cotter pin 3×20	1	
15	69008457	GB/T882-Φ8*26	Pin shaft B8×26	1	
16	69039552	A20458-02000	Brake pipe ass'y	1	2-2.5t
-	69036229	A30458-07000	Brake pipe ass'y	1	3-3.5t
17	69036222	A30458-03000	Inch cable	1	
18	69000128	GB/T5783-M10*30-8.8J	Bolt M10×30	3	
19	69000053	GB/T93-10	Washer 10	4	
20	69000123	GB/T5783-M10*20-8.8J	Bolt M10×20	1	
21	69036225	A30458-04000	Master brake pump ass'y	1	
22	69036227	A30458-05000	Brake hose ass'y	1	
23	69006858	M6046000001	Tee connector	1	

图48/Fig48. 制动微动操纵(液力式)/BRAKE & INCH CONTROL(TOR-CON TYPE)

FD20/25/30/35T-AWE5、FD20/25/30/35T-AWV

FG(L)20/25/30/35T-AWA、FGL20/25/30/35T-AWG

FD20/25/30/35T-AGK

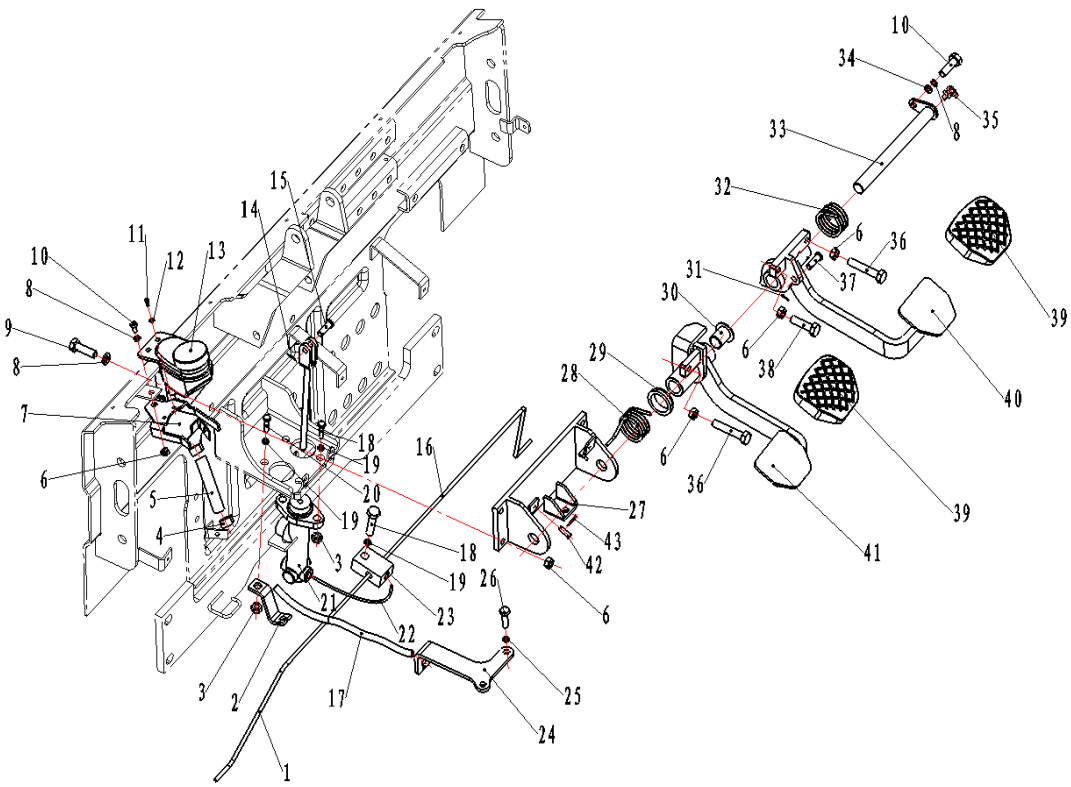

序号 Item No.		代号 Part No.	名称 Description	数量 Q' ty	备注 Remark
24	69036226	A30458-00003	Bracket	1	
25	69000250	GB/T97.1-10	Washer 10	4	
26	69018334	GB/T5782-M10*70-8.8J	Bolt M10×70	2	
27		A30458-01100	Bracket	1	
28	69036270	A30458-01001	Torsional spring	1	
29		A30458-01002	Washer	1	
30		A30458-01003	Bushing	4	
31	69109605	GB/T91-2000	Cotter pin 2×16	2	
32	69036902	A30458-01004	Torsional spring	1	
33		A30458-01400	Pin	1	
34	69000259	GB/T97.1-8	Washer 8	1	
35	69136358	JB/T7940.2-1995	Nipple	1	
36	69000217	GB/T5783-M8*55-8.8J	Bolt M8×55	2	
37	69007191	GB/T882-Φ6*20	Pin B6×20	2	
38	69000311	GB/T5783-M8*35-8.8J	Bolt M8×35	1	
39	69039265	A30458-01005	Pedal cover	2	
40		A30458-01200	Brake pedal	1	
41		A30458-01300	Inch pedal	1	
42	69021756	M3035402003	Adjusting shaft	2	
43	69109605	GB/T91-2000	Cotter pin 2x25	2	

图49/Fig49. 制动微动操纵(液力式)/BRAKE & INCH CONTROL(TOR-CON TYPE)

FD20/25/30/35T-AG(1)

FD30/35T-AG(5)

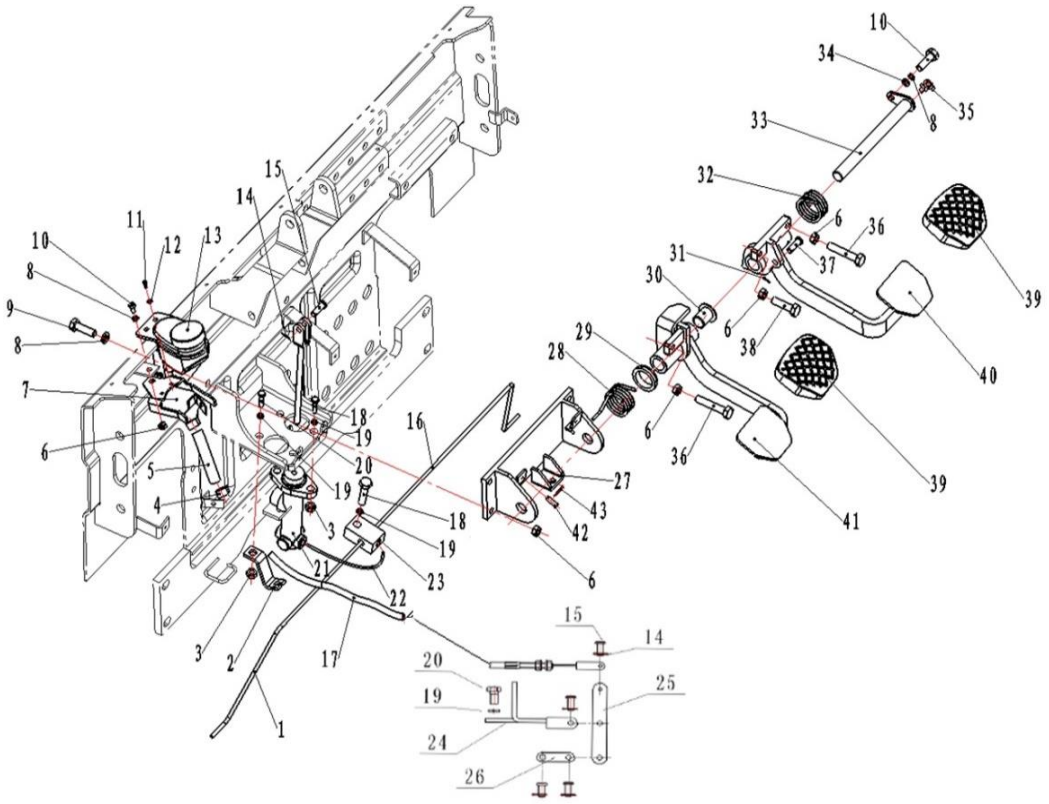

序号 Item No.		代号 Part No.	名称 Description	数量 Q' ty	备注 Remark
01	69039551	A20458-01000	Brake pipe ass'y	1	2-2.5t
-	69036228	A30458-06000	Brake pipe ass'y	1	3-3.5t
02	69036877	A30458-00002	Bracket	1	
03	69000103	GB/T6170-M10-8J	Nut M10	3	
04	69036894	JB/T8870-16-25	Hose clamp d20	2	
05	69000653	M3035400001	Hose Φ9×4-700	1	
06	69000112	GB/T6170-M8-8J	Nut M8	8	
07	69036223	A30458-00001	Brake fluid tank bracket	1	
08	69000062	GB/T93-8	Washer 8	6	
09	69000200	GB/T5783-M8*25-8.8J	Bolt M8×25	4	
10	69000309	GB/T5783-M8*16-8.8J	Bolt M8×16	2	
11	69000189	GB/T5783-M6*12-8.8J	Bolt M6×12	2	
12	69000060	GB/T93-6	Washer 6	2	
13	69036224	A30458-02000	Brake oil pot	1	
14	69109605	GB/T91-2000	Cotter pin 3×20	5	
15	69008457	GB/T882-Φ8*26	Pin shaft B8×26	5	
16	69039552	A20458-02000	Brake pipe ass'y	1	2-2.5t
-	69036229	A30458-07000	Brake pipe ass'y	1	3-3.5t
17	69036222	A30458-03000	Inch cable	1	
18	69000128	GB/T5783-M10*30-8.8J	Bolt M10×30	3	
19	69000053	GB/T93-10	Washer 10	6	
20	69000123	GB/T5783-M10*20-8.8J	Bolt M10×20	3	
21	69036225	A30458-04000	Master brake pump ass'y	1	
22	69036227	A30458-05000	Brake hose ass'y	1	
23	69006858	M6046000001	Tee connector	1	

图49/Fig49. 制动微动操纵(液力式)/BRAKE & INCH CONTROL(TOR-CON TYPE)

FD20/25/30/35T-AG(1)

FD30/35T-AG(5)

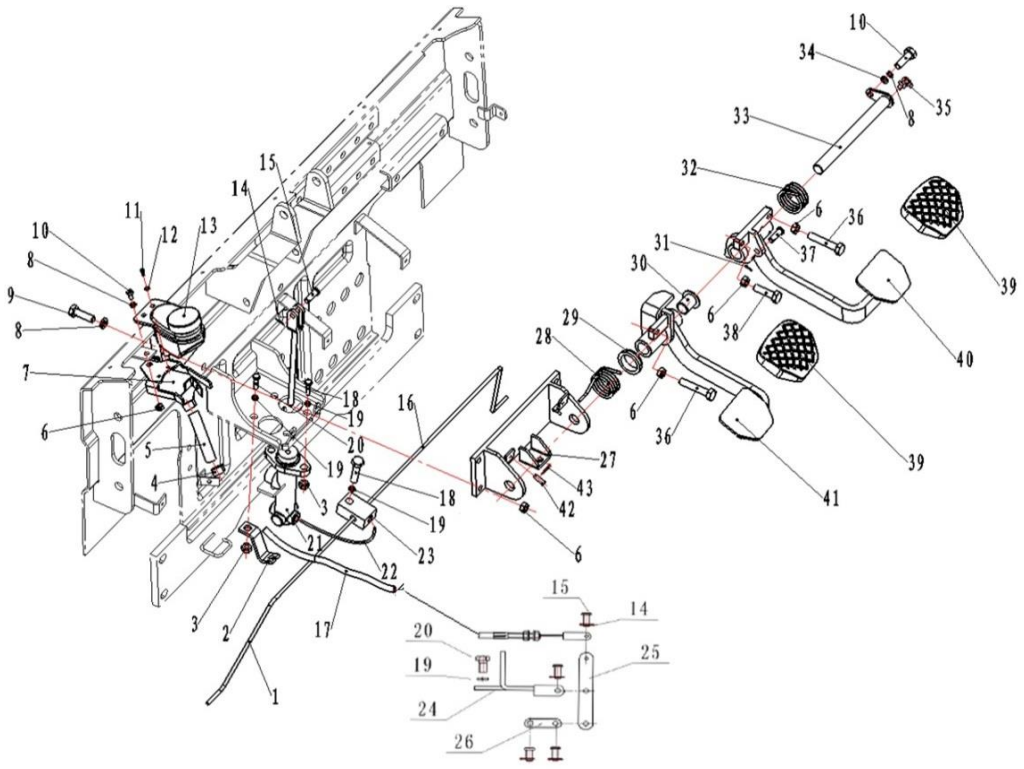

序号 Item No.		代号 Part No.	名称 Description	数量 Q' ty	备注 Remark
24	69092865	A3045801000A	Bracket	1	
25	69096260	A3045800001A	Linking rod	1	
26	69044495	M3045802003	Link board	2	
27		A30458-01100	Bracket	1	
28	69036270	A30458-01001	Torsional spring	1	
29		A30458-01002	Washer	1	
30		A30458-01003	Bushing	4	
31	69109605	GB/T91-2000	Cotter pin 2×16	2	
32	69036902	A30458-01004	Torsional spring	1	
33		A30458-01400	Pin shaft	1	
34	69000259	GB/T97.1-8	Washer 8	1	
35	69136358	JB/T7940.2-1995	Nipple	1	
36	69000217	GB/T5783-M8*55-8.8J	Bolt M8×55	2	
37	69007191	GB/T882-Φ6*20	Pin shaft B6×20	2	
38	69000311	GB/T5783-M8*35-8.8J	Bolt M8×35	1	
39	69039265	A30458-01005	Pedal cover	2	
40		A30458-01200	Brake pedal	1	
41		A30458-01300	Inch pedal	1	
42	69021756	M3035402003	Adjusting shaft	2	
43	69109605	GB/T91-2000	Cotter pin 2x25	2	

图50/Fig50. 制动微动操纵(机械式)/BRAKE & INCH CONTROL(CLUTCH TYPE)

FD20/25/30/35-AG(1)1、FD20/25/30/35T-AGK1

FD30/35-AG(5)1

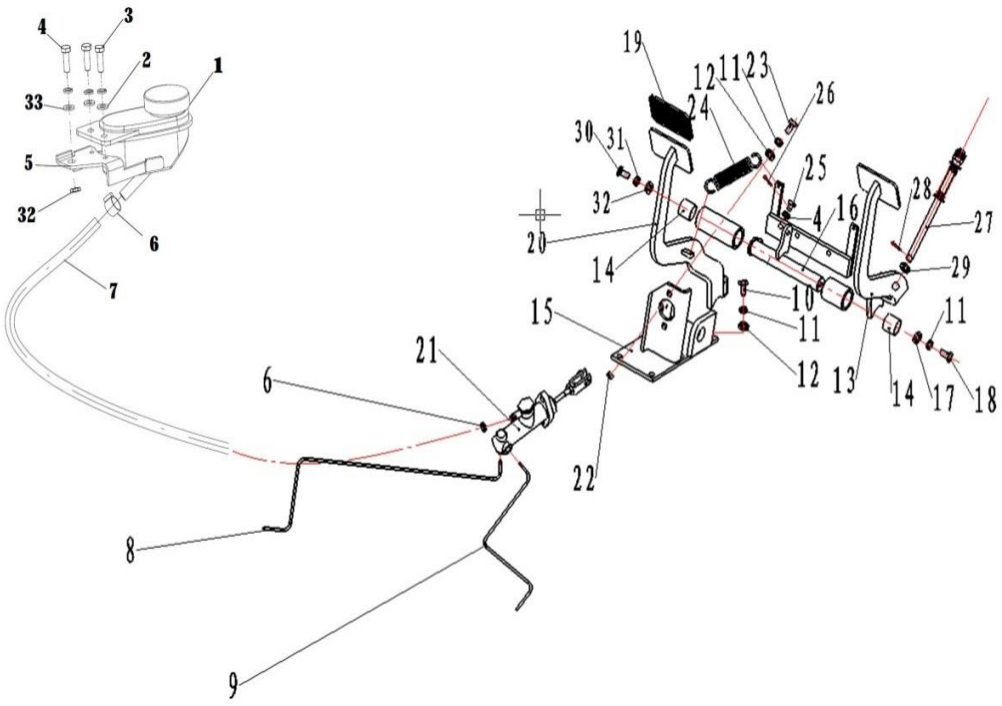

序号 Item No.		代号 Part No.	名称 Description	数量 Q'ty	备注 Remark
A		-	Clutch & Brake pedal ass`y	1	
1	69036224	A30458-02000	Brake oil pot	1	
2	69000060	GB/T93-6	Washer 6	3	
3	69000189	GB/T5783-M6*12-8.8J	Bolt M6x12	2	
4	69000309	GB/T5783-M8*16-8.8J	Bolt M8x16	1	
5	69036223	A30458-00001	Brake oil pot bracket	1	
6	69000052	JB/T8870-10-16	Hoop Φ16 (Double Wire)	2	
7	69000653	M3035400001	Hose φ10x4-700	1	
8	69001706	M3035403000	Brake pipe(left)	1	
9	69001705	M3035404000	Brake pipe(right)	1	2-2.5t
10	69000128	GB/T5783-M10*30-8.8J	Bolt M10x30	4	
11	69000053	GB/T93-10	Washer 10	7	
12	69000250	GB/T97.1-10	Washer 10	6	
13		A3035401100	Inch pedal	1	
14		60459N-1205	Bushing bearing	2	
15		M3035402100	Bracket	1	
16		M3035402200	Pin	1	
17	69006706	GB/T96.1-10	Washer 10	1	
18	69000123	GB/T5783-M10*20-8.8J	Bolt M10x20	1	
19	69021591	M3035402001	Pedal cover	2	
20		A3035401200	Brake pedal	1	
21	69021885	M3035402300	Master brake pump(TCM)	1	
22	69033312	GB/T41-M10	Nut M10	4	
23	69000130	GB/T5783-M10*35-8.8J	Bolt M10x35	4	

图50/Fig50. 制动微动操纵(机械式)/BRAKE & INCH CONTROL(TOR-CON TYPE)

FD20/25/30/35-AG(1)1、FD20/25/30/35T-AGK1

FD30/35-AG(5)1

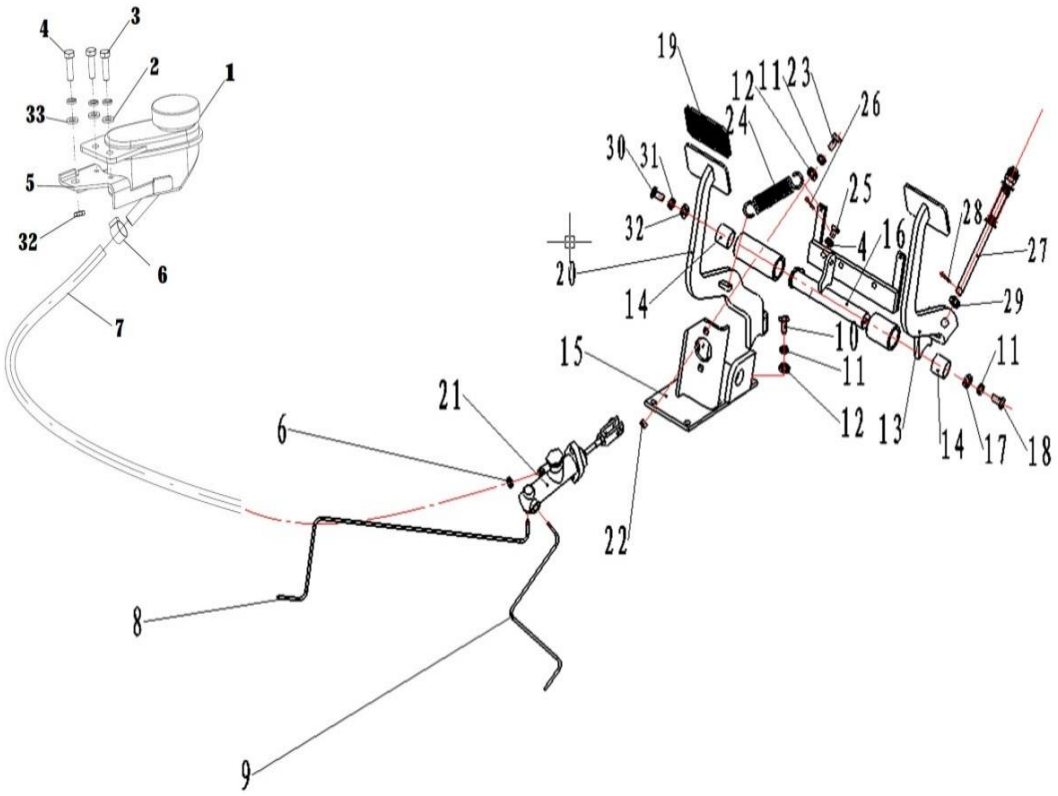

序号 Item No.		代号 Part No.	名称 Description	数量 Q'ty	备注 Remark
A		-	Brake and Inch pedal ass'y	1	
24	69022011	GB/T4142-d2.5、D18、n30、H110	Spring d2.5、D18、n30、H110	2	
25	69021756	M3035402003	Adjusting shaft	1	
26	69020760	GB/T91-2*25	Cotter pin 2x25	1	
27		A3035401300	Separation device	1	
28	69017915	GB/T91-3.2*40	Cotter pin 3.2x40	1	
29	69000251	GB/T97.1-12	Washer 12	1	
30	69000190	GB/T5783-M6*16-8.8J	Bolt M6x16	1	
31	69000258	GB/T97.1-6	Washer 6	1	
32	69033312	GB/T41-M10	Nut M10	1	
33	69000062	GB/T93-8	Washer 8	1	

图51/Fig51. 制动总泵/MASTER BRAKE PUMP

FD20/25/30/35T-AWE5、FD20/25/30/35T-AWV、FD30/35T-AGK

FG(L)20/25/30/35T-AWA、FGL20/25/30/35T-AWG

FD20/25/30/35T-AG(1)、FD30/35-AG(5)

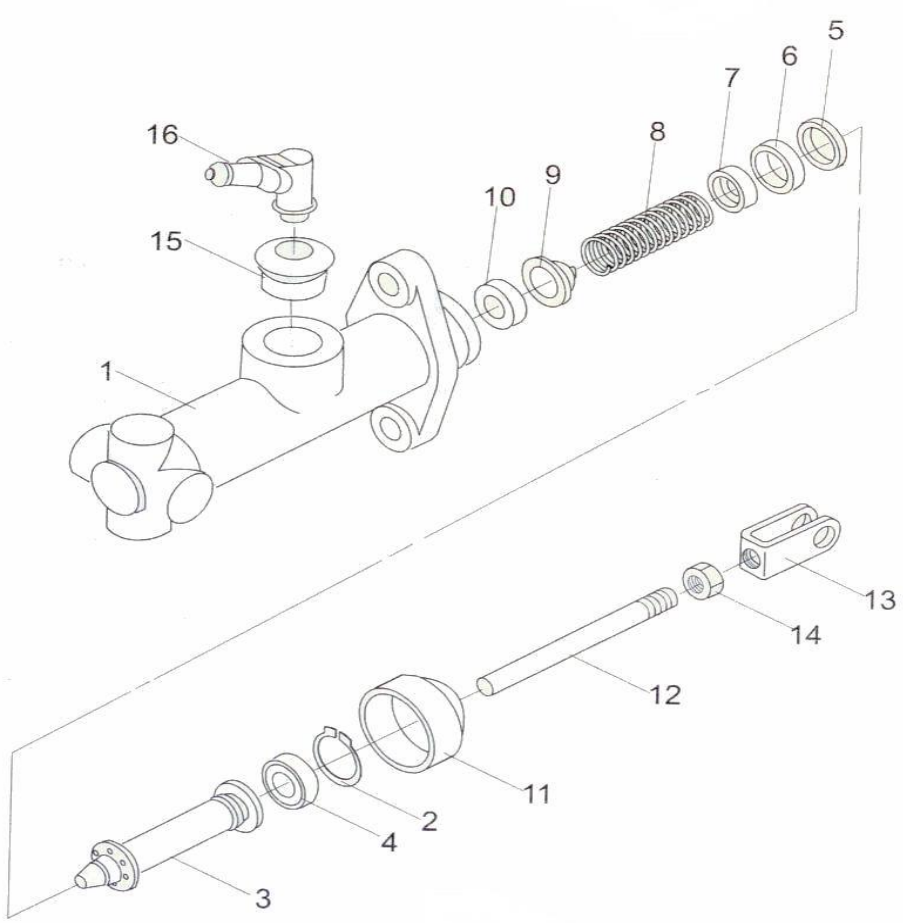

序号 Item No.		代号 Part No.	名称 Description	数量 Q' ty	备注 Remark
A	69136798	25595-40302	Master brake pump	1	
01	69135318	25595-42301	Valve body	1	
02	69135319	25595-42311	Stop ring	1	
03	69135320	25595-42332	Piston	1	
B	69135321	25595-40402	Cup ass'y	1	
04	69135322	25595-42322	Front cup	1	
05	69135323	25595-42341	Bushing cup	1	
06	69135324	25595-42351	Main cup	1	
07	69135325	25595-42361	Spring seat	1	
08	69135326	25595-42371	Spring	1	
09	69135327	25595-42381	Cut-off valve	1	
10	69135328	25595-42391	Valve seat	1	
11	69135329	25595-42431	Protective cover	1	
12	69036550	A30458-04001	Pushrod	1	
13	69135330	25595-42451	Clevis	1	
14	69088946	B5050-00008	Nut M8	1	
15	69135331	25595-42421	Rubber bushing	1	
16	69135332	25595-42411	Connector	1	

图52/Fig52. 手制动操纵/PARKING BRAKE CONTROL

FD20/25/30/35T-AWE5、FD20/25/30/35T-AWV、FD30/35T-AGK

FG(L)20/25/30/35T-AWA、FGL20/25/30/35T-AWG

FD20/25/30/35T-AG(1)、FD30/35-AG(5)

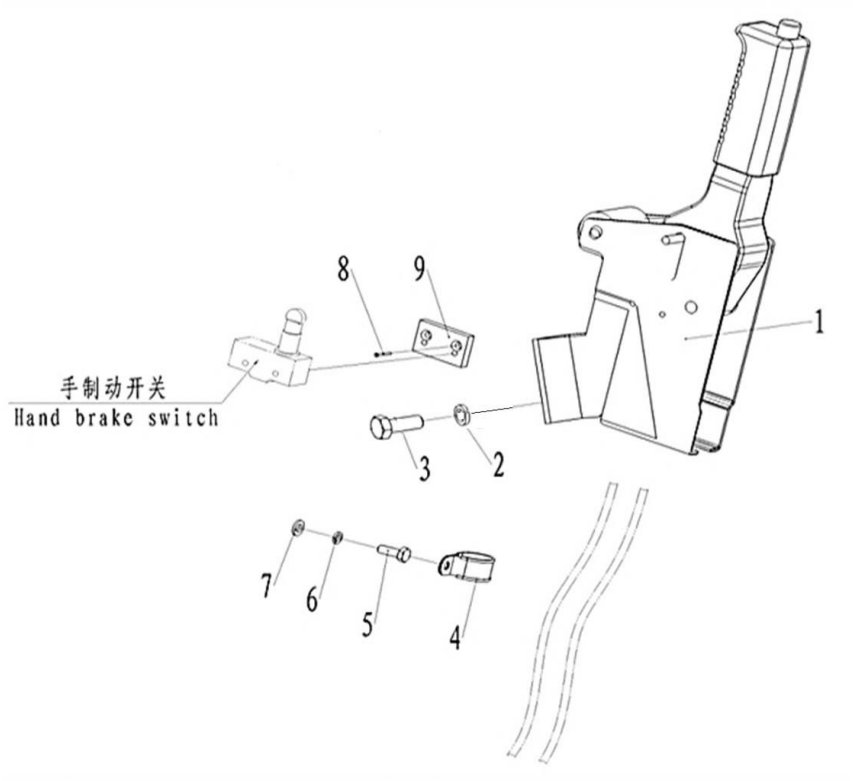

序号 Item No.		代号 Part No.	名称 Description	数量 Q' ty	备注 Remark
1	69096550	A25755-01000L	Hand braking	1	
2	69000053	GB/T93-10	Washer 10	1	
3	69000125	GB/T5783-M10*25-8.8J	Bolt M10×25	2	
4	69064643	GMS-DJR22	Pipe clamp 22	1	
5	69000190	GB/T5783-M6*16-8.8J	Bolt M6×16	1	
6	69000060	GB/T93-6	Washer 6	1	
7	69000258	GB/T97.1-6	Washer 6	1	
8	69020160	GB/T819.1-M4*10	Bolt M4×10	4	
9	69101769	A25755-00001-L-Black	Hand brak plate	1	

图54/Fig54. 车架与平衡重/FRAME & COUNTER BALANCE WEIGHT

FD20/25/30/35T-AWE5、FGL20/25/30/35T-AWG、FD30/35T-AGK

FD20/25/30/35T-AWV、FG(L)20/25/30/35T-AWA

FD20/25/30/35T-AGA/(1)、FD30/35-AG(5)

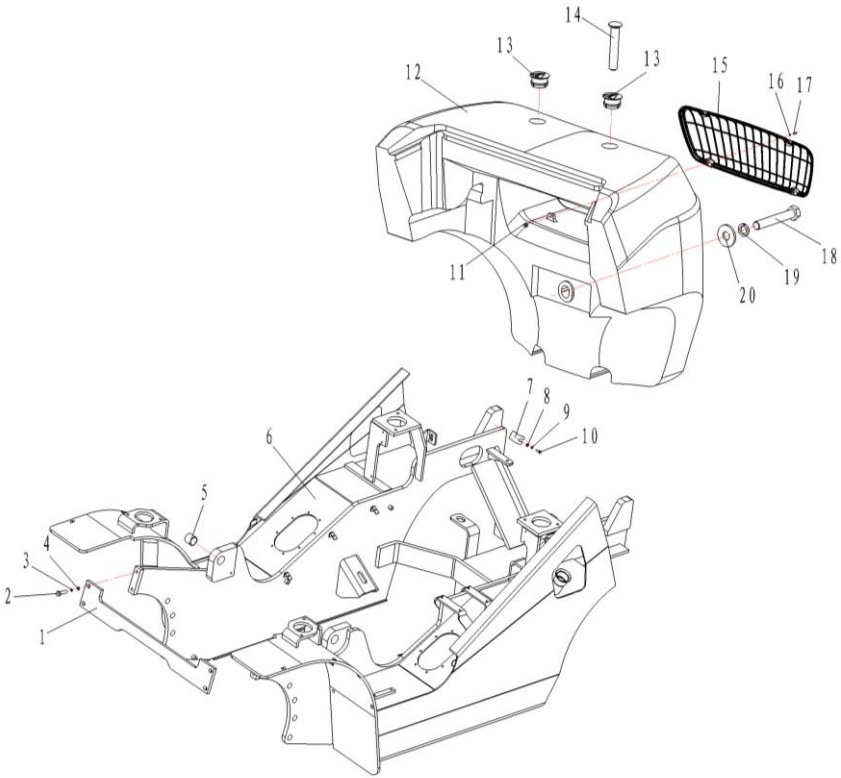

序号 Item No.		代号 Part No.	名称 Description	数量 Q' ty	备注 Remark
01		A30461-04000	Front traverse plate	1	
02	69000306	GB/T5783-M12*30-8.8J	Bolt M12×30	4	
03	69000054	GB/T93-12	Washer 12	4	
04	69000251	GB/T97.1-12	Washer 12	4	
05	69034281	A30461-00001	Lubrication bearing	2	
06	69107813	A20461D-00000-1-MRed	Frame	1	DACHAI(2-2.5T)
-	69107841	A30461D-00000-1-MRed	Frame	1	DACHAI (3-3.5T)
-	69107805	A2036100000(III)-1-MRed	Frame	1	XINCHAI (CHINA III) (2-2.5T)
-	69107829	A3036100000(III)-1-MRed	Frame	1	XINCHAI (CHINA III) (3-3.5T)
-	69107809	A20461-00000-1-MRed	Frame	1	YANMAR98、NISSAN K25(2-2.5T)
-	69107837	A30461-00000-1-MRed·	Frame	1	YANMAR98、NISSAN K25(3-3.5T)
-	69107801	A20261N00000-1-MRed	Frame	1	NISSAN K25 (2-2.5T) (硬连接)
-	69107825	A30261N00000-1-MRed	Frame	1	NISSAN K25 (3-3.5T) (硬连接)
-	69107817	A20461LS00000-1-MRed	Frame	1	MITSUBISHI S4S (2-2.5T) (硬连接)
-	69107845	A30461LL00000-1-MRed	Frame	1	MITSUBISHI S4S (3-3.5T) (硬连接)
-	69107821	A20461SY00000A-1-MRed	Frame	1	AEROSPACE MITSUBISHI 4G64 (2-2.5T)
-	69107849	A30461SY00000A-1-MRed	Frame	1	AEROSPACE MITSUBISHI 4G64 (3-3.5T)
07	69065893	M3036300006	Adjusting shim	2-4	
08	69000062	GB/T93-8	Washer 8	2	
09	69000259	GB/T97.1-8	Washer 8	2	
10	69000198	GB/T5783-M8*20-8.8J	Bolt M8×20	2	

图54/Fig54. 车架与平衡重/FRAME & COUNTER BALANCE WEIGHT

FD20/25/30/35T-AWE5、FGL20/25/30/35T-AWG、FD30/35T-AGK

FD20/25/30/35T-AWV、FG(L)20/25/30/35T-AWA

FD20/25/30/35T-AGA/(1)、FD30/35-AG(5)

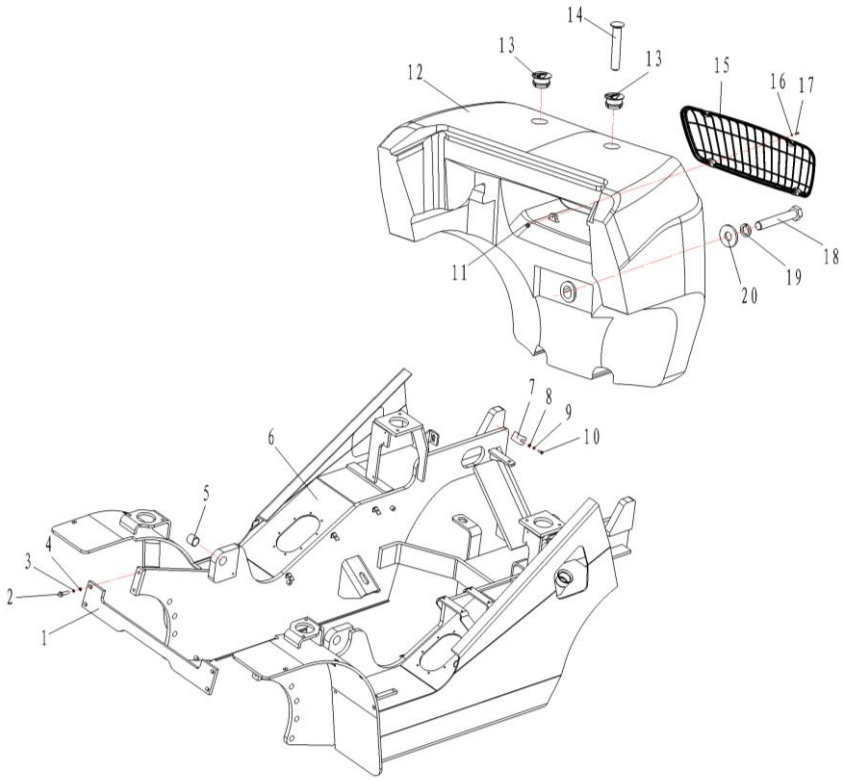

序号 Item No.		代号 Part No.	名称 Description	数量 Q' ty	备注 Remark
11	69000111	GB/T6170-M6-8J	Nut M6	4	
12		A20463-00001	Counterbalance weight	1	2T
-	69039554	A25463-00001	Counterbalance weight	1	2.5T
-	69034274	A30463-00001	Counterbalance weight	1	3T
-	69042544	A35463-00001	Counterbalance weight	1	3.5T
13	69008447	M3036300002	Plug,hoisting available	2	
14	69000266	M2576300004	Traction pin	1	
15	69034275	A30463-01000	Gauze	1	
16	69000060	GB/T93-6	Washer 6	4	
17	69000194	GB/T5783-M6*25-8.8J	Bolt M6×25	4	
18	69000196	GB/T5782-M30*200-8.8J	Bolt M30×200	1	
19	69000058	GB/T93-30	Washer 30	1	
20	69005115	M3036300004	Washer	1	

图55/Fig55. 覆盖件及安装/COVER PARTS MOUNT

FD20/25/30/35T-AWE5、FD20/25/30/35T-AWV、FD30/35T-AGK

FG(L)20/25/30/35T-AWA、FGL20/25/30/35T-AWG

FD20/25/30/35T-AG(1)、FD30/35-AG(5)

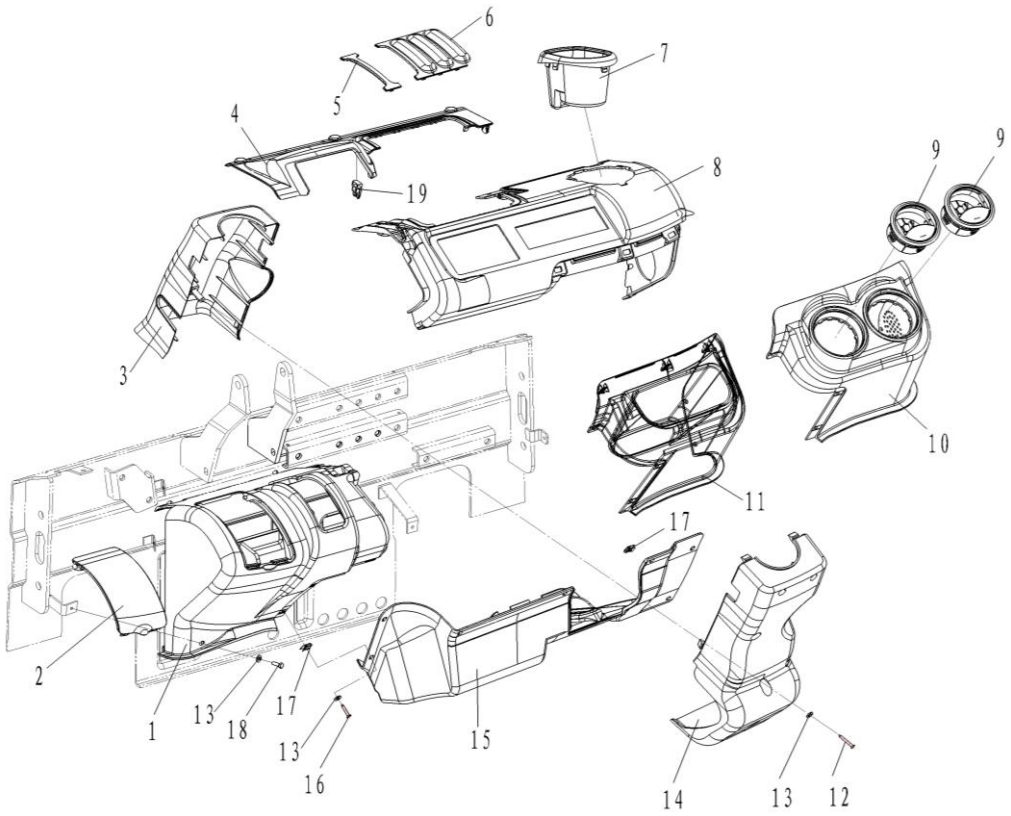

序号 Item No.		代号 Part No.	名称 Description	数量 Q' ty	备注 Remark
01	69042700	A30464-07002	Main cover(left)	1	Max-A-002
02	69042706	A30464-07008	Oil pot Cover	1	Max-A-008
03	69042707	A30464-07009	Steering column cover	1	Max-A-009
04	69042702	A30464-07004	Top cover	1	Max-A-004
05	69042704	A30464-07006	Cover B	1	Max-A-006
06	69042703	A30464-07005	Cover A	1	Max-A-005
07	69042705	A30464-07007	Cup seat	1	Max-A-007
08	69042699	A30464-07001	Main cover(right)	1	Max-A-001
09	69042710	A30464-07013	Heater connector	2	Max-A-013选配
10	69042709	A30464-07011	Heater cover	1	Max-A-011选配
11	69042711	A30464-07012	File pocket	1	Max-A-012
12	69032973	LS32973	Screw M5*16	1	
13	69000258	GB/T97.1-6	Washer 6	24	
14	69042708	A30464-07010	Cover	1	Max-A-010
15	69042701	A30464-07003	Bottom protection cover	1	Max-A-003
16	69032973	LS32973	Screw M5*16	9	
17	69134599	A30464-07000-1	Reed nut	9	
18	69039750	GB/T823-M6*16-4.8J	Screw M6×16	14	
19	69134588	09409-08326	Clip	7	

图56/Fig56. 仪表架及机罩安装/DISPLAY BRACKET AND HOOD MOUNT

FD20/25/30/35T-AWE5、FD20/25/30/35T-AWV、FD30/35T-AGK

FG(L)20/25/30/35T-AWA、FGL20/25/30/35T-AWG

FD20/25/30/35T-AG(1)、FD30/35-AG(5)

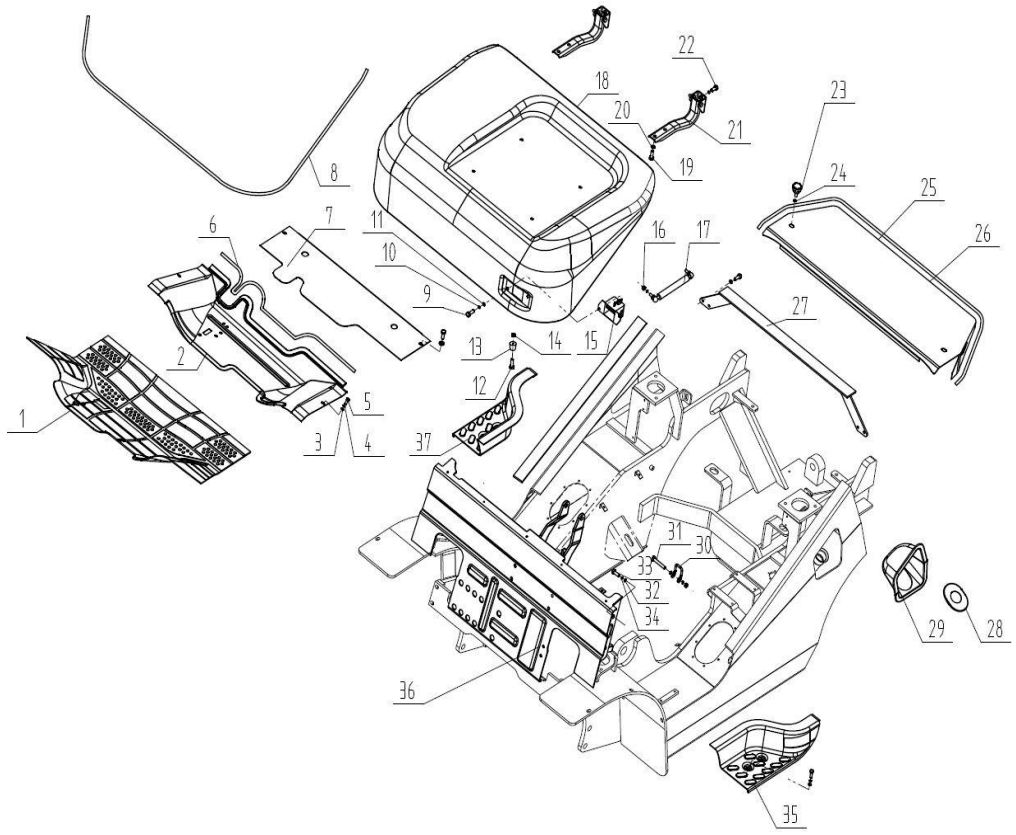

序号 Item No.		代号 Part No.	名称 Description	数量 Q'ty	备注 Remark
01	69036576	A30464-00007-1	Rubber mat	1	
02	69036565	A30464-03000	Front floor board	1	
	69063608	A30464SY01000	Front floor board	1	AEROSPACE MITSUBISHI 4G64
03	69000259	GB/T97.1-8	Washer 8	9	
04	69000062	GB/T93-8	Washer 8	19	
05	69039748	GB/T823-M8*16-4.8J	Screw M8×16	4	
06	69039068	A30464-00010	Rubber pad	1	
07	69036564	A30464-04000	Rear floor board	1	
08	69127362	A30464-00008	Seal strip	1	
09	69039750	GB/T823-M6*16-4.8J	Screw M6×16	2	
10	69000060	GB/T93-6	Washer 6	2	
11	69000258	GB/T97.1-6	Washer 6	2	
12	69005586	GB/T823-M6*25-4.8J	Screw M6×25	2	
13	69007991	M3036400027	Hood rubber pad	2	
14	69015196	GB/T889.1-M6-8J	Nut M6	2	
15	69036567	A30464-09000	Hood lock	1	
16	69000112	GB/T6170-M8-8J	Nut M8	3	
17	69036563	A30464-08000	Gas spring	1	
18	69044164	A30464-02000	Hood	1	2019.07.25
-	69133767	A30464-02000C	Hood	1	2019.07.25之后
19	69000123	GB/T5783-M10*20-8.8J	Bolt M10×20	4	
20	69000053	GB/T93-10	Washer 10	4	
21	69036569	A30464-05000	Hinge ass'y	2	
22	69000309	GB/T5783-M8*16-8.8J	Bolt M8×16	12	
23	69001904	M3036408000	Star-shaped bolt	2	
24	69003658	M3036400008	Rubber damper	2	

图56/Fig56. 仪表架及机罩安装/DISPLAY BRACKET AND HOOD MOUNT

FD20/25/30/35T-AWE5、FD20/25/30/35T-AWV、FD30/35T-AGK

FG(L)20/25/30/35T-AWA、FGL20/25/30/35T-AWG

FD20/25/30/35T-AG(1)、FD30/35-AG(5)

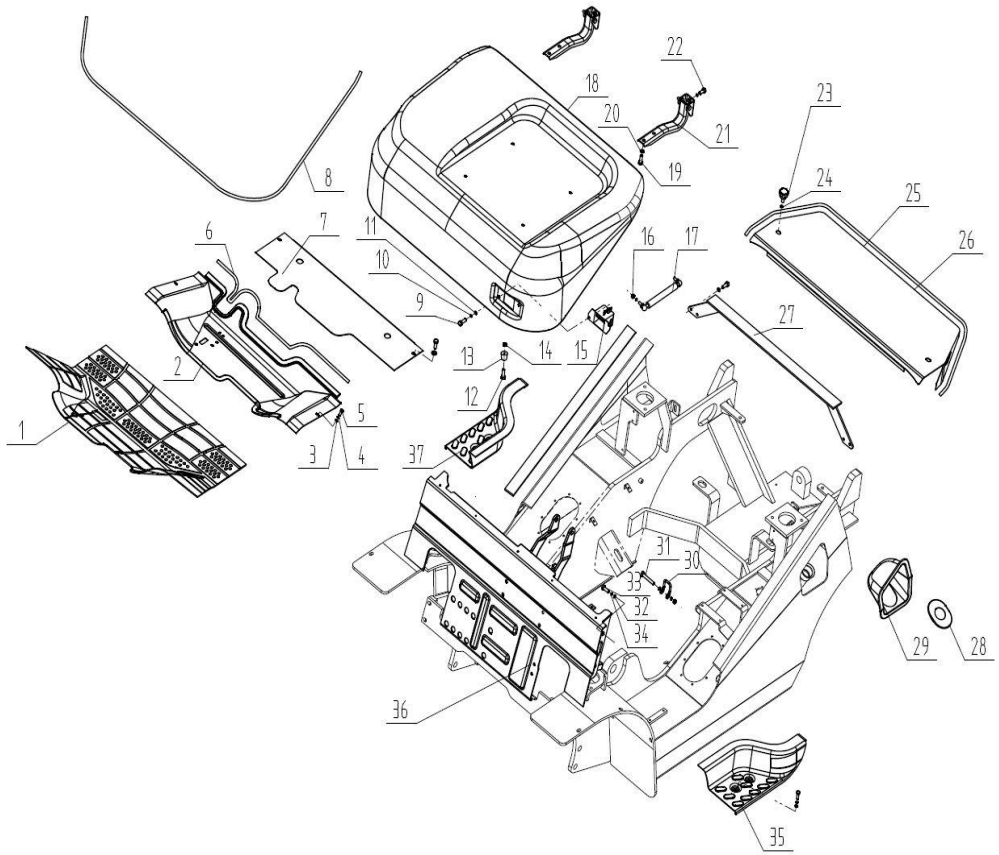

序号 Item No.		代号 Part No.	名称 Description	数量 Q'ty	备注 Remark
25	69060851	A30464-00009	Seal strip	1	
26	69036571	A30464-00006	Radiator cover	1	
	69063607	A30464SY00001	Radiator cover	1	AEROSPACE MITSUBISHI 4G64
27	69036570	A30464-06000	Cross beam	1	
28	69036573	A30464-00004	Oiling cap	1	
29	69036572	A30464-00003	Oil entry point seal cover	1	
30		A30464-00005	Hood hook	1	
31	69017795	GB/T5783-M8*50-8.8J	Bolt M8×50	1	
32	69000251	GB/T97.1-12	Washer 12	4	
33	69000144	GB/T5783-M12*20-8.8J	Bolt M12×20	4	
34	69000054	GB/T93-12	Washer 12	4	
35	69036575	A30464-00001	Slip pad(left)	1	
36	69036577	A30464-01000	Display bracket	1	
37	69043160	A30464-00002	Slip pad(right)	1	

图57/Fig57. 蓄电池及安装/START BATTERY MOUNT

FD20/25/30/35T-AWE5、FD20/25/30/35T-AWV、FD30/35T-AGK

FG(L)20/25/30/35T-AWA、FGL20/25/30/35T-AWG

FD20/25/30/35T-AG(1)、FD30/35-AG(5)

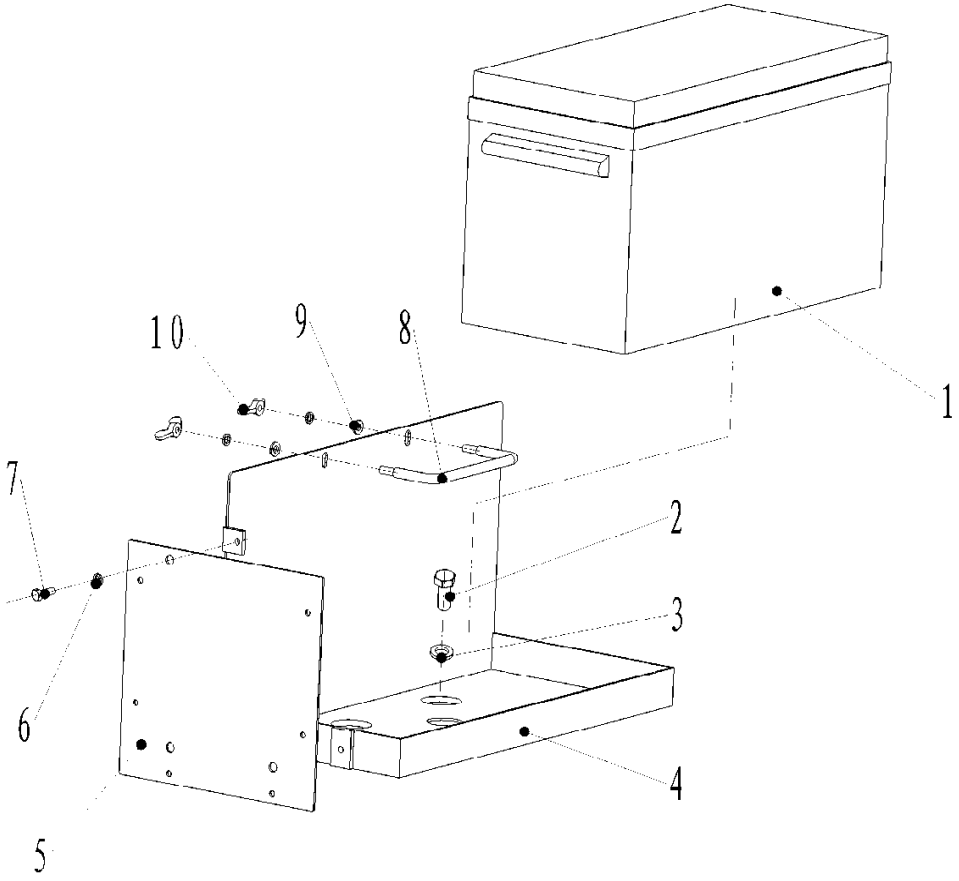

序号 Item No.		代号 Part No.	名称 Description	数量 Q' ty	备注 Remark
01	69002947	M3031402000	Battery	1	YANMAR98、MITSUBISHI S4S、XINCHAI、DACHAI
-	69007247	M30214N02000	Battery	1	NISSAN K25、AEROSPACE
02	69000309	GB/T5783-M8*16-8.8J	Bolt M8×16	4	
03	69000085	GB/T96.1-8	Washer 8	4	
04	69023124	30314M-01000	Start battery seat(Diesel)	1	YANMAR98、MITSUBISHI S4S、XINCHAI、DACHAI
-	69037929	M30214N-01000	Start battery seat(LPG)	1	NISSAN K25、AEROSPACE
05	69034311	A30414-00001	Electric box seat	1	
06	69000060	GB/T93-6	Washer 6	5	
07	69000189	GB/T5783-M6*12-8.8J	Bolt M6×12	3	
08	69023123	30314M-00001A	Fixing rod	1	
09	69000258	GB/T97.1-6	Washer 6	2	
10		GB/T62.1-M6	Nut M6	2	

图58/Fig58. 护顶架/OVERHEAD GUARD

FD20/25/30/35T-AWE5、FD20/25/30/35T-AWV、FD30/35T-AGK

FG(L)20/25/30/35T-AWA、FGL20/25/30/35T-AWG

FD20/25/30/35T-AG(1)、FD30/35-AG(5)

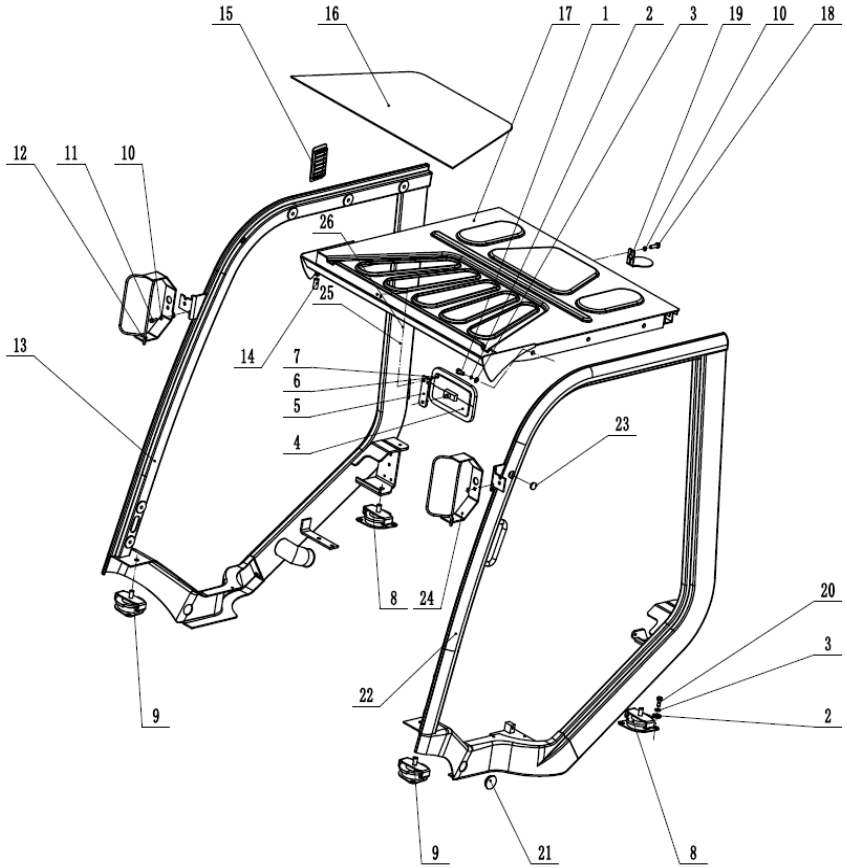

序号 Item No.		代号 Part No.	名称 Description	数量 Q' ty	备注 Remark
01	69000306	GB/T5783-M12*30-8.8J	Bolt M12×30	6	
02	69000054	GB/T93-12	Washer 12	14	
03	69000251	GB/T97.1-12	Washer 12	14	
04	69076217	MJ30351-00002	Rearview mirror	1	单镜Single mirror
-	69076217	MJ30351-00002	Rearview mirror	2	双镜，立柱两侧Double mirror on both sides
05	69036498	A30451-00002A	Rearview mirror bracket	1	
06	69000062	GB/T93-8	Washer 8	2	
07	69000309	GB/T5783-M8*16-8.8J	Bolt M8×16	2	
08	69033867	A30451-04000	Rubber damperⅠ	2	
09	69033868	A30451-05000	Rubber damperⅡ	2	
10	69000060	GB/T93-6	Washer 6	4	
11	69000190	GB/T5783-M6*16-8.8J	Bolt M6×16	2	
12	69060042	A30451-03000A	Light bracket(right)	1	
13	69036470	A30451-01300	Right leg	1	
14	69067261	A30451-00003	Hose Φ12×1-1600	1	
15	69026055	30351M-00003	Air inlet	1	
16	69034289	A30451-00001	Roof glass	1	
17	69036482	A30451-01100	Roof	1	
18	69000189	GB/T5783-M6*12-8.8J	Bolt M6×12	2	
19	69086990	30351M-00002A	Caution light seat	1	
20	69000002	GB/T5783-M12*25-8.8J	Bolt 12×25	8	
21	69001764	M3036400007	Rubber plug	2	
22	69036488	A30451-01200	Left leg	1	
23	69023129	30351M-00001	Rubber plug	4	
24	69060041	A30451-02000A	Light bracket(left)	1	

图58/Fig58. 护顶架/OVERHEAD GUARD

FD20/25/30/35T-AWE5、FD20/25/30/35T-AWV、FD30/35T-AGK

FG(L)20/25/30/35T-AWA、FGL20/25/30/35T-AWG

FD20/25/30/35T-AG(1)、FD30/35-AG(5)

序号 Item No.		代号 Part No.	名称 Description	数量 Q' ty	备注 Remark
25	69135048	MJ30351-00003	Rubber plug	2	2019.10.22开始执行
26	69135049	MJ30351-00004	Rubber plug	1	2019.10.22开始执行

15 16 17 1 2 3 19 10 18

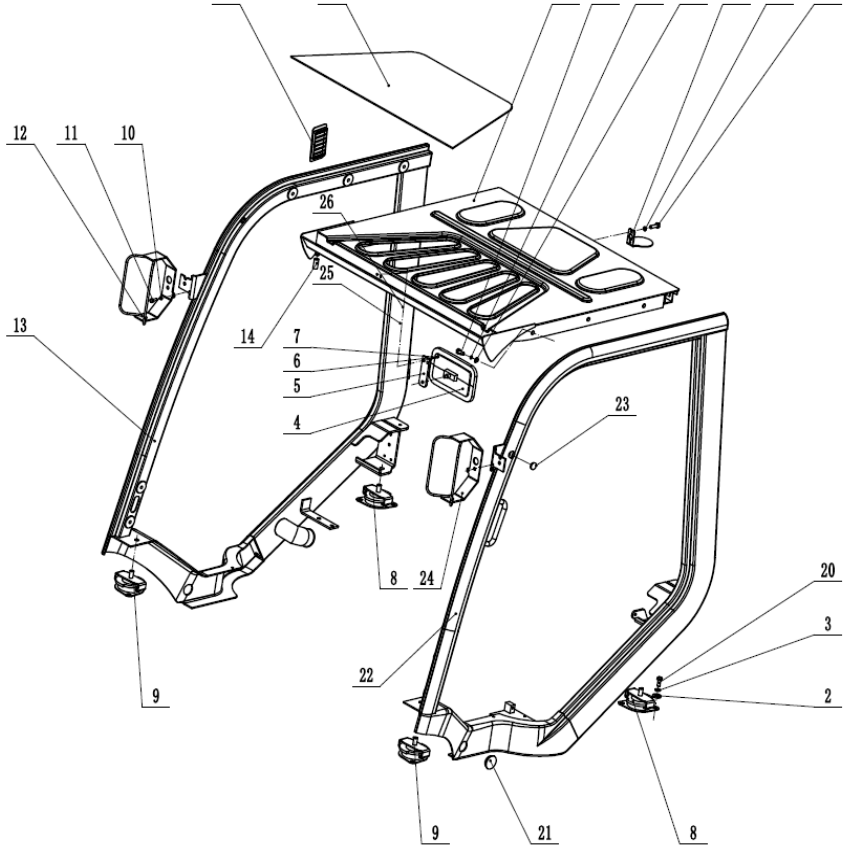
12
11
10
26
25
13
14
7
6
5
4
23
8
24
20
3
22
2
9
9
21
8

图59/Fig59. 工作油箱装置及安装/HYDRAULIC OIL TANK MOUNT

FD20/25/30/35T-AWE5、FD20/25/30/35T-AWV、FD30/35T-AGK

FG(L)20/25/30/35T-AWA、FG(L)20/25/30/35T-AWG

FD20/25/30/35T-AG(1)、FD30/35-AG(5)

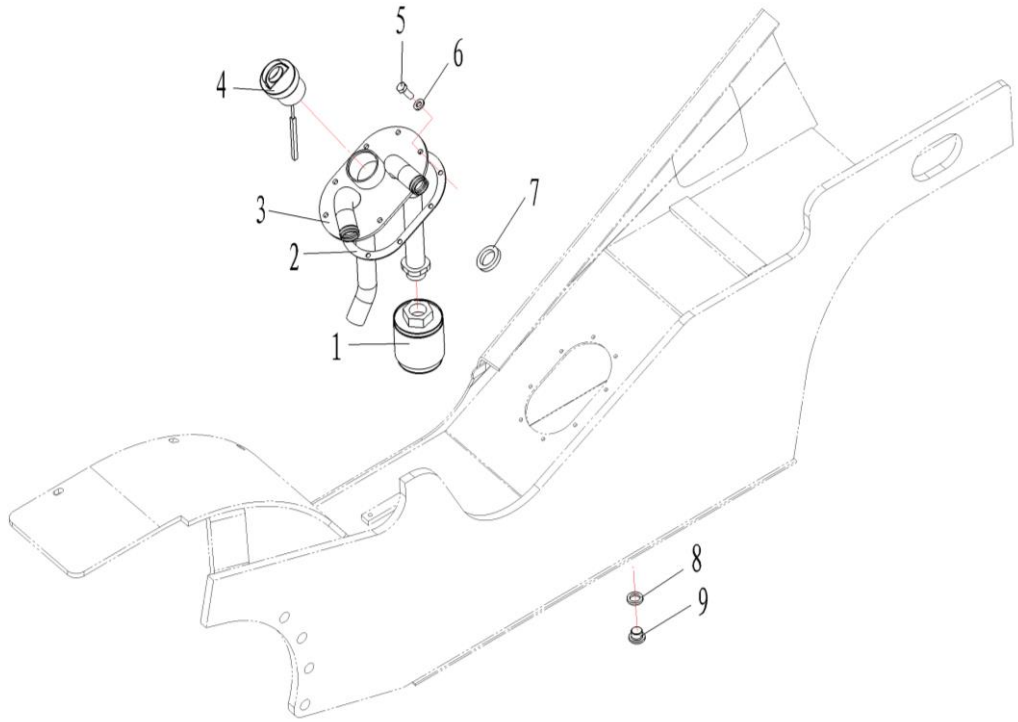

序号 Item No.		代号 Part No.	名称 Description	数量 Q' ty	备注 Remark
01	69001923	M3037503000	Hydraulic oil filter Y0809B	1	
02	69000679	M3032200007	Seal gasket	1	
03	69036881	A30475-01000	Cover plate ass'y	1	
04	69034258	A30475-02000	Oiling cap	1	
-	69039622	A20475-01000	Oiling cap	1	
05	69000198	GB/T5783-M8*20-8.8J	Bolt M8×20	8	
06	69010797	JB982-8	Washer 8	8	
07	69035702	M3032200003	Magnet60*32*10	1	
08	69000357	JB/T982-20	Washer 20	1	
09	69003910	M3032200002	Drain plug	1	

图60/Fig60. 多路换向阀操纵(二联 TWO THROW) /MULTI-WAY VALVE MOUNT(TWO-THROW)

FD20/25/30/35T-AWE5、FD20/25/30/35T-AWV、FD30/35T-AGK

FG(L)20/25/30/35T-AWA、FG(L)20/25/30/35T-AWG

FD20/25/30/35T-AG(1)、FD30/35-AG(5)

序号 Item No.		代号 Part No.	名称 Description	数量 Q' ty	备注 Remark
01	69034262	A30474-00001	Rubber damper	6	
02	69000053	GB/T93-10	Washer 10	7	
03	69011886	GB/T5786-M10*1.25*25	Bolt M10×1.25×25	3	

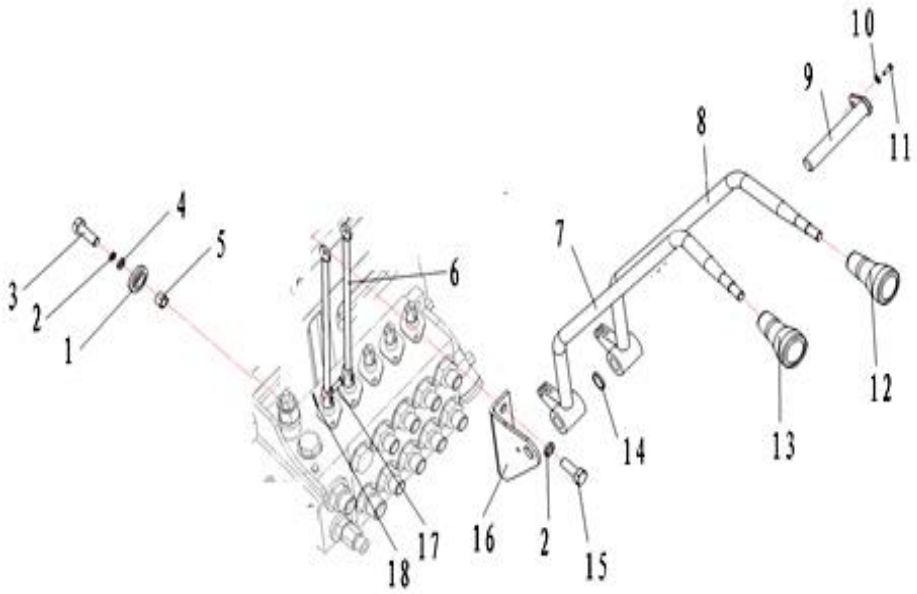

04	69006706	GB/T96.1-10	Washer 10	3	
05	69034263	A30474-00002	Steel casing	3	
06	69001759	M2037400003	Connecting Rod	2	
07	69034265	A30474-01000	Lift lever	1	
08	69034266	A30474-02000	Tilt lever	1	
09		A30474-06000	Two-throw valve pin	1	
10	69000060	GB/T93-6	Washer 6	1	
11	69000189	GB/T5783-M6*12-8.8J	Bolt M6×12	1	
12	69089161	M3037400007A	Tilt knob	1	
13	69089160	M3037400006A	Lift knob	1	
14	69136211	M2577400003	Multi-way valve nylon bushing	按需 On	
15	69000123	GB/T5783-M10*20-8.8J	Bolt M10×20	4	
16	69080585	A30474-00003A	Bracket	2	
17	69000322	M3037400001	Pin	4	
18	69109605	GB/T91-2000	Cotter pin 2×12	4	

图61/Fig61. 多路换向阀操纵(三联 THREE THROW)/MULTI-WAY VALVE MOUNT(THREE-THROW)

FD20/25/30/35T-AWE5、FD20/25/30/35T-AWV、FD30/35T-AGK

FG(L)20/25/30/35T-AWA、FG(L)20/25/30/35T-AWG

FD20/25/30/35T-AG(1)、FD30/35-AG(5)

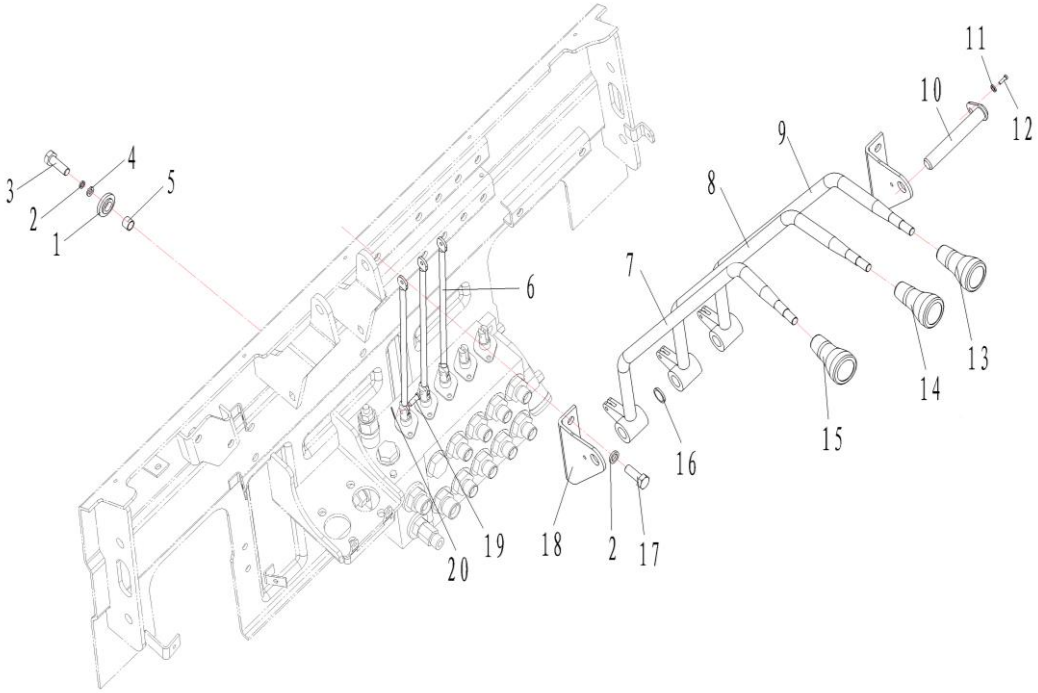

序号 Item No.		代号 Part No.	名称 Description	数量 Q' ty	备注 Remark
01	69034262	A30474-00001	Rubber damper	6	
02	69000053	GB/T93-10	Washer 10	7	
03	69011886	GB/T5786-M10*1.25*25	Bolt M10×1.25×25	3	
04	69006706	GB/T96.1-10	Washer 10	3	
05	69034263	A30474-00002	Steel casing	3	
06	69001759	M2037400003	Connecting Rod	3	
07	69034265	A30474-01000	Lift lever	1	
08	69034266	A30474-02000	Tilt lever	1	
09	69034267	A30474-03000	3rd way valve lever	1	
10		A30474-07000	Three-throw valve pin	1	
11	69000060	GB/T93-6	Washer 6	1	
12	69000189	GB/T5783-M6*12-8.8J	Bolt M6×12	1	
13	69089162	M3037400008A	Knob for attachments	1	
14	69089161	M3037400007A	Tilt knob	1	
15	69089160	M3037400006A	Lift knob	1	
16	69136211	M2577400003	Multi-way valve nylon bushing	按需 On	
17	69000123	GB/T5783-M10*20-8.8J	Bolt M10×20	4	
18	69080585	A30474-00003A	Bracket	2	
19	69000322	M3037400001	Pin shaft	6	
20	69109605	GB/T91-2000	Cotter pin 2×12	6	

图62/Fig62. 多路换向阀操纵(四联 FOUR THROW)/MULTI-WAY VALVE MOUNT(FOUR-THROW)

FD20/25/30/35T-AWE5、FD20/25/30/35T-AWV、FD30/35T-AGK

FG(L)20/25/30/35T-AWA、FG(L)20/25/30/35T-AWG

FD20/25/30/35T-AG(1)、FD30/35-AG(5)

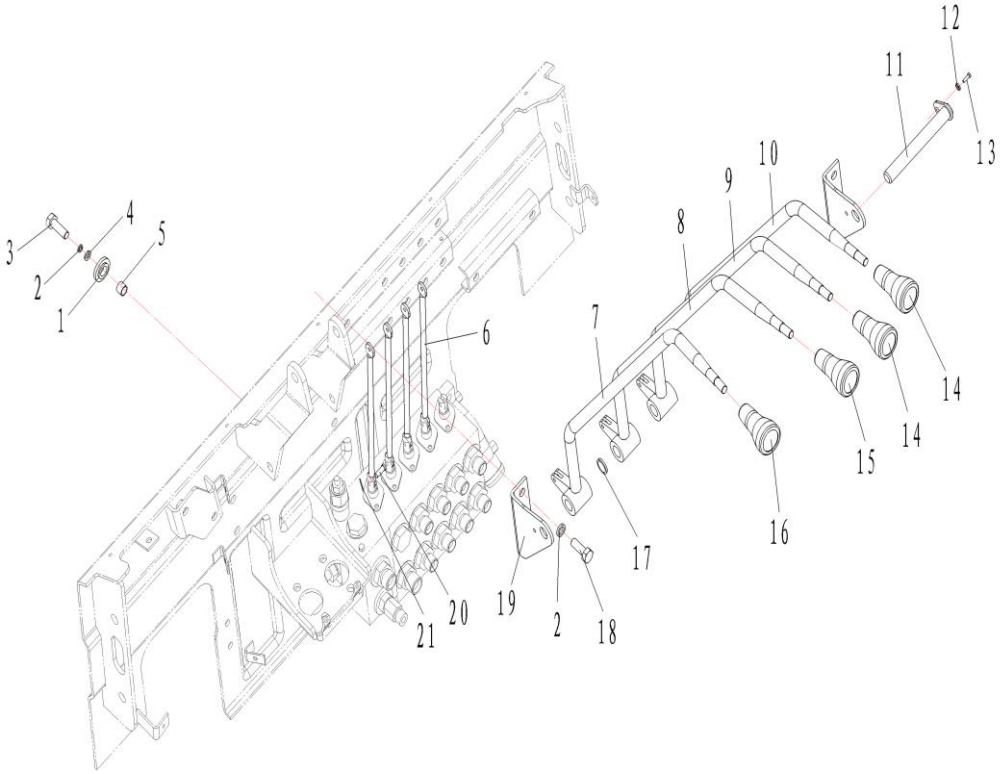

序号 Item No.		代号 Part No.	名称 Description	数量 Q' ty	备注 Remark
01	69034262	A30474-00001	Rubber damper	6	
02	69000053	GB/T93-10	Washer 10	7	
03	69011886	GB/T5786-M10*1.25*25	Bolt M10×1.25×25	3	
04	69006706	GB/T96.1-10	Washer 10	3	
05	69034263	A30474-00002	Steel casing	3	
06	69001759	M2037400003	Connecting Rod	4	
07	69034265	A30474-01000	Lift lever	1	
08	69034266	A30474-02000	Tilt lever	1	
09	69034267	A30474-03000	3rd way valve lever	1	
10	69034268	A30474-04000	4th way valve lever	1	
11		A30474-08000	Four-way valve pin shaft	1	
12	69000060	GB/T93-6	Washer 6	1	
13	69000189	GB/T5783-M6*12-8.8J	Bolt M6×12	1	
14	69089162	M3037400008A	Knob for attachments	2	
15	69089161	M3037400007A	Tilt knob	1	
16	69089160	M3037400006A	Lift knob	1	
17	69136211	M2577400003	Multi-way valve nylon bushing	按需 On	
18	69000123	GB/T5783-M10*20-8.8J	Bolt M10×20	4	
19	69080585	A30474-00003A	Bracket	2	
20	69000322	M3037400001	Pin shaft	8	
21	69109605	GB/T91-2000	Cotter pin 2×12	8	

图63/Fig63. 多路换向阀操纵(五联)/MULTI-WAY VALVE MOUNT(FIVE-THROW)

FD20/25/30/35T-AWE5、FD20/25/30/35T-AWV、FD30/35T-AGK

FG(L)20/25/30/35T-AWA、FG(L)20/25/30/35T-AWG

FD20/25/30/35T-AG(1)、FD30/35-AG(5)

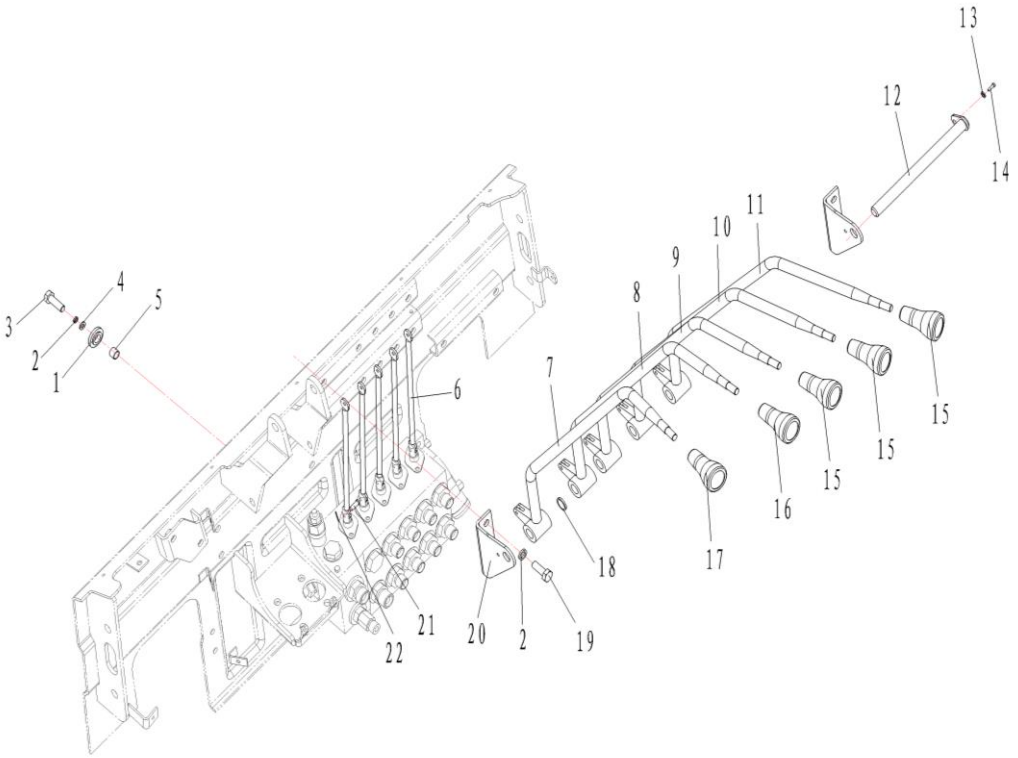

序号 Item No.		代号 Part No.	名称 Description	数量 Q' ty	备注 Remark
01	69034262	A30474-00001	Rubber damper	6	
02	69000053	GB/T93-10	Washer 10	7	
03	69011886	GB/T5786-M10*1.25*25	Bolt M10×1.25×25	3	
04	69006706	GB/T96.1-10	Washer 10	3	
05	69034263	A30474-00002	Steel casing	3	
06	69001759	M2037400003	Connecting Rod	5	
07	69034265	A30474-01000	Lift lever	1	
08	69034266	A30474-02000	Tilt lever	1	
09	69034267	A30474-03000	3rd way valve lever	1	
10	69034268	A30474-04000	4th way valve lever	1	
11	69034269	A30474-05000	5th way valve lever	1	
12	69034273	A30474-09000	Five-throw valve pin shaft	1	
13	69000060	GB/T93-6	Washer 6	1	
14	69000189	GB/T5783-M6*12-8.8J	Bolt M6×12	1	
15	69089162	M3037400008A	Knob for attachments	3	
16	69089161	M3037400007A	Tilt knob	1	
17	69089160	M3037400006A	Lift knob	1	
18	69136211	M2577400003	Multi-way valve bushing	按需 On	
19	69000123	GB/T5783-M10*20-8.8J	Bolt M10×20	4	
20	69080585	A30474-00003A	Bracket	2	
21	69000322	M3037400001	Pin shaft	10	
22	69109605	GB/T91-2000	Cotter pin 2×12	10	

图64/Fig64. 液压系统/HYDRAULIC SYSTEM

FD20/25/30/35（T）、FG(L)20/25/30/35（T）

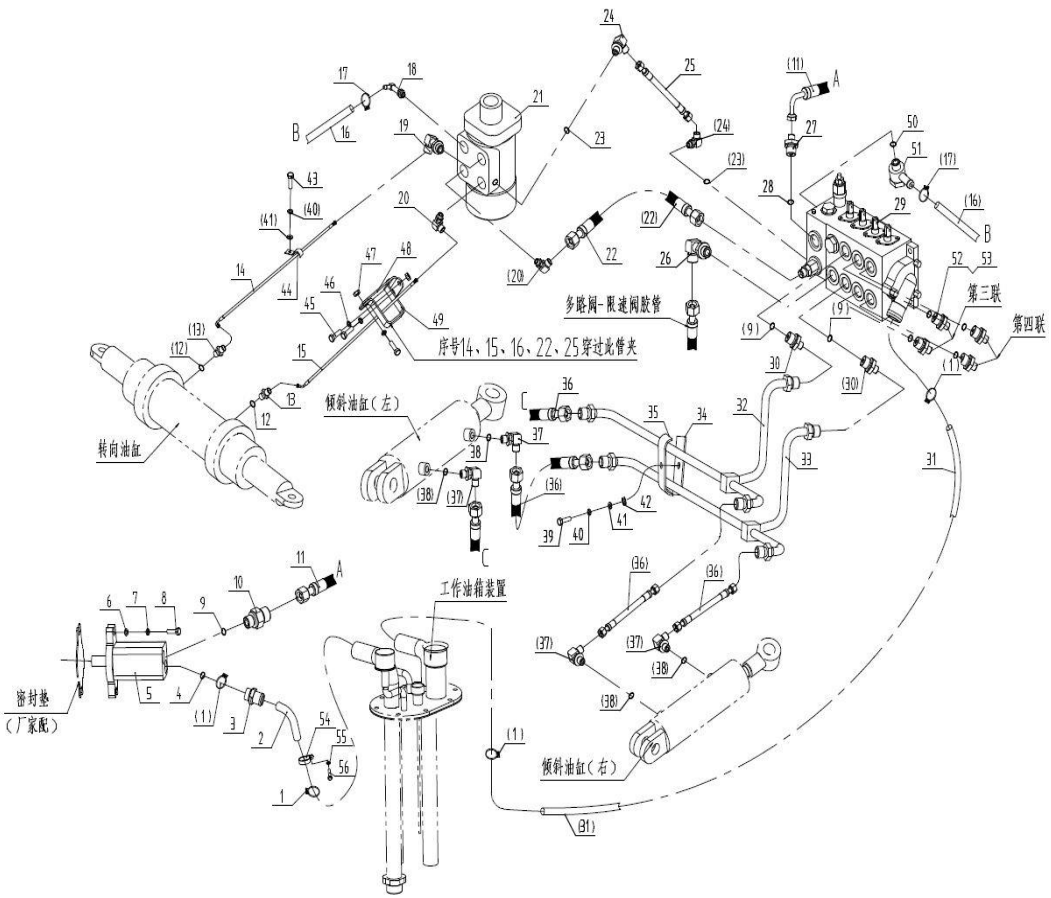

序号 Item No.	物料ID ID.	代号 Part No.	名称 Description	数量 Q'ty	备注 Remark
A	N/A	A30476-00000	Hydraulic Piping system	1	2-3.5t
01	69052895	JB/T8870-32-44	Hose clamp Φ32-44	4	
02	69035705	A30476-00001/1	Pump oil suction pipe	1	YANMAR98、NISSAN K25
-	69042931	A30476-00001/2	Pump oil suction pipe	1	MITSUBISHI S4S
-	69047026	A30476-00001/3	Pump oil suction pipe	1	XINCHAI
-	69089218	A30476-00001/4A	Pump oil suction pipe	1	CA498
-	69076167	A30476-00001/5	Pump oil suction pipe	1	AEROSPACE MITSUBISHI 4G64
03	69001280	M3037600005	Pump oil suction fitting	1	
04	69124133	GB1235-35*3.5-G	O-ring 35*3.5	1	
05	69038406	A30476-05100	Gear pump	1	YANMAR98
-	69042598	A30476-05200	Gear pump	1	NISSAN K25、CA498、AEROSPACE MITSUBISHI 4G64
-	69047027	A30476-05300	Gear pump	1	XINCHAI
-	69059546	A30476-05400	Gear pump	1	MITSUBISHI S4S
06	69000250	GB/T97.1-10	Washer 10	2	
07	69000053	GB/T93-10	Washer 10	2	
08	69000130	GB/T5783-M10*35-8.8J	Bolt M10*35	2	
09	69124131	GB1235-22*2.4-G	O-ring 22*2.4	3	
10	69001278	M3037600004	Pump outlet fitting	1	
11	69035706	A30476-00002/1	Multi-way valve oil inlet H.P.hose	1	YANMAR98、NISSAN K25、CA498、AEROSPACE MITSUBISHI 4G64
-	69042932	A30476-00002/2	Multi-way valve oil inlet H.P.hose	1	MITSUBISHI S4S
-	69041922	35B76-00002	Multi-way valve oil inlet H.P.hose	1	XINCHAI
12	69124124	GB1235-18*2.4-G	O-ring 18*2.4	2	
13	69003280	M3037600003	Steering cylinder connector	2	
14	69035707	A30476-00003	Steering cylinder H.P. hose I	1	

图64/Fig64. 液压系统/HYDRAULIC SYSTEM

FD20/25/30/35（T）、FG(L)20/25/30/35（T）

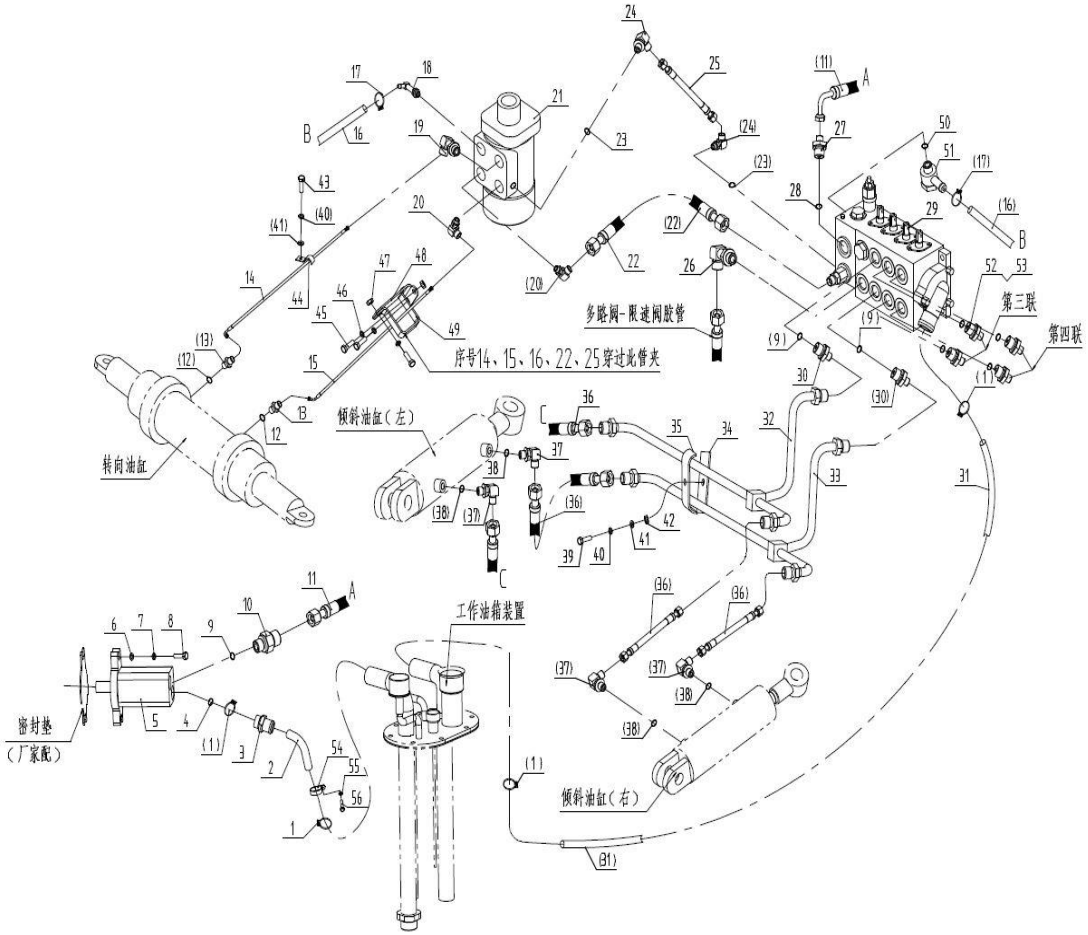

序号 Item No.	物料ID ID.	代号 Part No.	名称 Description	数量 Q'ty	备注 Remark
15	69035708	A30476-00004	Steering cylinder H.P. hose Ⅱ	1	
16	69106447	LS106447	Orbitrol oil returning pipe	500mm	
17	69036894	JB/T8870-16-25	Hose clamp Φ16-25	2	
18	69001503	M3037607000	Orbitrol oil returning connector	1	
19	69035710	A30476-01000	Orbitrol connector Ⅰ	1	
20	69064780	A25776-02000	Orbitrol connector Ⅱ	2	
21	69069301	A30476-06000	Orbitrol	1	
22	69035712	A30476-00006	Orbitrol Oil inlet H.P. hose	1	
23	69134087	GB/T3452.1-8.5*2.65-G	O-ring 8.5*2.65	2	
24	69035500	25D76X-06000	Sensor connector	2	
25	69035713	A30476-00007	Sensor H.P. hose	1	
26	69003278	M3037601000	Multi-valve connector(to lift cylinder)	1	
27	69024858	45776-13000	Valve connector,oil-inlet	1	
28	69022457	GB/T1235-24*2.4	O-ring 24*2.4	1	
29	69027949	25D76X-02100	Multi-way valve	1	二联 TWO THROW
-	69027950	25D76X-02200	Multi-way valve	1	三联 THREE THROW
-	69027951	25D76X-02300	Multi-way valve	1	四联 FOUR THROW
30	69001303	M3037600012	Valve connector(to tilting cylinder)	2	
31	69035714	A30476-00008	Oil-returning hose	1	
32	69035715	A30476-03000	Tilt cylinder pipe Ⅰ	1	
33	69035716	A30476-04000	Tilt cylinder pipe Ⅱ	1	
34	69003286	M2037600001	Clip Ⅰ	1	
35	69003446	M2037600002	Clip Ⅱ	1	
36	69001490	M3037600008	Tilt cylinder hose(front)	4	
37	69003277	M3037602000	Tilt cylinder connector	4	

图64/Fig64. 液压系统/HYDRAULIC SYSTEM

FD20/25/30/35（T）、FG(L)20/25/30/35（T）

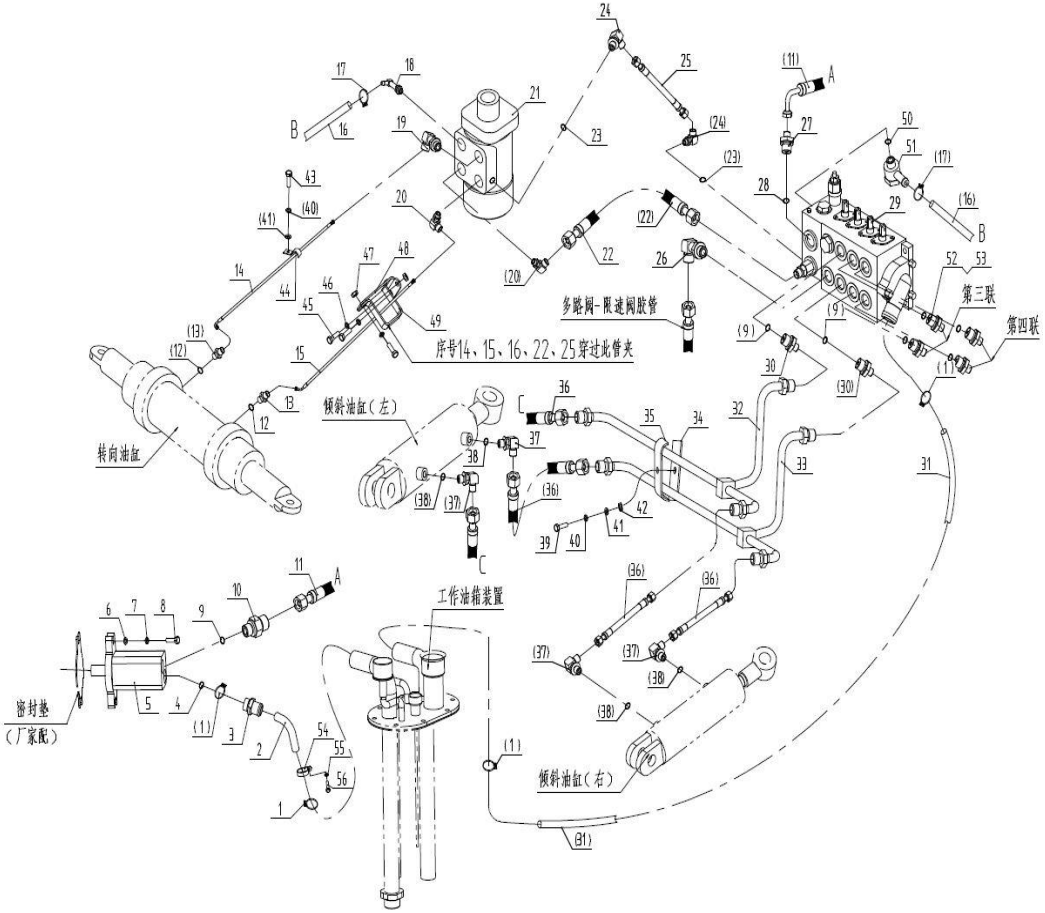

序号 Item No.	物料ID ID.	代号 Part No.	名称 Description	数量 Q'ty	备注 Remark
38	69011421	GB1235-11.2*2.4	O-ring 16*2.4	4	
39	69000194	GB/T5783-M6*25-8.8J	Bolt M6*25	1	
40	69000060	GB/T93-6	Washer 6	4	
41	69000258	GB/T97.1-6	Washer 6	4	
42	69000111	GB/T6170-M6-8J	Nut M6	1	
43	69000189	GB/T5783-M6*12-8.8J	Bolt M6*12	3	
44	69001685	M3037600023	Clip	3	
45	69000198	GB/T5783-M8*20-8.8J	Bolt M8*20	3	
46	69000062	GB/T93-8	Washer 8	3	
47	69000111	GB/T6170-M6-8J	Nut M6	3	
48	69041115	A30476-00009	Fixing plate	1	
49	69041116	A30476-00010	Clip	1	
50	69000355	JB/T982-16	Combination gasket 16	2	
51	N/A	25D76X-04000	Hinge bolt	1	厂家自带（取消）cancel
52	69001504	M3037600021	Orbitrol connector	2	三联 THREE THROW
53	69001504	M3037600021	Orbitrol connector	4	四联 FOUR THROW
54	69087375	GMS-DJR50	Clip	2	MITSUBISHI S4S
55	69000258	GB/T97.1-6	Washer 6	2	MITSUBISHI S4S
56	69000189	GB/T5783-M6*12-8.8J	Bolt M6*12	2	MITSUBISHI S4S

图65/Fig65. 液压系统（硬连接）/HYDRAULIC SYSTEM（RIGIDITY JOINT）

FD20/25/30/35（T）、FG(L)20/25/30/35（T）

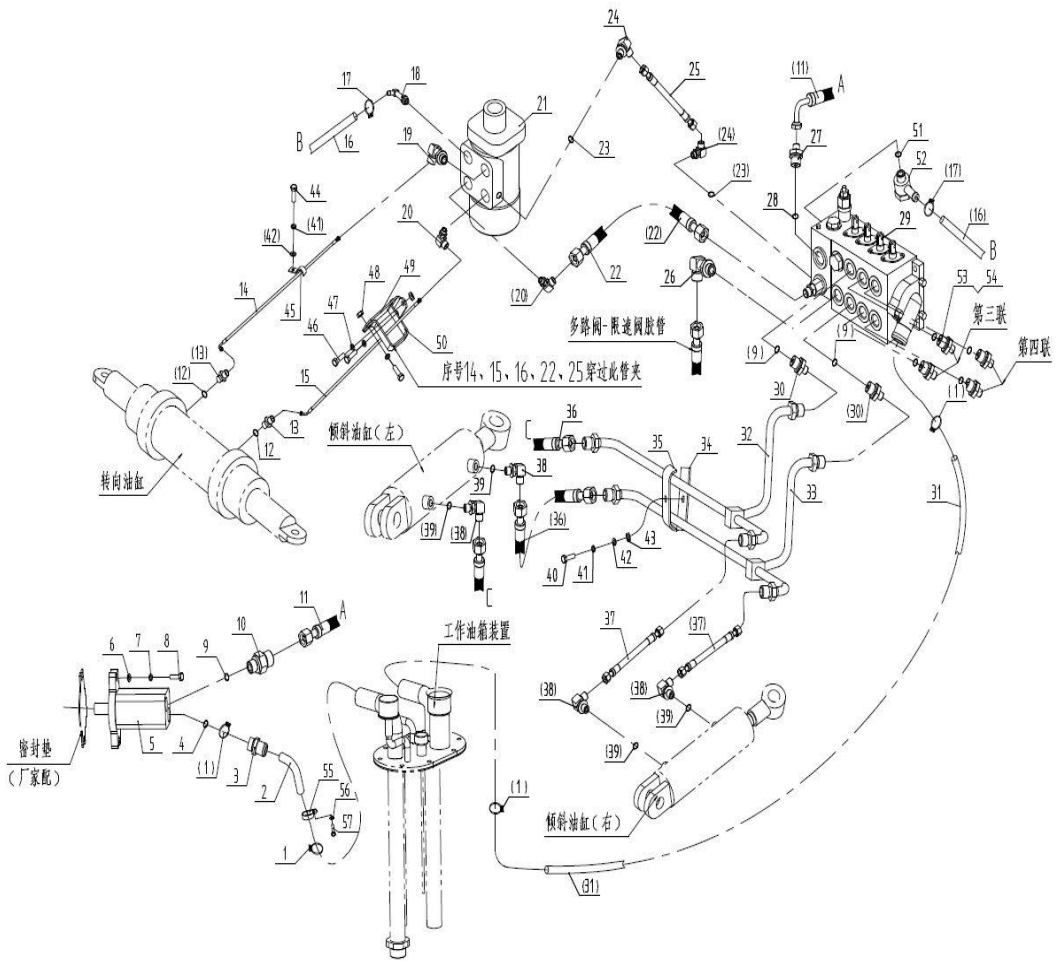

序号 Item No.	物料ID ID.	代号 Part No.	名称 Description	数量 Q'ty	备注 Remark
A	N/A	A30476-00000	Hydraulic system	1	2-3.5t
01	69052895	JB/T8870-32-44	Hose clamp Φ32-44	4	
02	69035705	A30476-00001/1	Pump suction pipe	1	YANMAR98、NISSAN K25
-	69042931	A30476-00001/2	Pump suction pipe	1	MITSUBISHI S4S
-	69047026	A30476-00001/3	Pump suction pipe	1	XINCHAI
-	69089218	A30476-00001/4A	Pump suction pipe	1	CA498
-	69076167	A30476-00001/5	Pump suction pipe	1	AEROSPACE MITSUBISHI 4G64
03	69001280	M3037600005	Pump suction fitting	1	
04	69124133	GB1235-35*3.5-G	O-ring 35*3.5	1	
05	69038406	A30476-05100	Gear pump	1	YANMAR98
-	69042598	A30476-05200	Gear pump	1	NISSAN K25、CA498、AEROSPACE MITSUBISHI 4G64
-	69047027	A30476-05300	Gear pump	1	XINCHAI
-	69059546	A30476-05400	Gear pump	1	MITSUBISHI S4S
06	69000250	GB/T97.1-10	Washer 10	2	
07	69000053	GB/T93-10	Washer 10	2	
08	69000130	GB/T5783-M10*35-8.8J	Bolt M10*35	2	
09	69022457	GB/T1235-24*2.4	O-ring 22*2.4	3	
10	69001278	M3037600004	Pump outlet fitting	1	
11	69035706	A30476-00002/1	Valve H.P. hose	1	YANMAR98、NISSAN K25、CA498、AEROSPACE MITSUBISHI 4G64
-	69042932	A30476-00002/2	Valve H.P. hose	1	MITSUBISHI S4S
-	69041922	35B76-00002	Valve H.P. hose	1	XINCHAI
12	69124124	GB1235-18*2.4-G	O-ring 18*2.4	2	
13	69003280	M3037600003	Steering cylinder connector	2	
14	69035707	A30476-00003	Steering cylinder H.P. hose Ⅰ	1	

图65/Fig65. 液压系统（硬连接）/HYDRAULIC SYSTEM（RIGIDITY JOINT）

FD20/25/30/35（T）、FG(L)20/25/30/35（T）

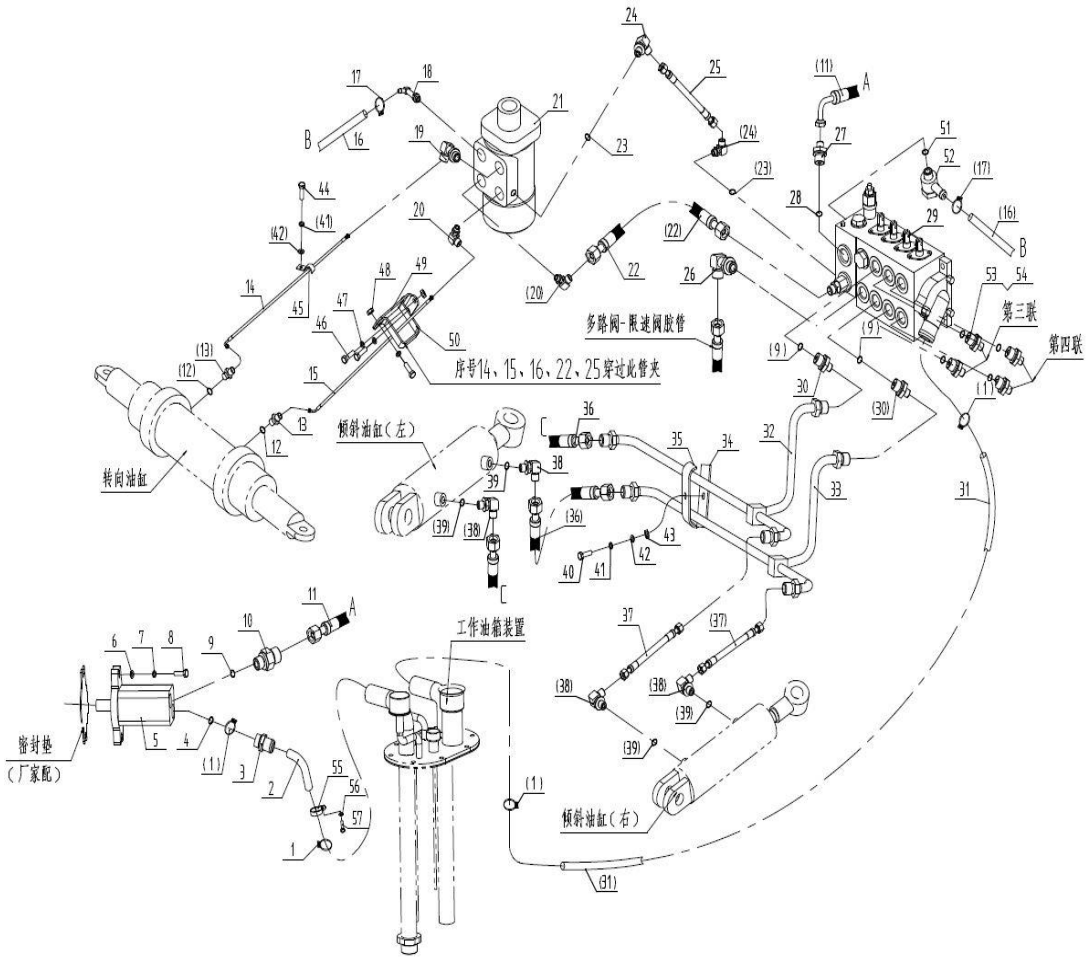

序号 Item No.	物料ID ID.	代号 Part No.	名称 Description	数量 Q'ty	备注 Remark
15	69035708	A30476-00004	Steering cylinder H.P. hose Ⅱ	1	
16	69106447	LS106447	Orbitrol oil returning pipe	500mm	
17	69036894	JB/T8870-16-25	Hose clamp Φ16-25	2	
18	69001503	M3037607000	Orbitrol pipe connector	1	
19	69035710	A30476-01000	Orbitrol connector Ⅰ	1	
20	69064780	A25776-02000	Orbitrol connector Ⅱ	2	
21	69069301	A30476-06000	Orbitrol	1	
22	69035712	A30476-00006	Orbitrol H.P. hose	1	
23	69134087	GB/T3452.1-8.5*2.65-G	O-ring 8.5x2.65	2	
24	69035500	25D76X-06000	Sensor connector	2	
25	69035713	A30476-00007	Sensor H.P. hose	1	
26	69003278	M3037601000	Valve connector(lift cylinder)	1	
27	69024858	45776-13000	Valve inlet connector	1	
28	69022457	GB/T1235-24*2.4	O-ring 24*2.4	1	
29	69027949	25D76X-02100	Multi-way valve	1	二联 TWO THROW
-	69027950	25D76X-02200	Multi-way valve	1	三联 THREE THROW
-	69027951	25D76X-02300	Multi-way valve	1	四联 FOUR THROW
30	69001303	M3037600012	Valve connector(tilting cylinder)	2	
31	69035714	A30476-00008	Return oil hose	1	
32	69035715	A30476-03000	Tilt cylinder pipe Ⅰ	1	
33	69035716	A30476-04000	Tilt cylinder pipe Ⅱ	1	
34	69003286	M2037600001	Clip Ⅰ	1	
35	69003446	M2037600002	Clip Ⅱ	1	
36	69001490	M3037600008	Tilt cylinder hose(front)	2	
37	69001399	MS1677600007	Tilt cylinder hose(rear)	2	

图65/Fig65. 液压系统（硬链接）/HYDRAULIC SYSTEM(RIGIDITY JOINT)

FD20/25/30/35（T）、FG(L)20/25/30/35（T)

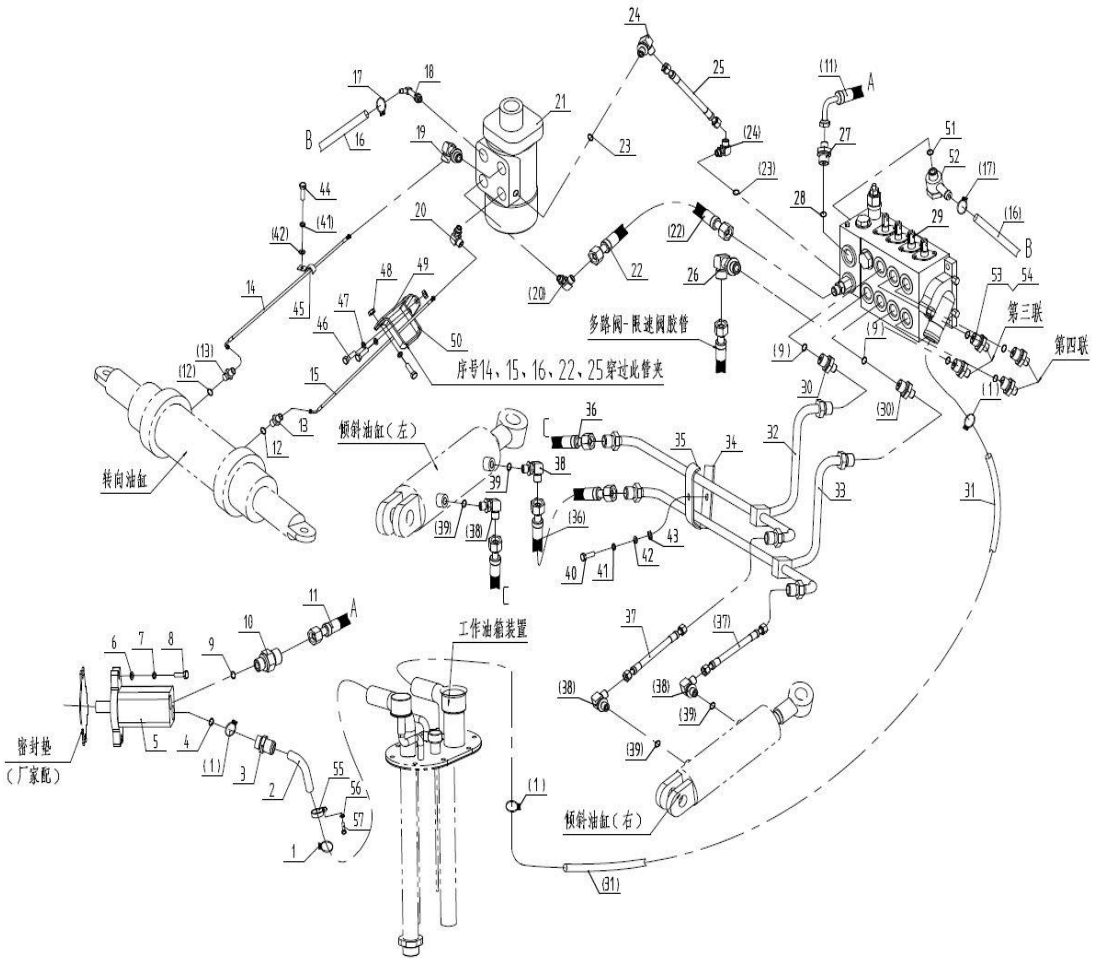

序号 Item No.	物料ID ID.	代号 Part No.	名称 Description	数量 Q'ty	备注 Remark
38	69003277	M3037602000	Tilt cylinder connector	4	
39	69011421	GB1235-11.2*2.4	O-ring11.2*2.4	4	
40	69000194	GB/T5783-M6*25-8.8J	Bolt M6*25	1	
41	69000060	GB/T93-6	Washer 6	4	
42	69000258	GB/T97.1-6	Washer 6	4	
43	69000111	GB/T6170-M6-8J	Nut M6	1	
44	69000189	GB/T5783-M6*12-8.8J	Bolt M6*12	3	
45	69001685	M3037600023	Clip	3	
46	69000198	GB/T5783-M8*20-8.8J	Bolt M8*20	3	
47	69000062	GB/T93-8	Washer 8	3	
48	69000111	GB/T6170-M6-8J	Nut M6	3	
49	69041115	A30476-00009	Fixed plate	1	
50	69041116	A30476-00010	Clip	1	
51	69000355	JB/T982-16	Combination gasket 16	2	
52	N/A	25D76X-04000	Hinge bolt	1	厂家自带（取消）cancel
53	69001504	M3037600021	Orbitrol connector	2	三联 THREE THROW
54	69001504	M3037600021	Orbitrol connector	4	四联 FOUR THROW
56	69087375	GMS-DJR50	Clip	2	MITSUBISHI S4S
56	69000258	GB/T97.1-6	Washer 6	2	MITSUBISHI S4S
57	69000189	GB/T5783-M6*12-8.8J	Bolt M6*12	2	MITSUBISHI S4S

图66/Fig66. 变矩器油冷系统/TOR-CON OIL COOLING SYSTEM

FD20/25/30/35T-AWE5、FD20/25/30/35T-AWV

FG(L)20/25/30/35T-AWA、FG(L)20/25/30/35T-AWG

FD20/25/30/35T-AG(1)

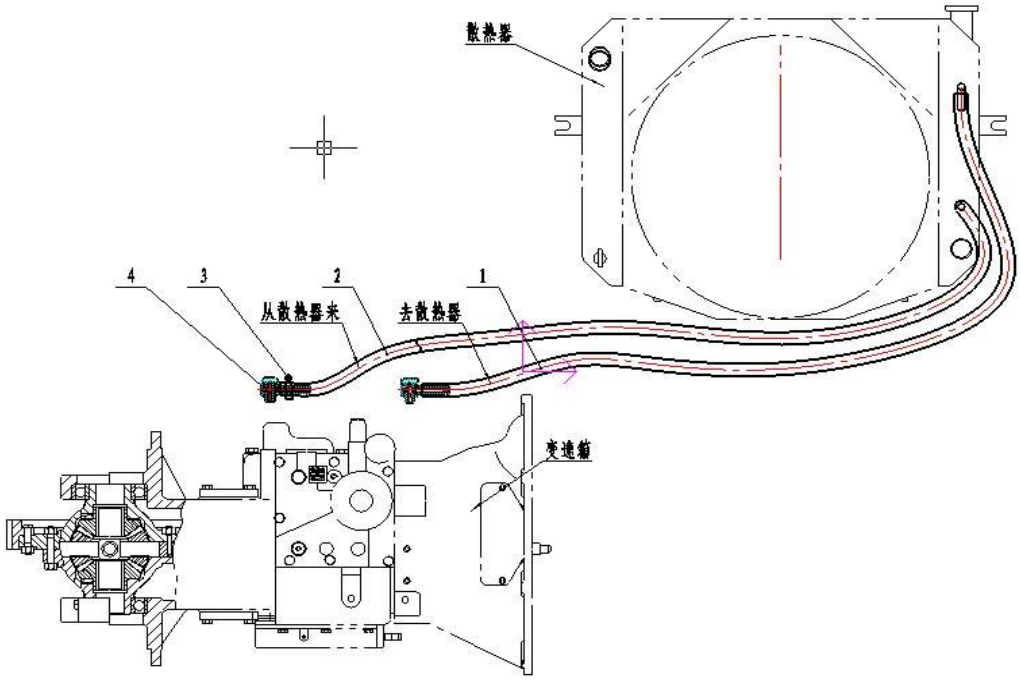

序号 Item No.		代号 Part No.	名称 Description	数量 Q'ty	备注 Remark
A		-	TOR-CON OIL COOLING SYSTEM	1	
01	69036925	LS36925/A30447-00002	Tor-con hose φ11×5-1400	1	ID号为整卷油管原材料号
02	69036925	LS36925/A30447-00001	Tor-con hose φ11×5-1300	1	ID号为整卷油管原材料号
03	69036894	JB/T8870-16-25	Hose clamp d25	4	
04	69036700	M30447-01000	Hinge bolt	2	

图67/Fig67. 门架管路系统(基本型二联)/MAST HYDRAULIC SYSTEM(NORMAL MAST TWO THROW)

FD20/25/30/35（T）、FG(L)20/25/30/35（T)

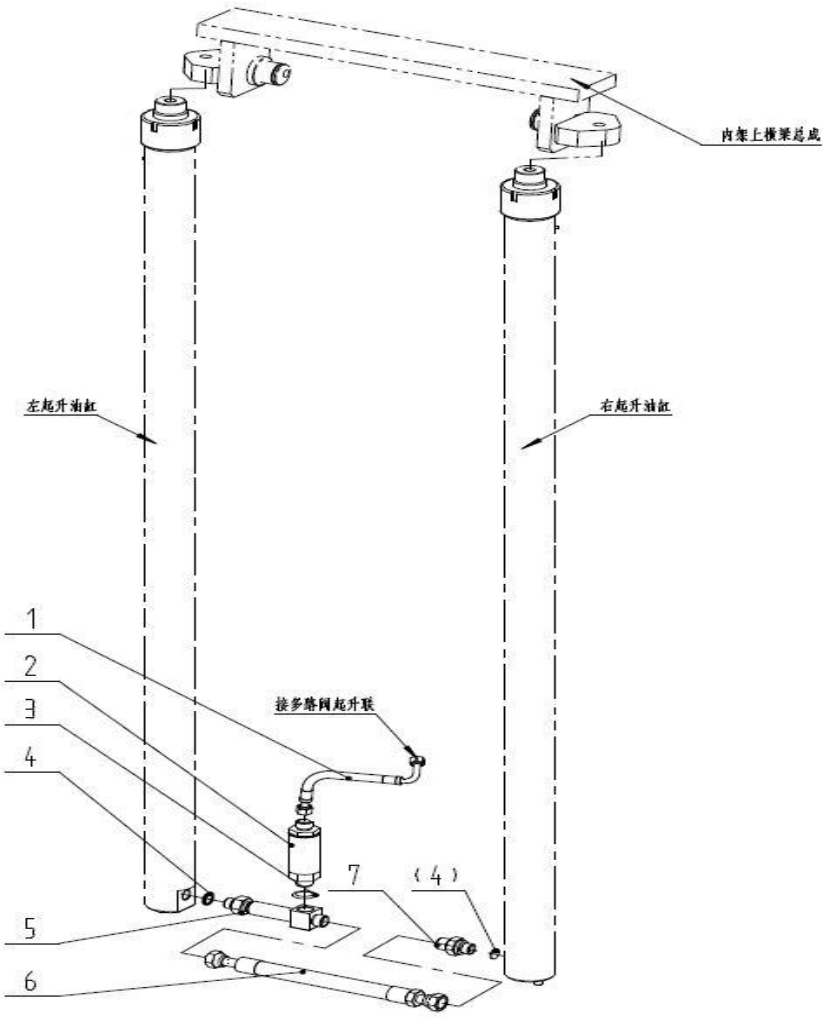

序号	物料ID	代号	名称	数量	备注
Item No.	ID.	Part No.	Description	Q' ty	Remark
A	N/A	-	Mast Hydraulic Piping System	1	2-3.5t
1	69011952	30386-00003	Flow regulator H.P. hose Ⅱ	1	
2	69002920	20386-01000	Flow regulator	1	2-2.5t
-	69002922	30386-03000	Flow regulator	1	3t
-	69002923	35386-02000	Flow regulator	1	3.5t
3	69022457	GB/T1235-24*2.4	O-ring 24x2.4	1	
4	69124142	GB/T3452.1-17*2.65-G	O-ring 17x2.65	1	2-3t
-	69124132	GB1235-30*3.5-G	O-ring 30x3.5	2	3.5t
5	69016646	30386-01000	Lift cylinder tee connector	1	2-3t
-	69016648	35386-01000	Lift cylinder tee connector	1	3.5t
6	69001331	30386-00001	Lift cylinder H.P. hose13Ⅱ-370	1	2-2.5t
-	69034147	A30486-00001	Lift cylinder H.P. hose13Ⅱ-380	1	3.0t
-	69126607	S30488-00002	Lift cylinder H.P. hose13Ⅱ-385	1	3.5t
7	69006260	30388-00005	Lift cylinder connector	1	3.5t（厂家自带，取消）

图68/Fig68. 门架管路系统(基本型三联)/MAST HYDRAULIC SYSTEM(NORMAL MAST THREE-THROW)

FD20/25/30/35（T）、FG(L)20/25/30/35（T）

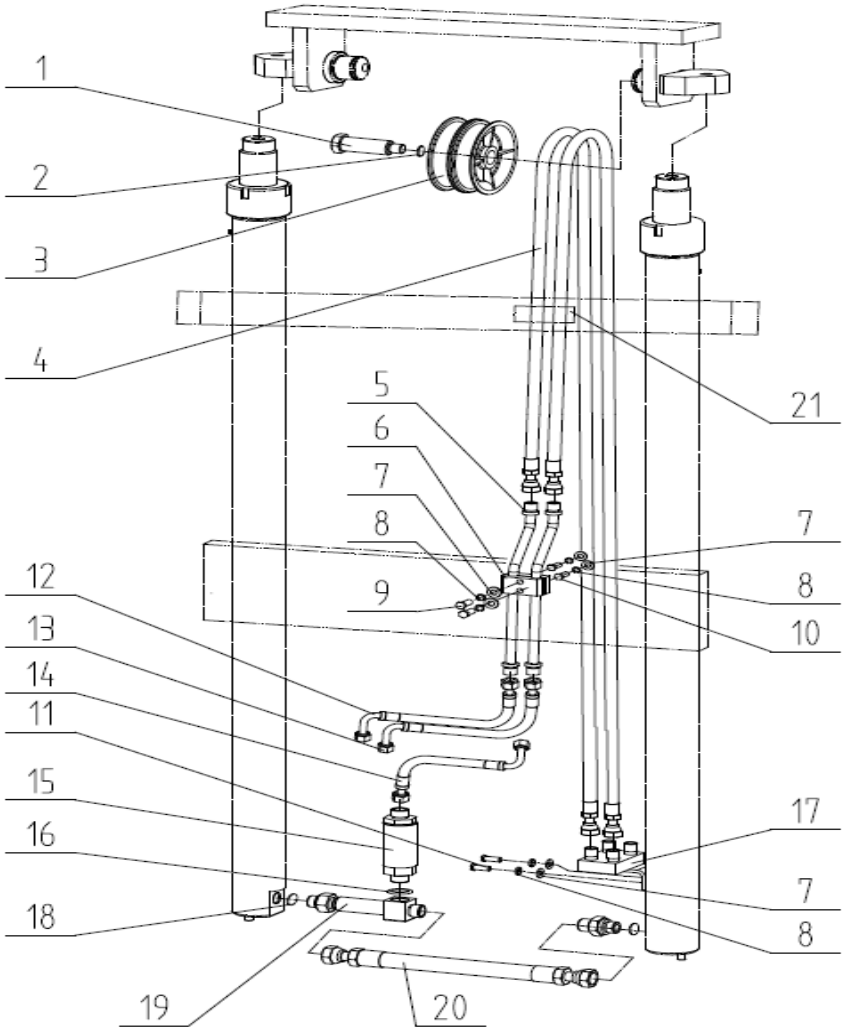

序号	物料ID	代号	名称	数量	备注
Item No.	ID.	Part No.	Description	Q' ty	Remark
A	N/A	-	Mast Hydraulic Piping system	1	2-3.5t
1	69016660	30386S-00003	Step bolt	1	
2	69000579	30386S-00004(8)	Spacer	3	
3	69016659	30386S-00002	Pulley	2	
4	N/A	A20486S-01000	Side shift H.P.hose	2	2-2.5t AS NEEDED
-	N/A	A30486S-01000	Side shift H.P.hose	2	3t AS NEEDED
-	N/A	A35486S-01000	Side shift H.P.hose	2	3.5t AS NEEDED
5	69034148	A30486S-02000	Adjusting pipe	2	2-3t
-	69016675	30386S-02000	Adjusting pipe	2	3.5t
6	69066451	30386S-00001/A	Clip	1	
-	69066450	30386S-00001/B	Clip	1	
7	69000259	GB/T97.1-8	Washer 8	6	
8	69000062	GB/T93-8	Washer 8	6	
9	69000203	GB/T5783-M8*30-8.8J	Bolt M8x30	2	
10	69000200	GB/T5783-M8*25-8.8J	Bolt M8x25	2	
11	69000309	GB/T5783-M8*16-8.8J	Bolt M8x16	2	
12	69016665	30386S-00005	Multi-valve adjusting pipe H.P.hose Ⅰ	1	
13	69016666	30386S-00006	Multi-valve adjusting pipe H.P.hose Ⅱ	1	
14	69011952	30386-00003	Multi-valve flow regulator H.P. hose Ⅱ	1	
15	69002920	20386-01000	Flow regulator	1	2-2.5t
-	69002922	30386-03000	Flow regulator	1	3t
-	69002923	35386-02000	Flow regulator	1	3.5t
16	69022457	GB/T1235-24*2.4	O-ring 24x2.4	1	
17	69012313	30386S-03000	Cross connector Ⅰ	1	2-3t
-	69020958	35386S-02000	Cross connector	1	3.5t

图68/Fig68. 门架管路系统(基本型三联)/MAST HYDRAULIC SYSTEM(NORMAL MAST THREE-THROW)

FD20/25/30/35（T）、FG(L)20/25/30/35（T）

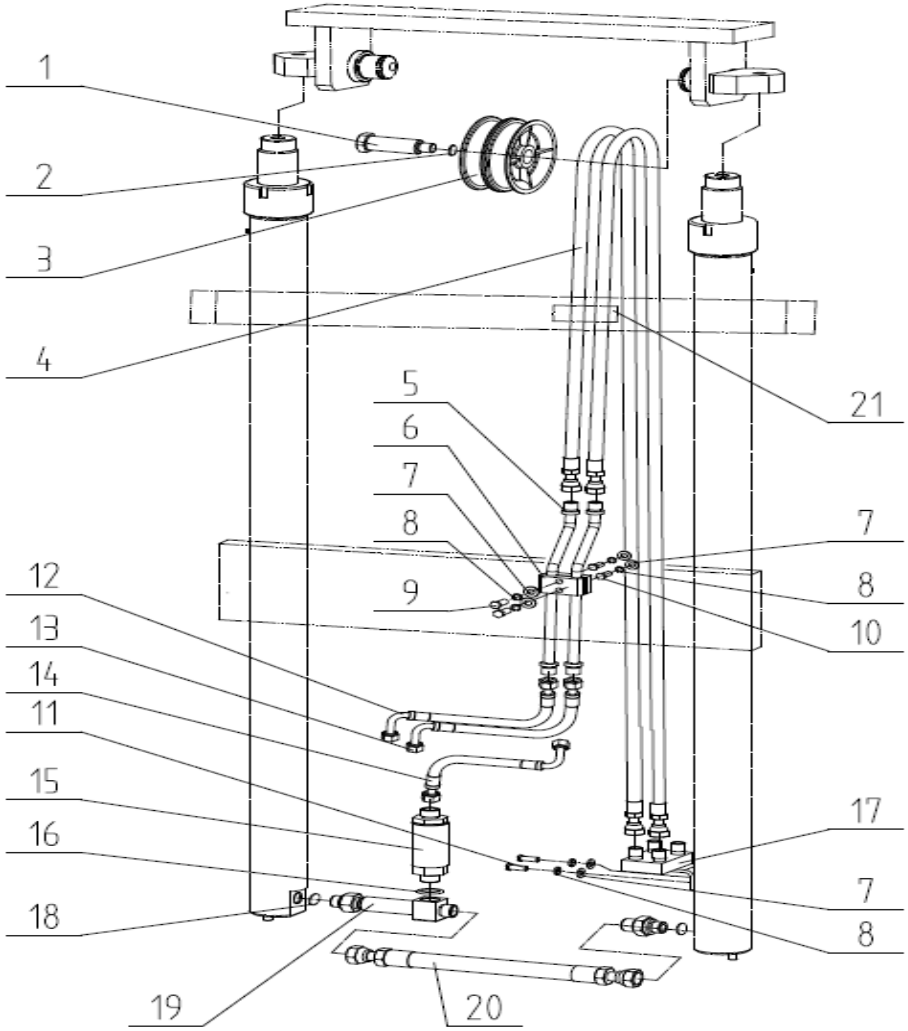

序号	物料ID	代号	名称	数量	备注
Item No.	ID.	Part No.	Description	Q' ty	Remark
18	69124142	GB/T3452.1-17*2.65-G	O-ring 17x2.65	1	2-3t
-	69124132	GB1235-30*3.5-G	O-ring 30x3.5	2	3.5t
19	69016646	30386-01000	Lift cylinder tee connector	1	2-3t
-	69016648	35386-01000	Lift cylinder tee connector	1	3.5t
20	69001331	30386-00001	H.P. hose between lift cylinders13Ⅱ-370	1	2-2.5t
-	69034147	A30486-00001	H.P. hose between lift cylinders13Ⅱ-380	1	3.0t
-	69126607	S30488-00002	H.P. hose between lift cylinders13Ⅱ-385	1	3.5t
22	69069602	S30488S-00003	Clip SHTPG2-215	1/2	≥4m/≥5.5m

图68/Fig68. 门架管路系统(基本型三联)/MAST HYDRAULIC SYSTEM(NORMAL MAST THREE-THROW)

FD20/25/30/35（T）、FG(L)20/25/30/35（T）

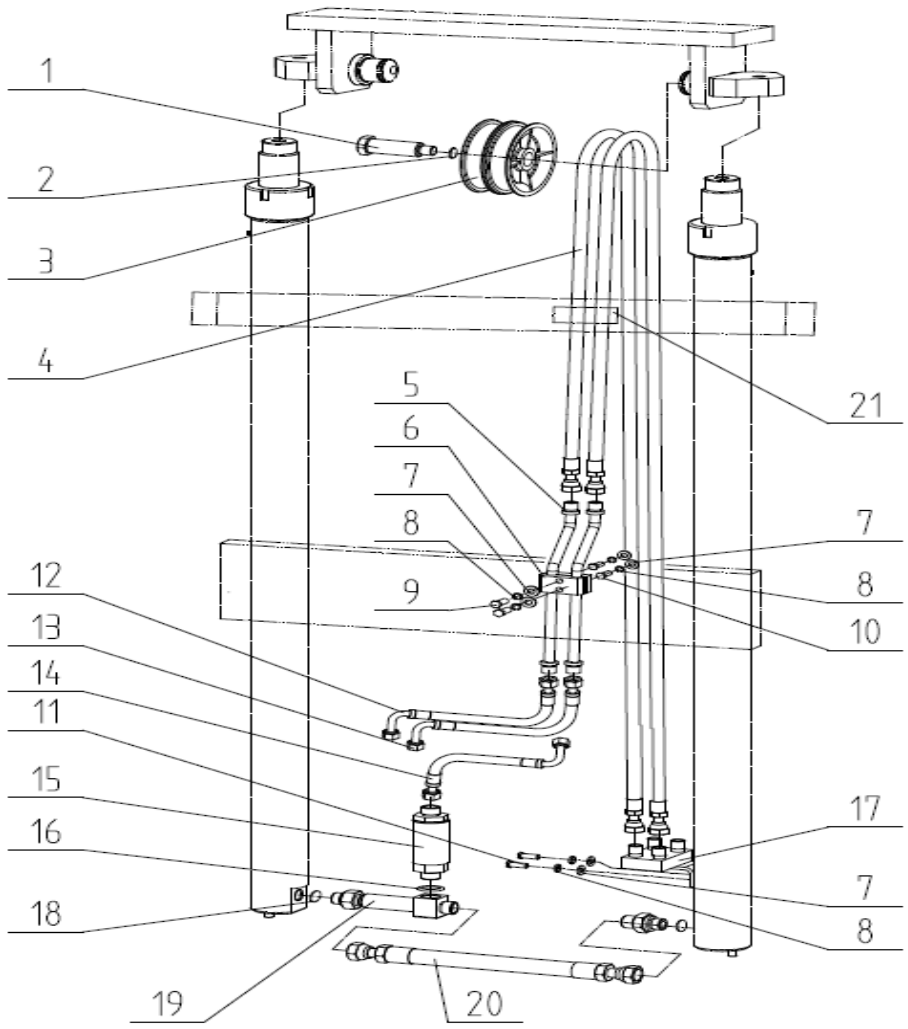

管路系统选用件-侧移胶管(件4)
Mast Piping Optional Parts

起升高度 LIFTING HEIGHT	2-2.5t		3t	3.5t	
	ID.	A20486S-01000 PLASTIC HOSE	ID.	ID.	A35486S-01000 PLASTIC HOSE
2000	69036320	A30487S-05002	69012995	7E+07	30387S-01009
2500	69016819	30388SS-02005	69017070	7E+07	30387S-02009
2700	69016785	30388S-02003	69016786	7E+07	20388SS-01009
3000	69016629	20388S-01007	69016629	7E+07	30388S-01004
3300	69016805	30388SS-01004	69017032	7E+07	30387S-02012
3500	69016793	30388S-02010	69016651	7E+07	20388S-01011
3600	69016892	35388S-01006	69018307	7E+07	30386S-01010
3700	69017074	30386S-01010	69016652	7E+07	30388S-01008
4000	69016906	35388SS-01007	69016653	7E+07	30388S-01009
4250	69042062	A20486S-01002	69016810	7E+07	35386S-01014
4500	69042063	A20486S-01003	69016654	7E+07	A35486S-01001
4750	69042064	A20486S-01004	69017067	7E+07	A35486S-01002
5000	69042065	A20486S-01005	69016655	7E+07	A35486S-01003
5500	69042066	A20486S-01006	69016656	7E+07	A35486S-01004
6000	69042067	A20486S-01007	69016657	7E+07	A35486S-01005

图69/Fig69. 门架管路系统(基本型四联)/MAST HYDRAULIC SYSTEM(NORMAL MAST FOUR THROW)

FD20/25/30/35（T）、FG(L)20/25/30/35（T）

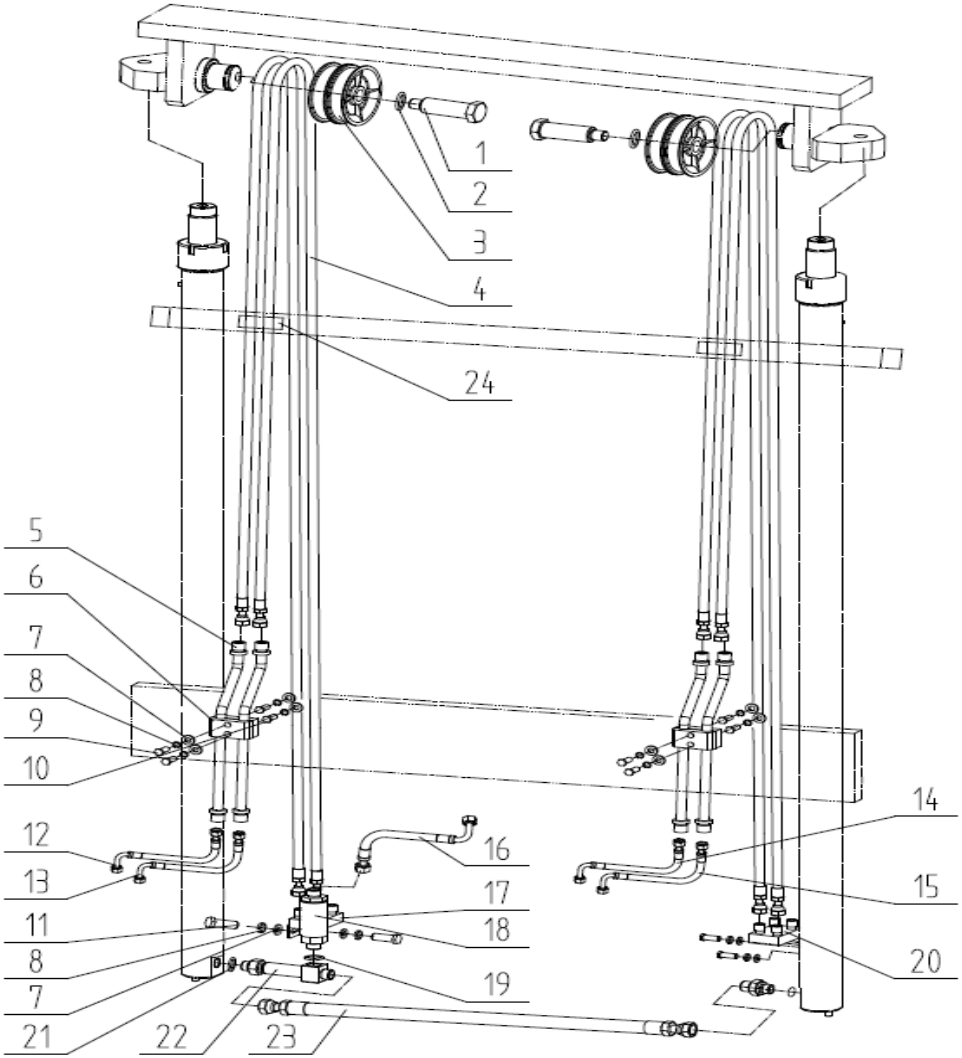

序号	物料ID	代号	名称	数量	备注
Item No.	ID.	Part No.	Description	Q' ty	Remark
A	N/A	-	Mast Hydraulic Piping system	1	2-3.5t
1	69016660	30386S-00003	Step bolt	2	
2	69000579	30386S-00004(8)	Spacer	6	
3	69016659	30386S-00002	Pulley	4	
4	N/A	A20486S-01000	Side shift H.P.hose	4	2-2.5t AS NEEDED
-	N/A	A30486S-01000	Side shift H.P.hose	4	3t AS NEEDED
-	N/A	A35486S-01000	Side shift H.P.hose	4	3.5t AS NEEDED
5	69034148	A30486S-02000	Adjusting pipe	4	2-3t
-	69016675	30386S-02000	Adjusting pipe	4	3.5t
6	69066451	30386S-00001/A	Clip	2	
-	69066450	30386S-00001/B	Clip	2	
7	69000259	GB/T97.1-8	Washer 8	12	
8	69000062	GB/T93-8	Washer 8	12	
9	69000203	GB/T5783-M8*30-8.8J	Bolt M8x30	4	
10	69000200	GB/T5783-M8*25-8.8J	Bolt M8x25	4	
11	69000309	GB/T5783-M8*16-8.8J	Bolt M8x16	4	
12	69018461	20386SS-00002	Multi-valve adjusting pipe H.P.hose Ⅱ	1	2-2.5t
-	69016682	30386SS-00002	Multi-valve adjusting pipe H.P.hose Ⅱ	1	3-3.5t
13	69018460	20386SS-00001	Multi-valve adjusting pipe H.P.hose Ⅰ	1	2-2.5t
-	69016680	30386SS-00001	Multi-valve adjusting pipe H.P.hose Ⅰ	1	3-3.5t
14	69016665	30386S-00005	Multi-valve adjusting pipe H.P.hose Ⅰ	1	
15	69016666	30386S-00006	Multi-valve adjusting pipe H.P.hose Ⅱ	1	
16	69011952	30386-00003	Multi-valve flow regulator H.P. hose Ⅱ	1	
17	69012312	30386SS-01000	Cross connector Ⅱ	1	2-3t
-	69020959	35386SS-01000	Cross connector	1	3.5t

图69/Fig69. 门架管路系统(基本型四联)/MAST HYDRAULIC SYSTEM(NORMAL MAST FOUR THROW)

FD20/25/30/35（T）、FG(L)20/25/30/35（T)

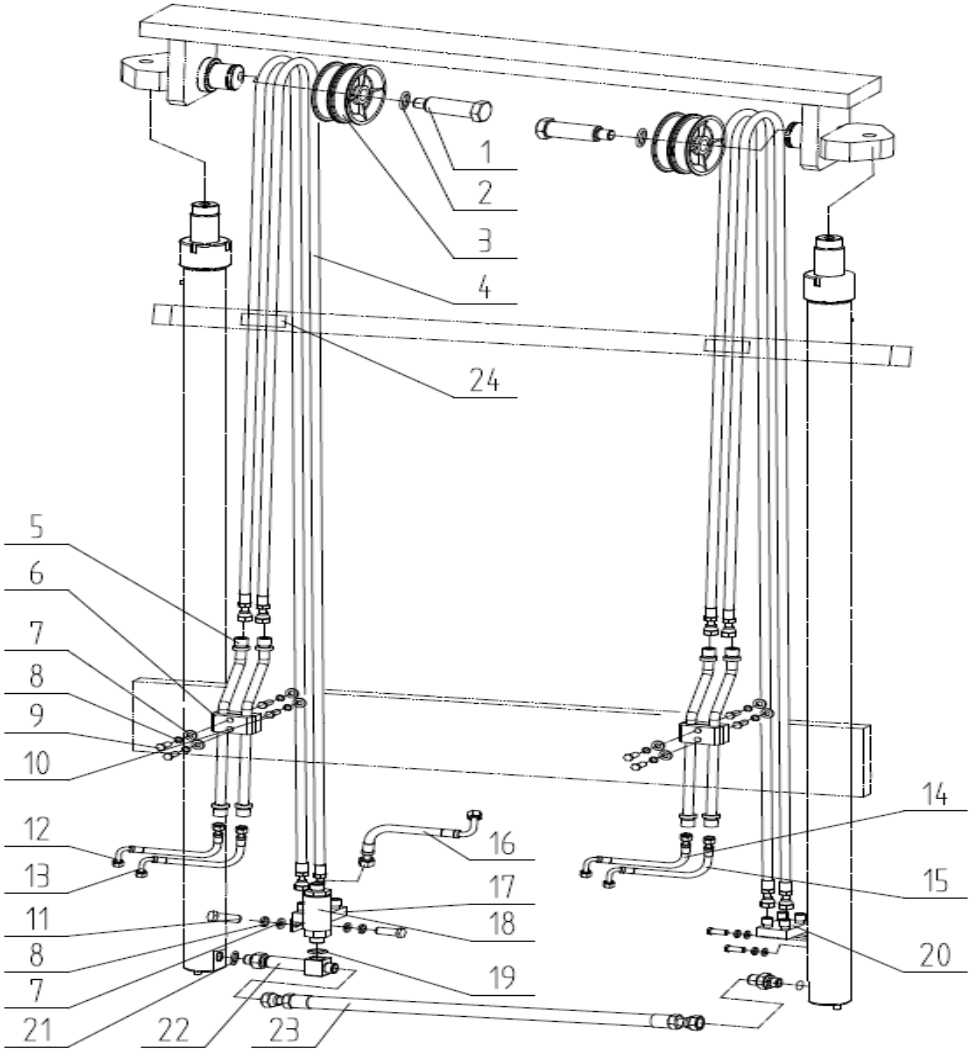

序号	物料ID	代号	名称	数量	备注
Item No.	ID.	Part No.	Description	Q' ty	Remark
18	69002920	20386-01000	Flow regulator	1	2-2.5t
-	69002922	30386-03000	Flow regulator	1	3t
-	69002923	35386-02000	Flow regulator	1	3.5t
19	69022457	GB/T1235-24*2.4	O-ring 24x2.4	1	
20	69012313	30386S-03000	Cross connector	1	2-3t
-	69020958	35386S-02000	Cross connector	1	3.5t
21	69124142	GB/T3452.1-17*2.65-G	O-ring 17x2.65	1	2-3t
-	69124132	GB1235-30*3.5-G	O-ring 30x3.5	2	3.5t
22	69016646	30386-01000	Lift cylinder tee connector	1	2-3t
-	69016648	35386-01000	Lift cylinder tee connector	1	3.5t
23	69001331	30386-00001	H.P. hose between lift cylinders13Ⅱ-370	1	2-2.5t
-	69034147	A30486-00001	H.P. hose between lift cylinders13Ⅱ-380	1	3.0t
-	69126607	S30488-00002	H.P. hose between lift cylinders13Ⅱ-385	1	3.5t
24	69069602	S30488S-00003	Clip SHTPG2-215	2/4	≥4m/≥5.5m

图70/Fig70. 门架管路系统(二级全自由二联)/ MAST HYDRAULIC SYSTEM(FULL FREE 2-STAGE MAST TWO THROW)

FD20/25/30/35（T）、FG(L)20/25/30/35（T)

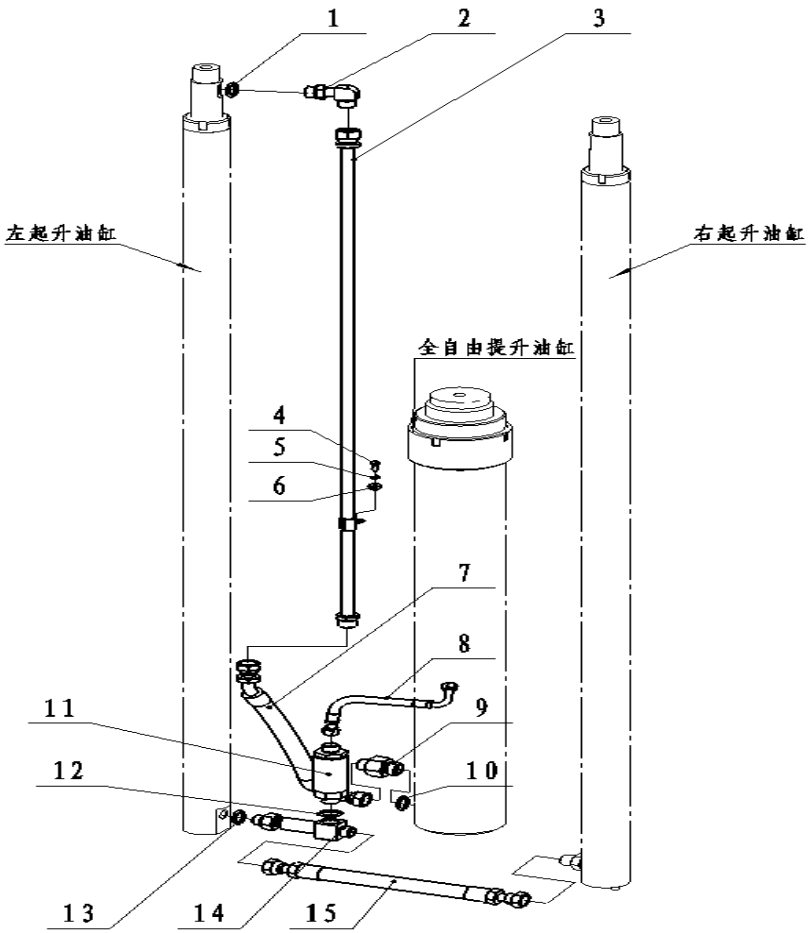

序号	物料ID	代号	名称	数量	备注
Item No.	ID.	Part No.	Description	Q' ty	Remark
A	N/A	-	Mast hydraulic system	1	2-3.5t
1	69124144	GB/T3452.1-19*2.65-G	O-ring 19*2.65	1	
2	69003137	M3077601000	Pipe connector	1	
3	N/A	A20487-01000	Pipe ass'y	1	2-2.5t AS NEEDED
-	N/A	A30487-02000	Pipe ass'y	1	3t AS NEEDED
-	N/A	A35487-01000	Pipe ass'y	1	3.5t AS NEEDED
4	69000309	GB/T5783-M8*16-8.8J	Bolt M8*16	1	
5	69000259	GB/T97.1-8	Washer 8	1	
6	69000062	GB/T93-8	Washer 8	1	
7	69016686	30387-00001	H.P.hose between pipe and middle cylinder	1	
8	69011952	30386-00003	Multi-valve flow regulator H.P. hose Ⅱ	1	
9	69012037	30387-00003	Middle cylinder connector	1	
10	69124132	GB1235-30*3.5-G	O-ring 30*3.5	1	
11	69002920	20386-01000	Flow regulator	1	2-2.5t
-	69002922	30386-03000	Flow regulator	1	3t
-	69002923	35386-02000	Flow regulator	1	3.5t
12	69022457	GB/T1235-24*2.4	O-ring 24*2.4	1	
13	69124142	GB/T3452.1-17*2.65-G	O-ring 17*2.65	1	
14	69016646	30386-01000	Lift cylinder tee connector	1	
15	69001331	30386-00001	H.P. hose between lift cylinders13Ⅱ-370	1	2-2.5t
-	69034147	A30486-00001	H.P. hose between lift cylinders13Ⅱ-380	1	3.0t
-	69126607	S30488-00002	H.P. hose between lift cylinders13Ⅱ-385	1	3.5t

图70/Fig70. 门架管路系统(二级全自由二联)/ MAST HYDRAULIC SYSTEM(FULL FREE 2-STAGE MAST TWO THROW)

FD20/25/30/35（T）、FG(L)20/25/30/35（T)

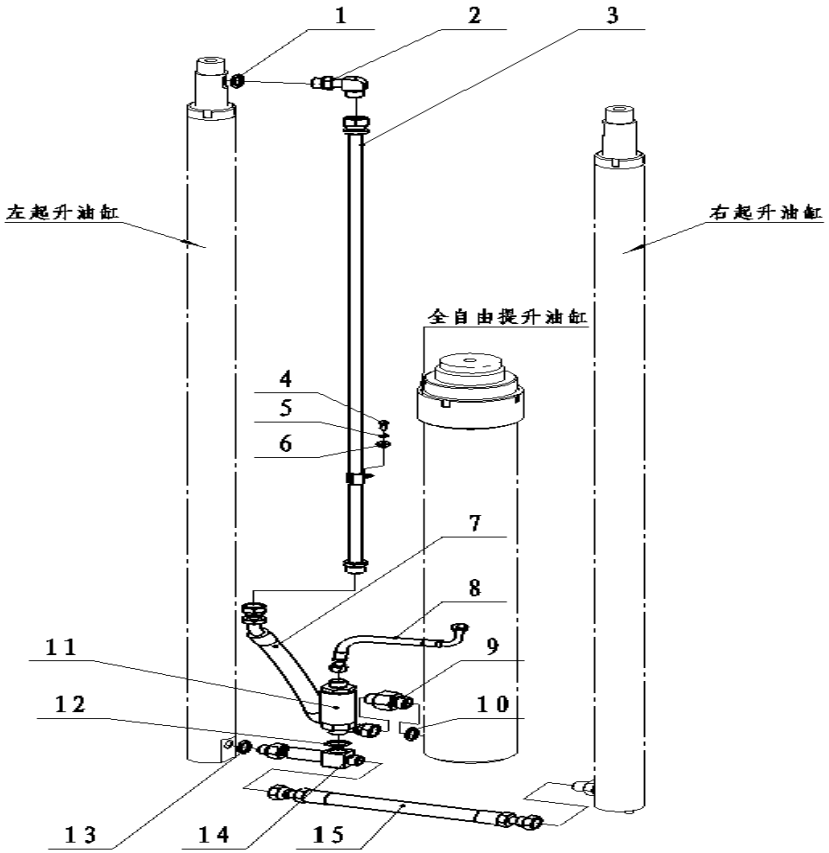

管路系统选用件-硬管总成(件3)
Mast Piping Optional Parts

起升高度 LIFTING HEIGHT	2-2.5t		3.0t	3.5t	
	ID.	A20487-01000 PLASTIC HOSE	ID.	ID.	A35487-01000 PLASTIC HOSE
3000	69055765	A20487-01001	69034174	7E+07	A35487-01001
3300	69055766	A20487-01002	69034175	7E+07	A35487-01002
3500	69055767	A20487-01003	69034176	7E+07	A35487-01003
3700	69055768	A20487-01004	69034177	7E+07	A35487-01004
4000	69055769	A20487-01005	69034178	7E+07	A35487-01005
4500	69055770	A20487-01006	69034179	7E+07	A35487-01006
5000	69055771	A20487-01007	69034180	7E+07	A35487-01007
5500	69055772	A20487-01008	69034181	7E+07	A35487-01008
6000	69055773	A20487-01009	69034182	7E+07	A35487-01009

图71/Fig71. 门架管路系统(二级全自由三联) MAST HYDRAULIC SYSTEM(FULL FREE 2-STAGE MAST THREE THROW)

FD20/25/30/35（T）、FG(L)20/25/30/35（T）

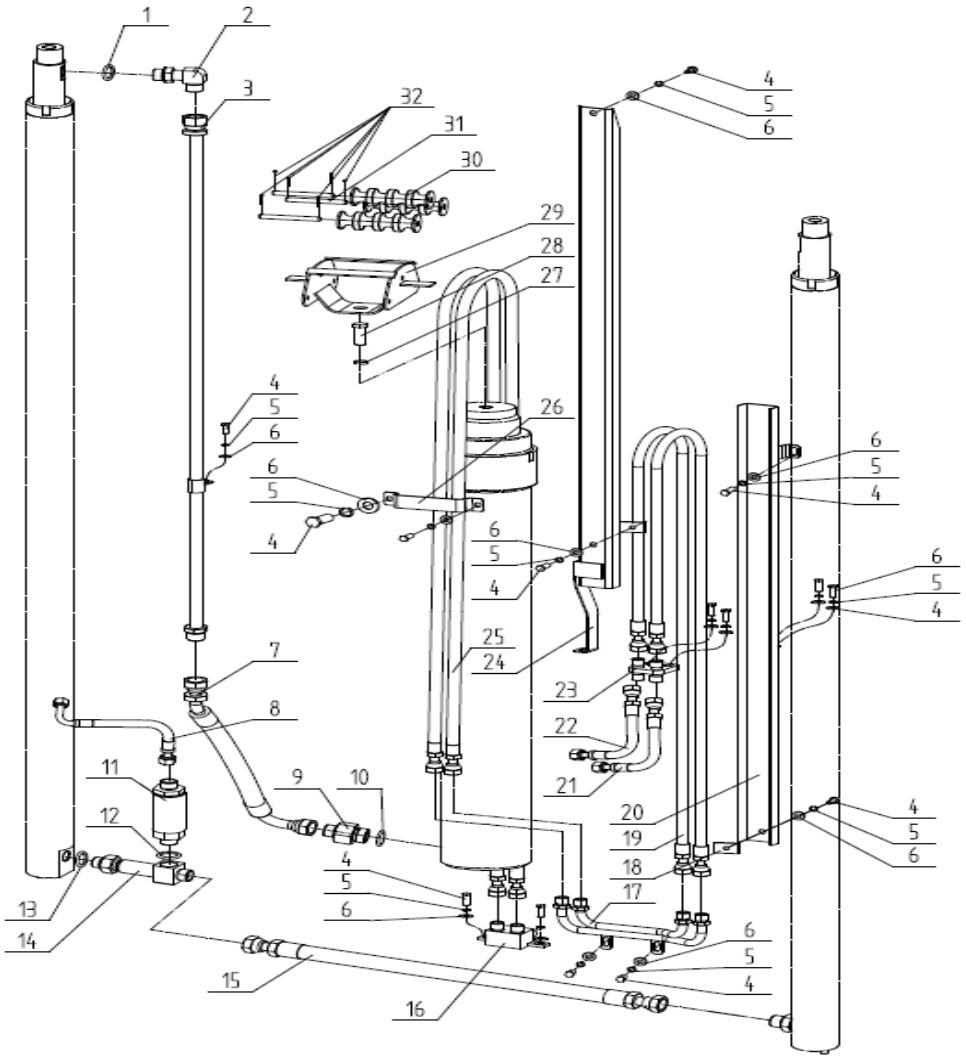

序号	物料ID	代号	名称	数量	备注
Item No.	ID.	Part No.	Description	Q' ty	Remark
A	N/A	-	Mast Hydraulic Piping system	1	2-3.5t
1	69124144	GB/T3452.1-19*2.65-G	O-ring 19*2.65	1	
2	69003137	M3077601000	Pipe connector	1	
3	N/A	A20487-01000	Pipe ass'y	1	2-2.5t AS NEEDED
-	N/A	A30487-02000	Pipe ass'y	1	3t AS NEEDED
-	N/A	A35487-01000	Pipe ass'y	1	3.5t AS NEEDED
4	69000309	GB/T5783-M8*16-8.8J	Bolt M8*16	14	
5	69000259	GB/T97.1-8	Washer 8	14	
6	69000062	GB/T93-8	Washer 8	14	
7	69015804	15387-00001	H.P. Hose between pipe and middle cylinder	1	
8	69011952	30386-00003	Flow regulator H.P. hose Ⅱ	1	
9	69012037	30387-00003	Middle cylinder connector	1	
10	69124132	GB1235-30*3.5-G	O-ring 30*3.5	1	
11	69002920	20386-01000	Flow regulator	1	2-2.5t
-	69002922	30386-03000	Flow regulator	1	3t
-	69002923	35386-02000	Flow regulator	1	3.5t
12	69022457	GB/T1235-24*2.4	O-ring 24*2.4	1	
13	69124142	GB/T3452.1-17*2.65-G	O-ring17*2.65	1	
14	69016646	30386-01000	Lift cylinder tee connector	1	
15	69001331	30386-00001	H.P. hose between lift cylinders13Ⅱ-370	1	2-2.5t
-	69034147	A30486-00001	H.P. hose between lift cylinders13Ⅱ-380	1	3.0t
-	69126607	S30488-00002	H.P. hose between lift cylinders13Ⅱ-385	1	3.5t
16	69012712	30387S-08000	Cross connectorⅡ	1	
17	69034163	A30487S-04000	Connecting pipe	1	
18	69056648	30387S-07001	Bottom Plate	2	

图71/Fig71. 门架管路系统(二级全自由三联) MAST HYDRAULIC SYSTEM(FULL FREE 2-STAGE MAST THREE THROW)

FD20/25/30/35（T）、FG(L)20/25/30/35（T）

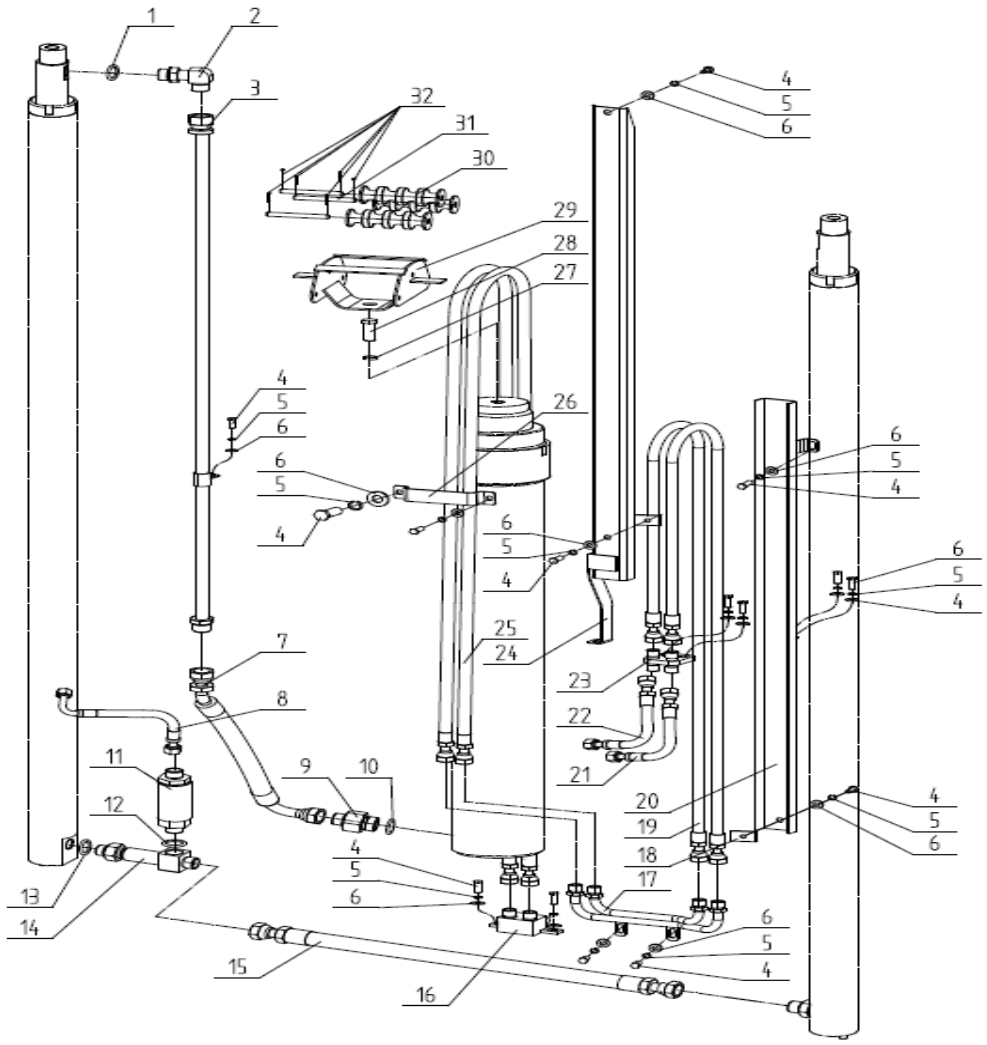

序号	物料ID	代号	名称	数量	备注
Item No.	ID.	Part No.	Description	Q' ty	Remark
19	N/A	A30487S-05000	Cross H.P.hose	2	
20	N/A	A30487S-03000	Guider ass'y(right)Ⅱ	1	AS NEEDED
21	69034160	A30487S-00001	Multi-valve -Cross H.P.hose Ⅰ	2	1
22	69034161	A30487S-00002	Multi-valve -Cross H.P.hose Ⅱ	2	1
23	69034162	A30487S-01000	Cross connector	1	
24	N/A	A20487S-01000	Guider ass'y(right) Ⅰ	1	2.5t AS NEEDED
-	N/A	A30487S-02000	Guider ass'y(right) Ⅰ	1	3t AS NEEDED
-	N/A	A35487S-01000	Guider ass'y(right) Ⅰ	1	3.5t AS NEEDED
25	N/A	A20487S-02000	Side shift H.P.hose	2	2.5t AS NEEDED
-	N/A	A30487S-06000	Side shift H.P.hose	2	3t AS NEEDED
-	N/A	A35487S-02000	Side shift H.P.hose	2	3.5t AS NEEDED
26	69042096	A30488S-00002	Pipe clamp	1	
27	69000056	GB/T93-16	Washer 16	1	
28	69000176	GB/T5783-M16*80-8.8J	Bolt M16*80	1	
29	69115099	A30488S-01000A-Black	Roller bracket	1	
30	69123554	A30488S-00001B	Pulley	3	
31	69042097	GB/T880-Φ8*120	Shaft Φ8*120	3	
32	69005787	GB/T91-2*16	Cotter pin 2*16	6	

图71/Fig71. 门架管路系统(二级全自由三联) MAST HYDRAULIC SYSTEM(FULL FREE 2-STAGE MAST THREE THROW)

FD20/25/30/35（T）、FG(L)20/25/30/35（T）

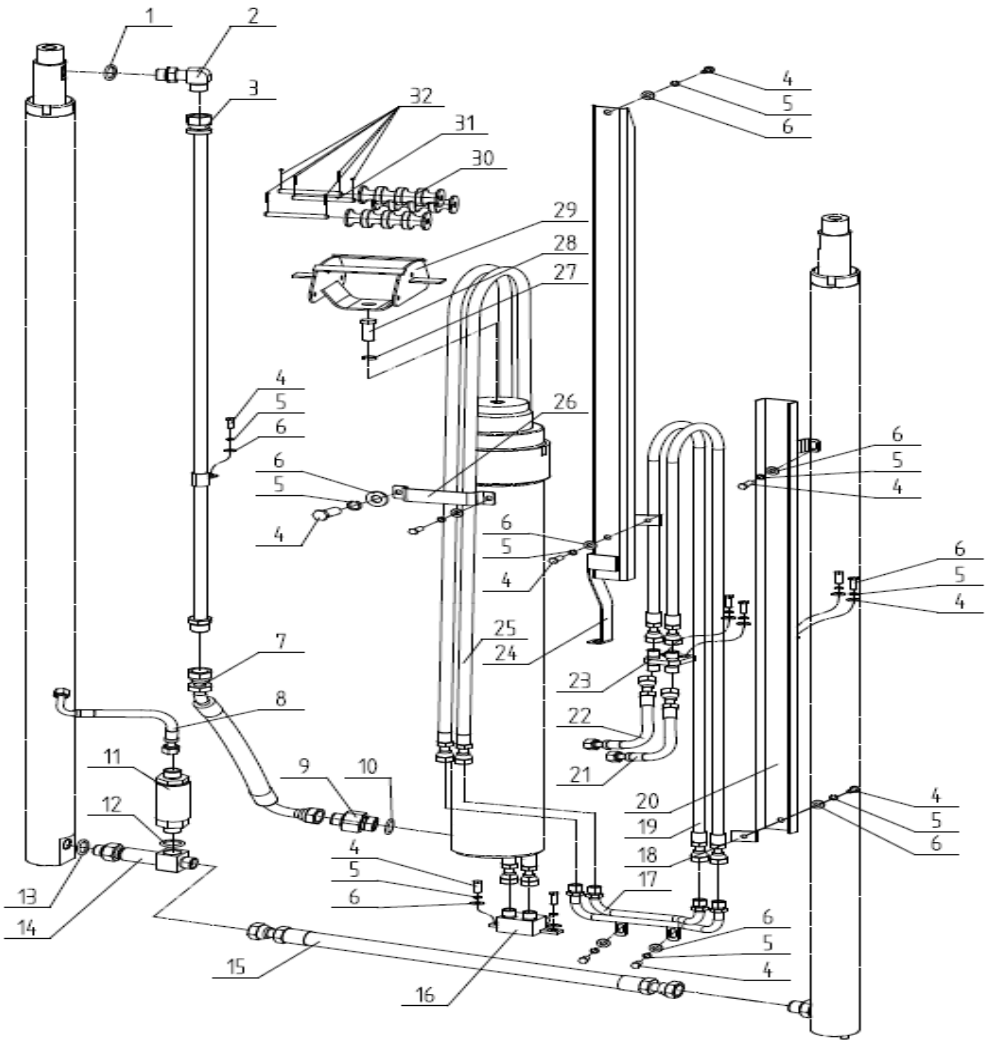

管路系统选用件-四通-转接硬管胶管(件19)
Mast Piping Optional Parts

起升高度 LIFTING HEIGHT	ID.	A30487S-05000 图号-长度 PLASTIC HOSE		备注 REMARK
3000	69036319	A30487S-05001		标准 Standard
3300	69036320	A30487S-05002		
3500	69036321	A30487S-05003		
3700	69016866	35387S-02005		
4000	69036323	A30487S-05005		
4500	69036324	A30487S-05006		
5000	69017072	30386S-01005		
5500	69016629	20388S-01007		
6000	69013007	30387S-01019		

图71/Fig71. 门架管路系统(二级全自由三联) MAST HYDRAULIC SYSTEM(FULL FREE 2-STAGE MAST THREE THROW)

FD20/25/30/35（T）、FG(L)20/25/30/35（T）

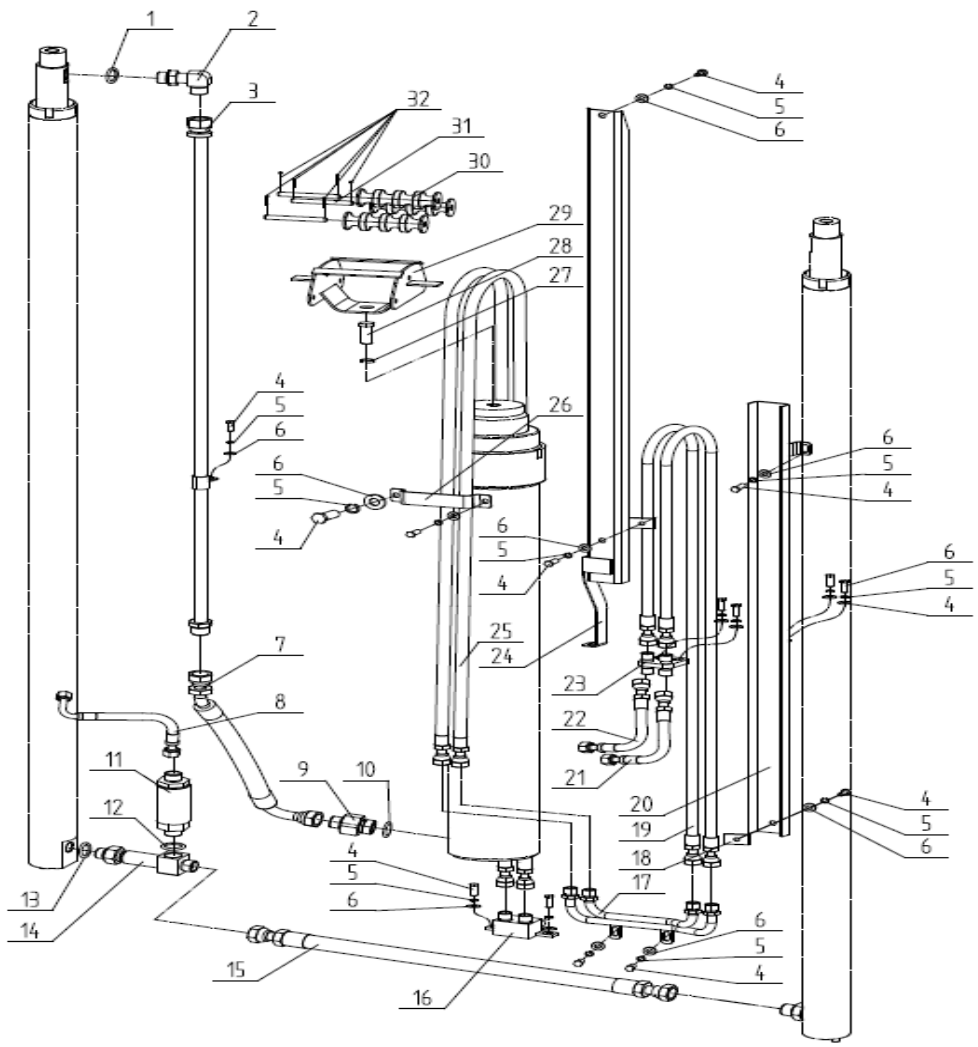

管路系统选用件-右导槽总成Ⅱ(件20)
Mast Piping Optional Parts

起升高度 LIFTING HEIGHT	ID.	A30487S-03000 Guider ass'y(right)Ⅱ		备注 REMARK
3000	69044880	A30487S-03000/1		标准 Standard
3300	69044881	A30487S-03000/2		
3500	69044882	A30487S-03000/3		
3700	69044883	A30487S-03000/4		
4000	69044884	A30487S-03000/5		
4500	69044885	A30487S-03000/6		
5000	69044886	A30487S-03000/7		
5500	69044878	A30487S-03000/8		
6000	69044888	A30487S-03000/9		

图71/Fig71. 门架管路系统(二级全自由三联) MAST HYDRAULIC SYSTEM(FULL FREE 2-STAGE MAST THREE THROW)

FD20/25/30/35（T）、FG(L)20/25/30/35（T）

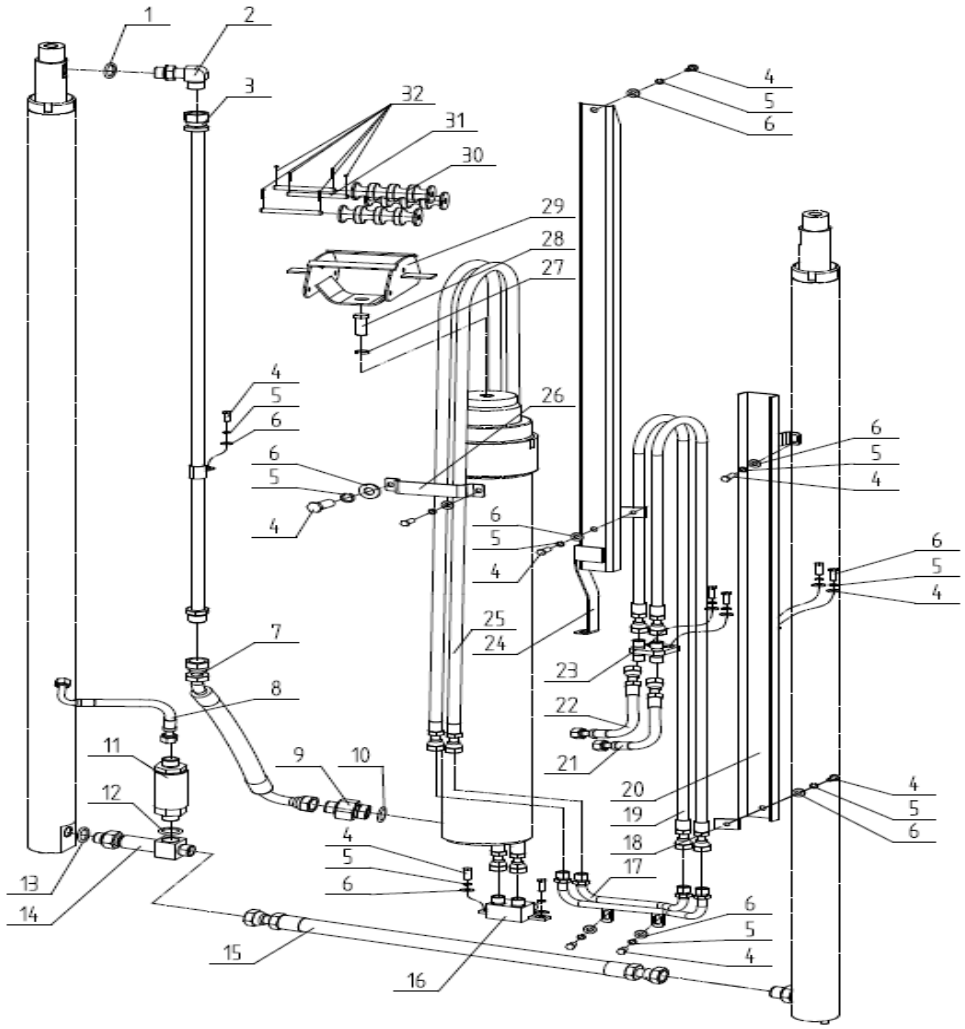

管路系统选用件-右导槽总成Ⅰ(件24)
Mast Piping Optional Parts

起升高度 LIFTING HEIGHT	2-2.5t		3.0t	3.5t	
	ID.	A20487S-01000 Guider ass'y(right) I	ID.	ID.	A35487S-01000 Guider ass'y(right) I
3000	69055756	A20487S-01000/1	69044871	7E+07	A35487S-01000/1
3300	69055757	A20487S-01000/2	69044872	7E+07	A35487S-01000/2
3500	69055758	A20487S-01000/3	69044873	7E+07	A35487S-01000/3
3700	69055759	A20487S-01000/4	69044874	7E+07	A35487S-01000/4
4000	69055760	A20487S-01000/5	69044875	7E+07	A35487S-01000/5
4500	69055761	A20487S-01000/6	69044876	7E+07	A35487S-01000/6
5000	69055762	A20487S-01000/7	69044877	7E+07	A35487S-01000/7
5500	69055763	A20487S-01000/8	69044878	7E+07	A35487S-01000/8
6000	69055764	A20487S-01000/9	69044879	7E+07	A35487S-01000/9

图71/Fig71. 门架管路系统(二级全自由三联) MAST HYDRAULIC SYSTEM(FULL FREE 2-STAGE MAST THREE THROW)

FD20/25/30/35（T）、FG(L)20/25/30/35（T）

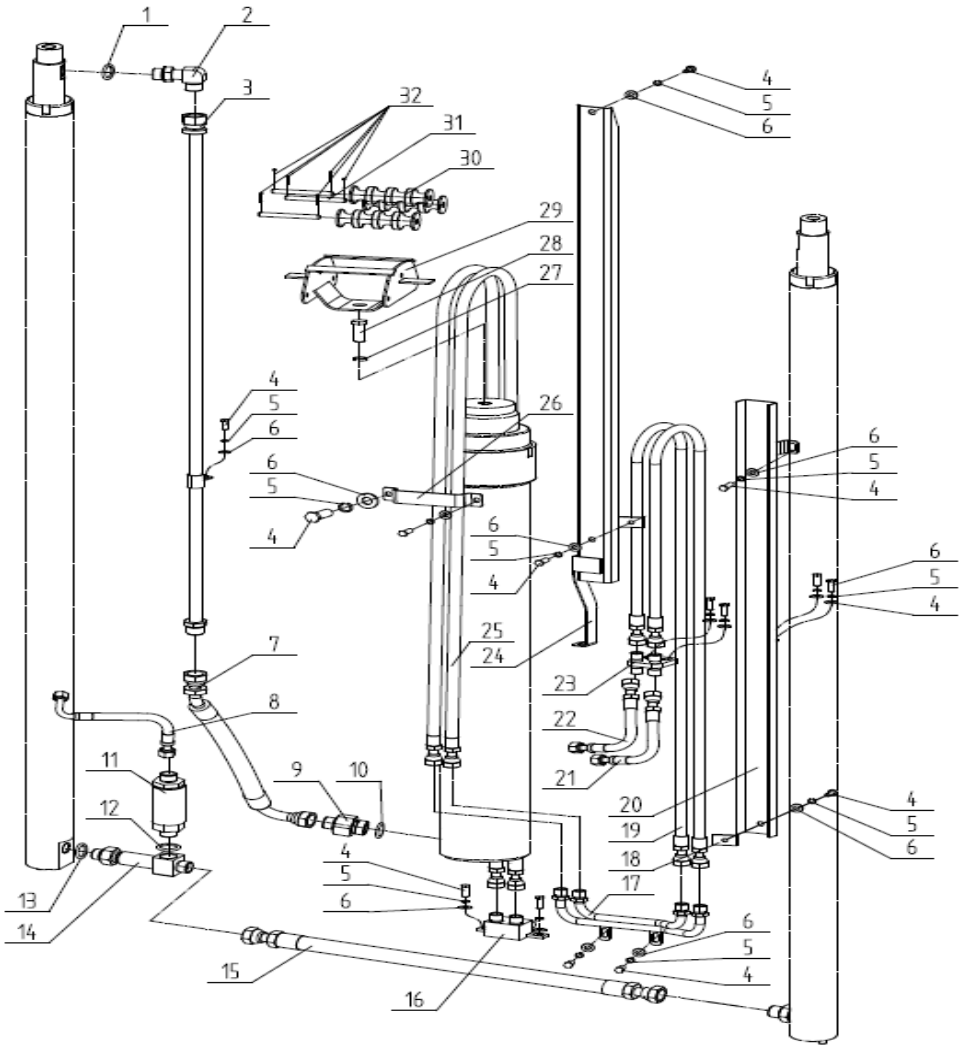

管路系统选用件-侧移胶管 I (件25)
Mast Piping Optional Parts

起升高度 LIFTING HEIGHT	2-2.5t		3.0t	3.5t	
	ID.	A20487S-02000 PLASTIC HOSE	ID.	ID.	A35487S-02000 PLASTIC HOSE
3000	69016819	30388SS-02005	69016819	7E+07	30388SS-02006
3300	69013015	30387S-02009	69043026	7E+07	30388S-02004
3500	69016786	30388S-02004	69017072	7E+07	30387S-02010
3700	69016643	20388SS-01009	69034196	7E+07	30387S-01018
4000	69016629	20388S-01007	69016776	7E+07	30388S-01004
4500	69016805	30388SS-01004	69016650	7E+07	20387S-01012
5000	69016651	30386S-01009	69016892	7E+07	20388S-01011
5500	69016780	30388S-01008	69016894	7E+07	35388S-01008
6000	69046328	A20488SS-02001	69016653	7E+07	30388S-01009

图72/Fig72. 门架管路系统(二级全自由四联) MAST HYDRAULIC SYSTEM(FULL FREE 2-STAGE MAST FOUR THROW)

FD20/25/30/35（T）、FG(L)20/25/30/35（T）

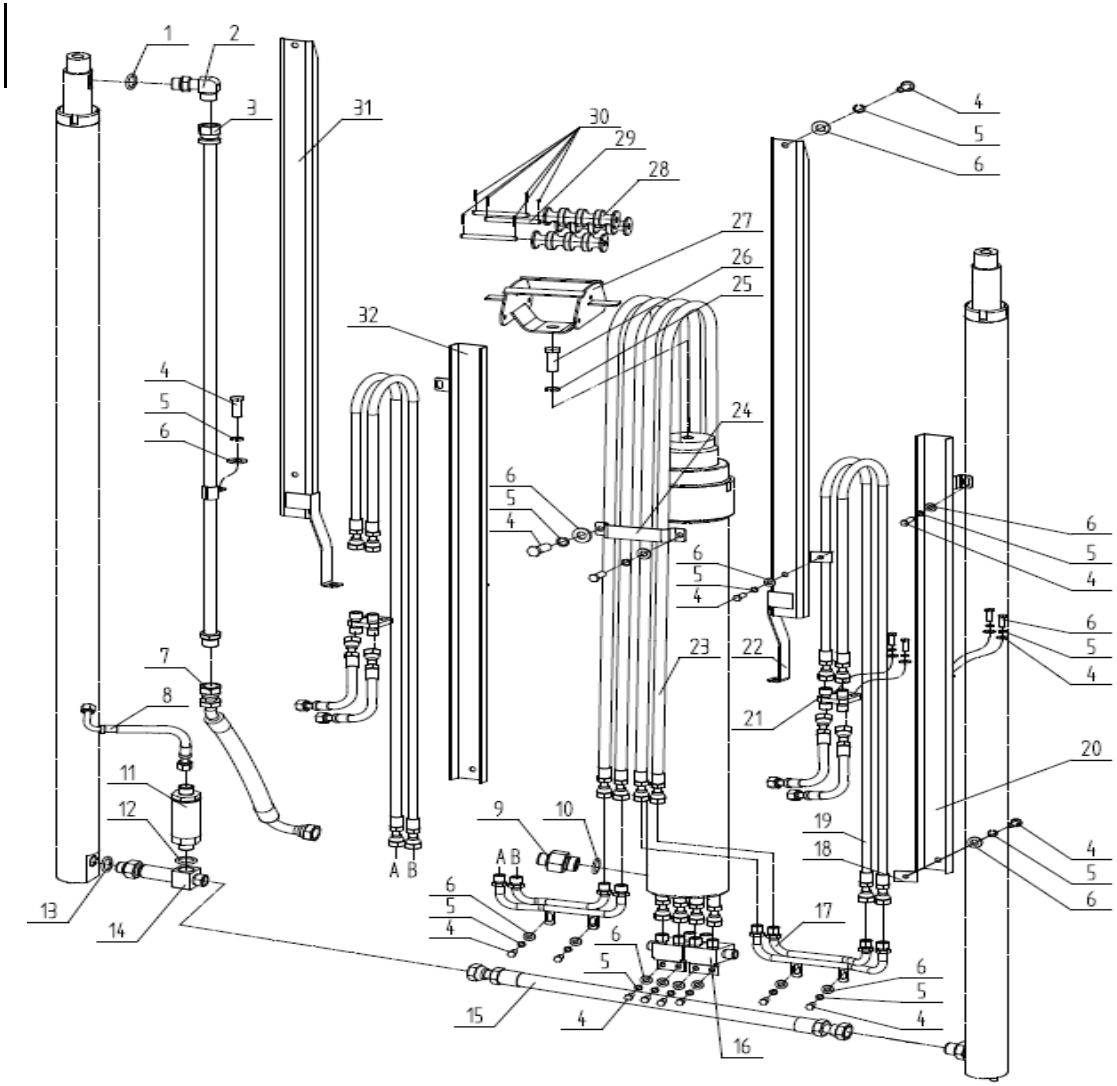

序号	物料ID	代号	名称	数量	备注
Item No.	ID.	Part No.	Description	Q' ty	Remark
A	N/A	-	Mast Hydraulic System	1	2-3.5t
1	69124144	GB/T3452.1-19*2.65-G	O-ring 19*2.65	1	
2	69003137	M3077601000	Pipe connector	1	
3	N/A	A20487-01000	Pipe ass'y	1	2-2.5t AS NEEDED
-	N/A	A30487-02000	Pipe ass'y	1	3t AS NEEDED
-	N/A	A35487-01000	Pipe ass'y	1	3.5t AS NEEDED
4	69000309	GB/T5783-M8*16-8.8J	Bolt M8*16	25	
5	69000259	GB/T97.1-8	Washer 8	25	
6	69000062	GB/T93-8	Washer 8	25	
7	69015804	15387-00001	H.P.hose between pipe and middle cylinder	1	
8	69011952	30386-00003	Multi-valve flow regulator H.P. hose Ⅱ	1	
9	69012037	30387-00003	Middle cylinder connector	1	
10	69124132	GB1235-30*3.5-G	O-ring 30*3.5	1	
11	69002920	20386-01000	Flow regulator	1	2-2.5t
-	69002922	30386-03000	Flow regulator	1	3t
-	69002923	35386-02000	Flow regulator	1	3.5t
12	69022457	GB/T1235-24*2.4	O-ring 24*2.4	1	
13	69124142	GB/T3452.1-17*2.65-G	O-ring17*2.65	1	
14	69016646	30386-01000	Lift cylinder tee connector	1	
15	69001331	30386-00001	H.P. hose between lift cylinders13Ⅱ-370	1	2-2.5t
-	69034147	A30486-00001	H.P. hose between lift cylinders13Ⅱ-380	1	3.0t
-	69126607	S30488-00002	H.P. hose between lift cylinders13Ⅱ-385	1	3.5t
16	69034198	A30488S-04000	Cross connector Ⅰ	1	
17	69056646	A30487SS-04000	Connecting pipe Ⅱ	1	
18	69056648	30387S-07001	Plate	4	

图72/Fig72. 门架管路系统(二级全自由四联) MAST HYDRAULIC SYSTEM(FULL FREE 2-STAGE MAST FOUR THROW)

FD20/25/30/35（T）、FG(L)20/25/30/35（T）

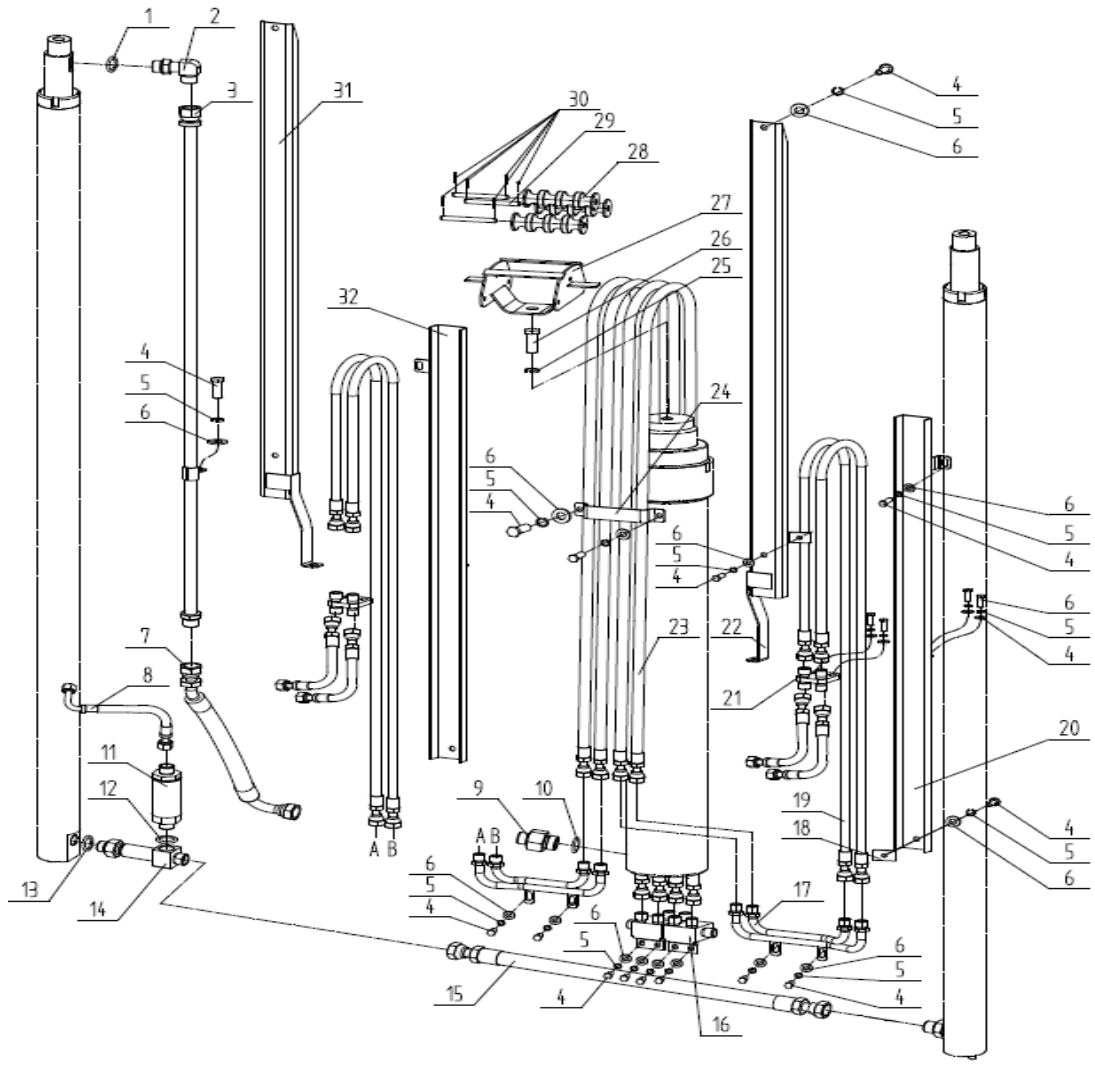

序号	物料ID	代号	名称	数量	备注
Item No.	ID.	Part No.	Description	Q' ty	Remark
19	N/A	A30487S-05000	Cross-H.P.hose	4	
20	N/A	A30487S-03000	Guider ass'y(right)Ⅱ	1	AS NEEDED
21	69034162	A30487S-01000	Cross connector	2	
22	N/A	A20487S-01000	Guider ass'y(right)Ⅰ	1	2-2.5t AS NEEDED
-	N/A	A30487S-02000	Guider ass'y(right)Ⅰ	1	3t AS NEEDED
-	N/A	A35487S-02000	Guider ass'y(right)Ⅰ	1	3.5t AS NEEDED
23	N/A	A20487S-02000	Side shift H.P.hose	2	2-2.5t AS NEEDED
-	N/A	A30487S-06000	Side shift H.P.hose	2	3t AS NEEDED
-	N/A	A35487S-02000	Side shift H.P.hose	2	3.5t AS NEEDED
24	69042096	A30488S-00002	Clip	1	
25	69000056	GB/T93-16	Washer 16	1	
26	69000176	GB/T5783-M16*80-8.8J	Bolt M16*80	1	
27	69115099	A30488S-01000A-Black	Roller bracket	1	
28	69123554	A30488S-00001B	Pulley	3	
29	69042097	GB/T880-Φ8*120	Shaft Φ8*120	3	
30	69005787	GB/T91-2*16	Cotter pin 2*16	6	
31	N/A	A20487SS-01000	Guider ass'y(left)Ⅰ	1	2-2.5t AS NEEDED
-	N/A	A30487SS-01000	Guider ass'y(left)Ⅰ	1	3t AS NEEDED
-	N/A	A35487SS-01000	Guider ass'y(left)Ⅰ	1	3.5t AS NEEDED
32	N/A	A20487SS-02000	Guider ass'y(left)Ⅱ	1	2-2.5t AS NEEDED
-	N/A	A30487SS-02000	Guider ass'y(left)Ⅱ	1	3-3.5t AS NEEDED
33	69056273	A20487SS-03000	Connecting pipe	1	2-2.5t
-	69034159	A30487SS-03000	Connecting pipe	1	3-3.5t
34	69034214	A30488SS-04000	Cross connector Ⅰ	1	
35	69034160	A30487S-00001	Multi-valve -Cross H.P.hose Ⅰ	2	
36	69034161	A30487S-00002	Multi-valve -Cross H.P.hose Ⅱ	2	
37	69034157	A30487SS-00001	Multi-valve -Cross H.P.hose Ⅰ	2	
38	69034158	A30487SS-00002	Multi-valve -Cross H.P.hose Ⅱ	2	

图72/Fig72. 门架管路系统(二级全自由四联) MAST HYDRAULIC SYSTEM(FULL FREE 2-STAGE MAST FOUR THROW)

FD20/25/30/35（T）、FG(L)20/25/30/35（T）

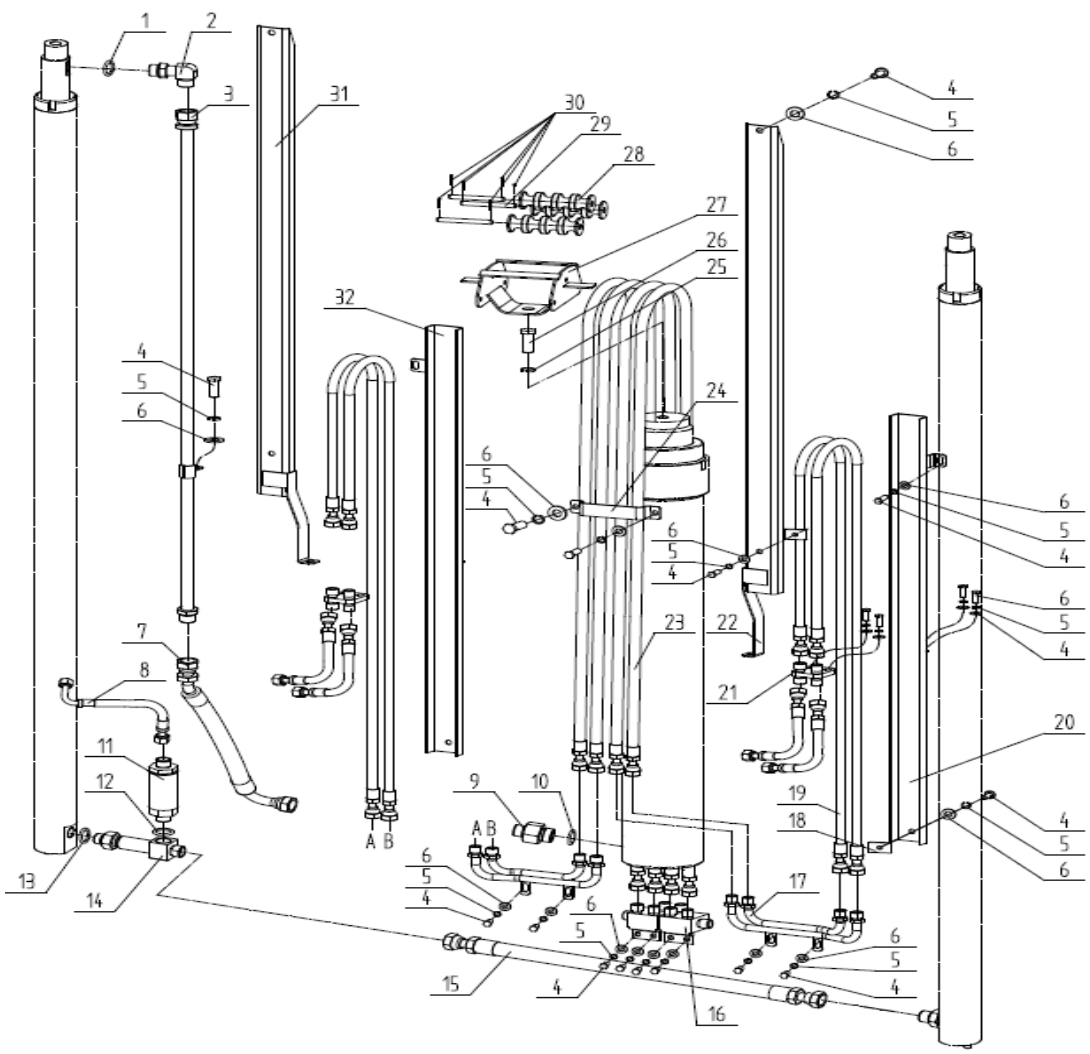

管路系统选用件-左导槽总成Ⅱ(件32)
Mast Piping Optional Parts

起升高度 LIFTING HEIGHT	2.5t		3.0-3.8t	备注 REMARK
	ID.	A20487SS-02000 Guider ass'y(left)Ⅱ	ID.	
3000	69056274	A20487SS-02000/1	69044916	标准
3300	69056275	A20487SS-02000/2	69044917	
3500	69056276	A20487SS-02000/3	69044918	
3700	69056277	A20487SS-02000/4	69044919	
4000	69056278	A20487SS-02000/5	69044920	
4500	69056279	A20487SS-02000/6	69044921	
5000	69056280	A20487SS-02000/7	69044922	
5500	69056281	A20487SS-02000/8	69044923	
6000	69056282	A20487SS-02000/9	69044924	

图73/Fig73. 门架管路系统(三级全自由二联) MAST HYDRAULIC SYSTEM(FULL FREE 3-STAGE MAST TWO THROW)

FD20/25/30/35（T）、FG(L)20/25/30/35（T)

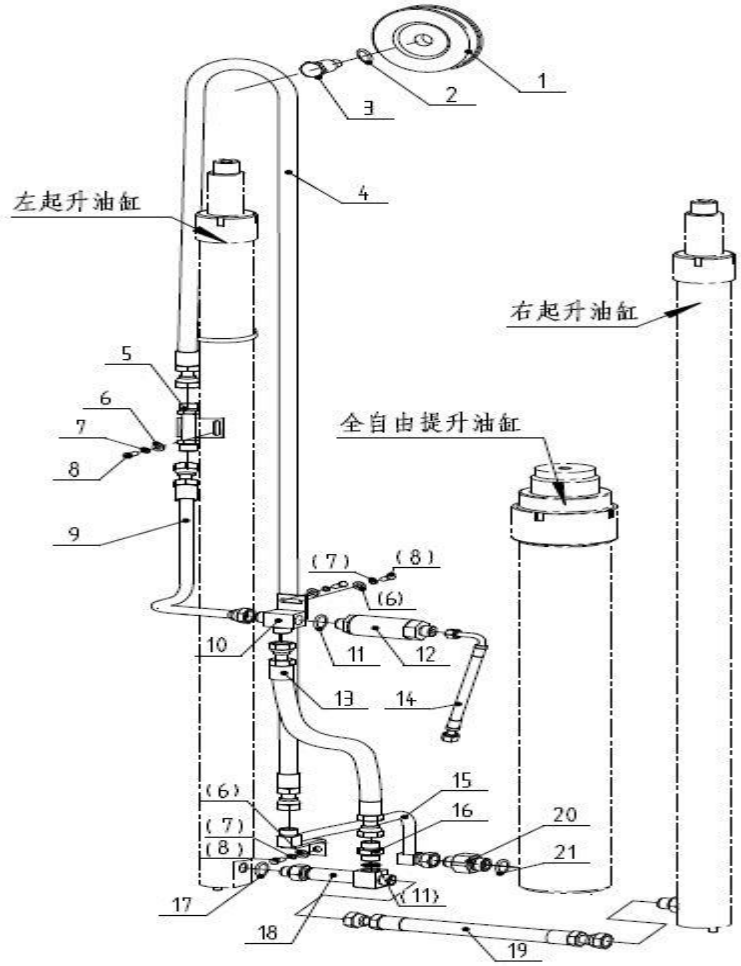

序号	物料ID	代号	名称	数量	备注
Item No.	ID.	Part No.	Description	Q' ty	Remark
A	N/A	-	Mast Hydraulic System	1	2-3.5t
1	69004304	30388-00002	3 stage single pulley	1	
2	69000579	30386S-00004(8)	Spacer	2	
3	69016768	30388-00004	Step bolt	1	
4	N/A	S20488-01000	Full free middle cylinder H.P.hose	1	2-2.5t AS NEEDED
-	N/A	S30488-01000	Full free middle cylinder H.P.hose	1	3t AS NEEDED
-	N/A	S35488-01000	Full free middle cylinder H.P.hose	1	3.5t AS NEEDED
5	69069533	S30488-02000	Connecting pipe	1	
6	69000259	GB/T97.1-8	Washer 8	4	
7	69000062	GB/T93-8	Washer 8	4	
8	69000309	GB/T5783-M8*16-8.8J	Bolt M8*16	4	
9	69069532	S30488-00001	Connecting H.P.hose	1	
10	69016770	30388-02000	Flow regulator tee connector	1	
11	69022457	GB/T1235-24*2.4	O-ring 24*2.4	2	
12	69002920	20386-01000	Flow regulator	1	2-2.5t
-	69002922	30386-03000	Flow regulator	1	3t
-	69002923	35386-02000	Flow regulator	1	3.5t
13	69016886	35388-00001	H.P.hose between tee connnectors	1	
14	69011952	30386-00003	Multi-valve flow regulator H.P. hose Ⅱ	1	
15	69034190	A30488-02000	Middle cylinder inlet pipe	1	2-3t
-	69042971	A35488-02000	Middle cylinder inlet pipe	1	3.5t
16	69011952	30386-00003	Multi-valve flow regulator H.P. hose Ⅱ	1	
17	69124142	GB/T3452.1-17*2.65-G	O-ring 17*2.65	1	
18	69016646	30386-01000	Lift cylinder tee connector	1	
19	69001331	30386-00001	H.P. hose between lift cylinders 13Ⅱ-370	1	2-2.5t

图73/Fig73. 门架管路系统(三级全自由二联) MAST HYDRAULIC SYSTEM(FULL FREE 3-STAGE MAST TWO THROW)

FD20/25/30/35（T）、FG(L)20/25/30/35（T)

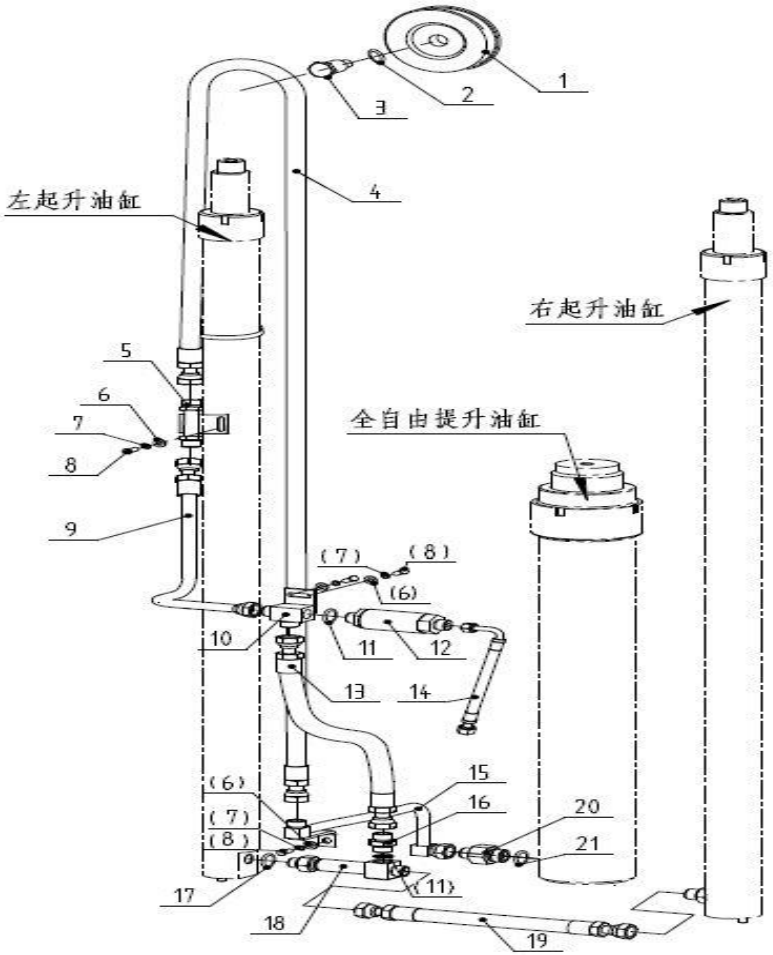

序号	物料ID	代号	名称	数量	备注
Item No.	ID.	Part No.	Description	Q' ty	Remark
-	69126607	S30488-00002	H.P. hose between lift cylinders 13H-390	1	3-3.5t
20	69006260	30388-00005	Lift cylinder connector	1	
21	69018910	GB/T1235-30*3.1	O-ring 30*3.1	1	

图73/Fig73. 门架管路系统(三级全自由二联) MAST HYDRAULIC SYSTEM(FULL FREE 3-STAGE MAST TWO THROW)

FD20/25/30/35（T）、FG(L)20/25/30/35（T）

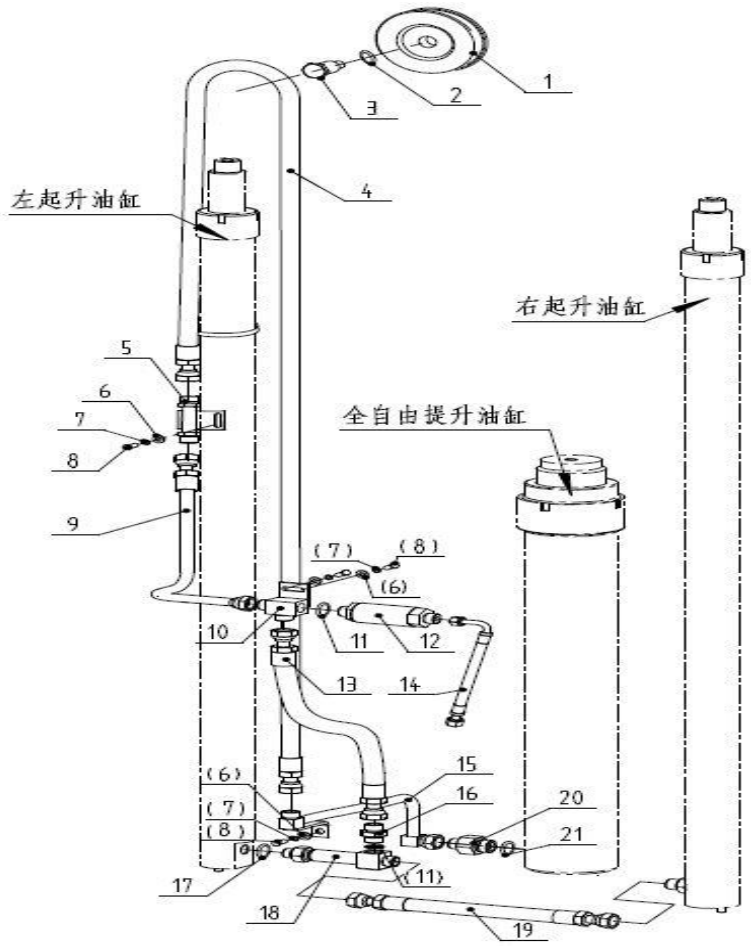

管路系统选用件-全自由缸进油胶管(件4)
Mast Piping Optional Parts

起升高度 LIFTING HEIGHT	2-2.5t		3.0t	3.8t	
	ID.	S20488-01000 PLASTIC HOSE	ID.	ID.	S35488-01000 PLASTIC HOSE
3600	69070967	S20488-01001	69069535	7E+07	S35488-01001-2065
4000	69042812	A20488-01001	69012316	7E+07	A35488-01001-2310
4350	69042839	A20488-01002	69012317	7E+07	A35488-01002-2560
4500	69012317	16888-01002	69016877	7E+07	16888-01003-2670
4800	69016754	30388-01003	69016755	7E+07	35388-01004-2855
5000	69042965	A35488-01003	69016756	7E+07	35388-01005-3055
5400	69042845	A20488-01006	69012320	7E+07	A35488-01004-3300
5500	69016882	35388-01007	69012942	7E+07	30388-01007-3360
6000	69016883	35388-01008	69069536	7E+07	40388X-01008-3745

图74/Fig74. 门架管路系统(三级全自由三联) MAST HYDRAULIC SYSTEM(FULL FREE 3-STAGE MAST THREE THROW)

FD20/25/30/35（T）、FG(L)20/25/30/35（T）

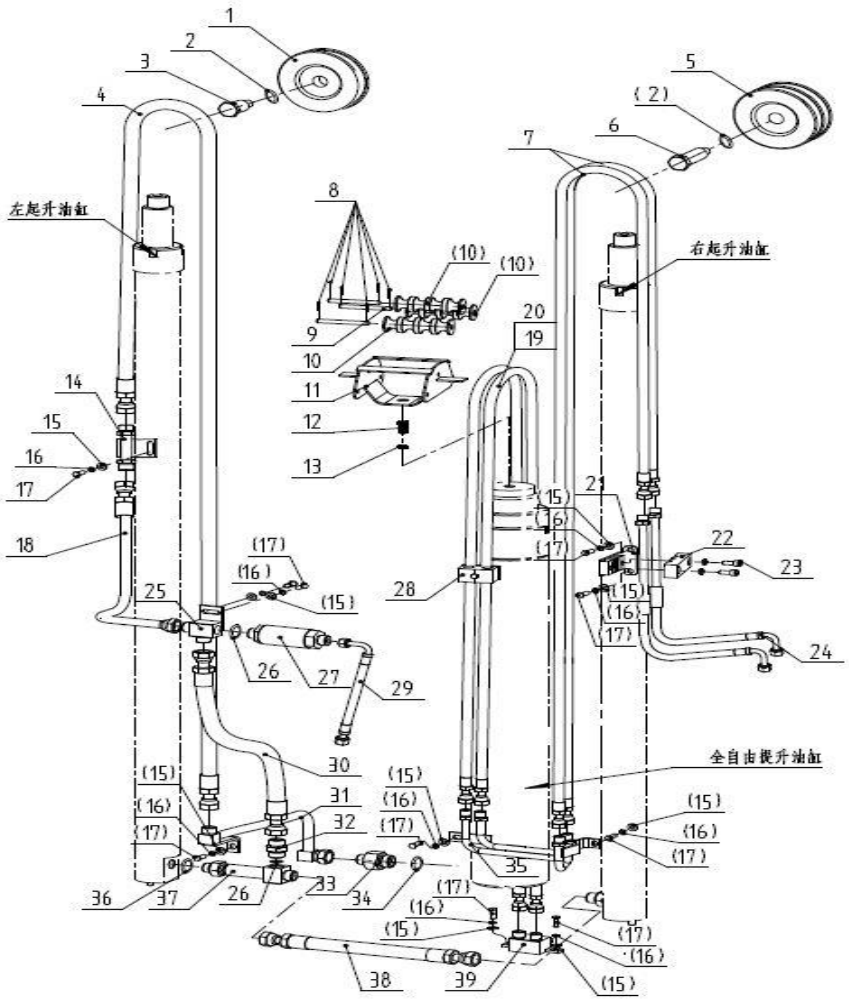

序号	物料ID	代号	名称	数量	备注
Item No.	ID.	Part No.	Description	Q' ty	Remark
A	N/A	-	Mast Hydraulic System	1	2-3.5t
1	69004304	30388-00002	3 stage single pulley	1	
2	69000579	30386S-00004(8)	Spacer	3	
3	69016768	30388-00004	Step bolt	1	
4	N/A	S20488-01000	Full free middle cylinder H.P.hose	1	2-2.5t AS NEEDED
-	N/A	S30488-01000	Full free middle cylinder H.P.hose	1	3t AS NEEDED
-	N/A	S35488-01000	Full free middle cylinder H.P.hose	1	3.5t AS NEEDED
5	69012028	30388S-00004	3 stage double pulley	1	
6	69016660	30386S-00003	Step bolt	4	
7	N/A	S20488S-01000	Side shift H.P.hose Ⅰ	2	2-2.5t AS NEEDED
-	N/A	S30488S-01000	Side shift H.P.hose Ⅰ	2	3t AS NEEDED
-	N/A	S35488S-01000	Side shift H.P.hose Ⅰ	2	3.5t AS NEEDED
8	69005787	GB/T91-2*16	Cotter pin 2*16	6	
9	69042097	GB/T880-Φ8*120	Shaft Φ8*120	3	
10	69123554	A30488S-00001B	Pulley	3	
11	69115099	A30488S-01000A-Black	Roller bracket	1	
12	69000176	GB/T5783-M16*80-8.8J	Bolt M16*80	1	
13	69000056	GB/T93-16	Washer 16	1	
14	69069533	S30488-02000	Connecting pipe	1	
15	69000259	GB/T97.1-8	Washer 8	12	
16	69000062	GB/T93-8	Washer 8	12	
17	69000309	GB/T5783-M8*16-8.8J	Bolt M8*16	12	
18	69069532	S30488-00001	Connecting H.P.hose	1	
19	N/A	A20488S-02000	Pulley H.P.hose Ⅱ	2	2-2.5t AS NEEDED
-	N/A	A30488S-02000	Side shift H.P.hose	2	3t AS NEEDED

图74/Fig74. 门架管路系统(三级全自由三联) MAST HYDRAULIC SYSTEM(FULL FREE 3-STAGE MAST THREE THROW)

FD20/25/30/35（T）、FG(L)20/25/30/35（T）

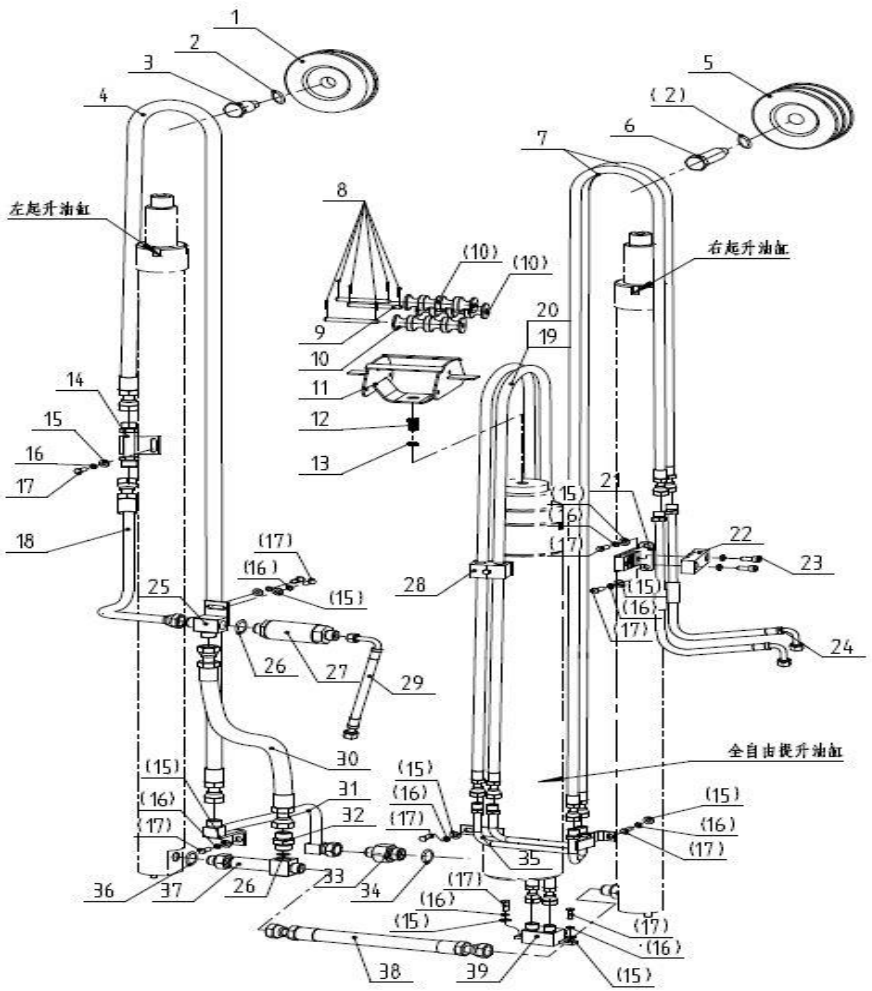

序号	物料ID	代号	名称	数量	备注
Item No.	ID.	Part No.	Description	Q' ty	Remark
-	N/A	A35488S-03000	Side shift H.P.hoseIII	2	3.5t AS NEEDED
20	N/A	A20488S-03000	Side shift H.P.hoseIII	2	2-2.5t(内置侧移用) AS NEEDED
-	N/A	A30488S-02000	Side shift H.P.hose	2	3t(内置侧移用) AS NEEDED
-	N/A	A35488S-02000	Side shift H.P.hoseII	2	3.5t(内置侧移用) AS NEEDED
21	69069601	S30488S-02000	Pipe clamp plate	1	
22	69069599	S30488S-00001	Pipe clamp	1	
23	69000243	GB/T70.1-M8*20-8.8J	Screw M8*20	2	
24	69069600	S30488S-00002	Multi-valve adjusting pipe H.P.hose	2	
25	69016770	30388-02000	Flow regulator tee connector	1	
26	69022457	GB/T1235-24*2.4	O-ring 24*2.4	2	
27	69002920	20386-01000	Flow regulator	1	2-2.5t
-	69002922	30386-03000	Flow regulator	1	3t
-	69002923	35386-02000	Flow regulator	1	3.5t
28	69069602	S30488S-00003	Pipe clamp	1	
29	69011952	30386-00003	Multi-valve flow regulator H.P. hose II	1	
30	69016886	35388-00001	H.P.hose between tee connectors	1	
31	69034190	A30488-02000	Middle cylinder inlet pipe	1	2-3t
-	69042971	A35488-02000	Middle cylinder inlet pipe	1	3.5t
32	69016767	30388-00003	Connector	1	
33	69006260	30388-00005	Lift cylinder connector	1	
34	69018910	GB/T1235-30*3.1	O-ring 30*3.1	1	
35	69034197	A30488S-03000	Side shift connecting pipe	1	
36	69124142	GB/T3452.1-17*2.65-G	O-ring 17*2.65	1	
37	69016646	30386-01000	Lift cylinder tee connector	1	
38	69001331	30386-00001	H.P. hose between lift cylinders 13II-370	1	2-2.5t

图74/Fig74. 门架管路系统(三级全自由三联) MAST HYDRAULIC SYSTEM(FULL FREE 3-STAGE MAST THREE THROW)

FD20/25/30/35（T）、FG(L)20/25/30/35（T）

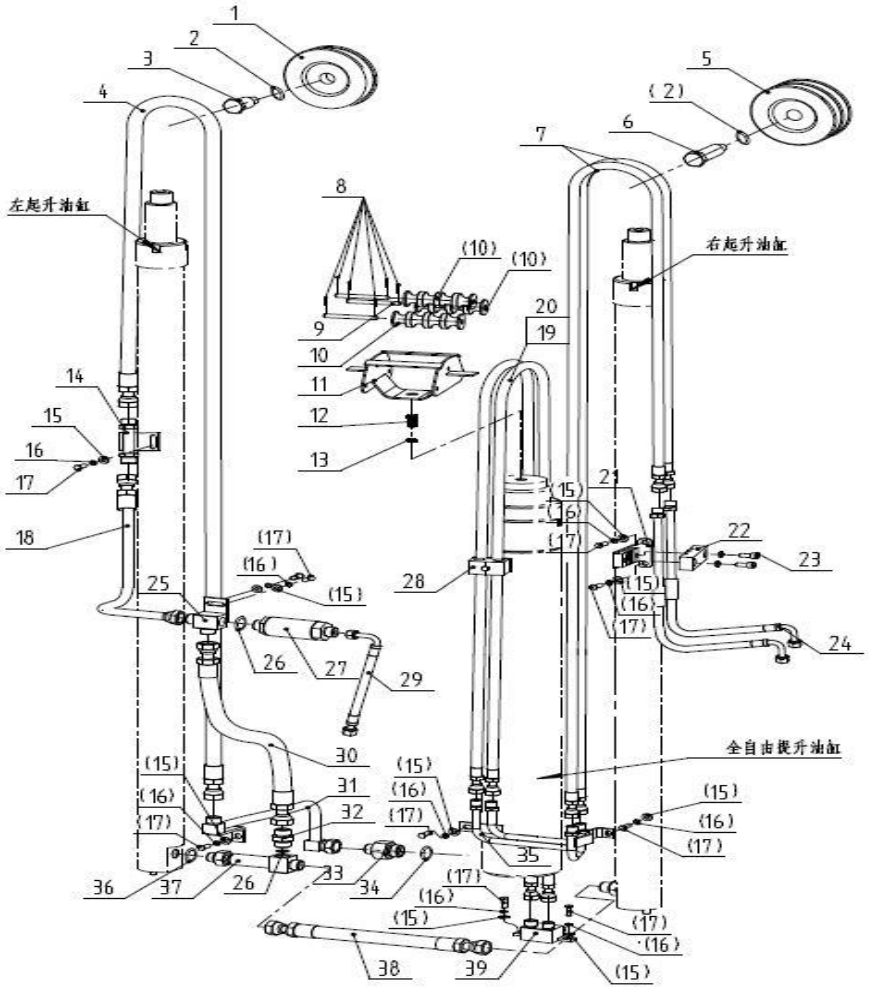

序号	物料ID	代号	名称	数量	备注
Item No.	ID.	Part No.	Description	Q' ty	Remark
-	69126607	S30488-00002	H.P. hose between lift cylinders 13H-385	1	3-3.5t
39	69012712	30387S-08000	Cross connector Ⅱ	1	

图74/Fig74. 门架管路系统(三级全自由三联) MAST HYDRAULIC SYSTEM(FULL FREE 3-STAGE MAST THREE THROW)

FD20/25/30/35（T）、FG(L)20/25/30/35（T）

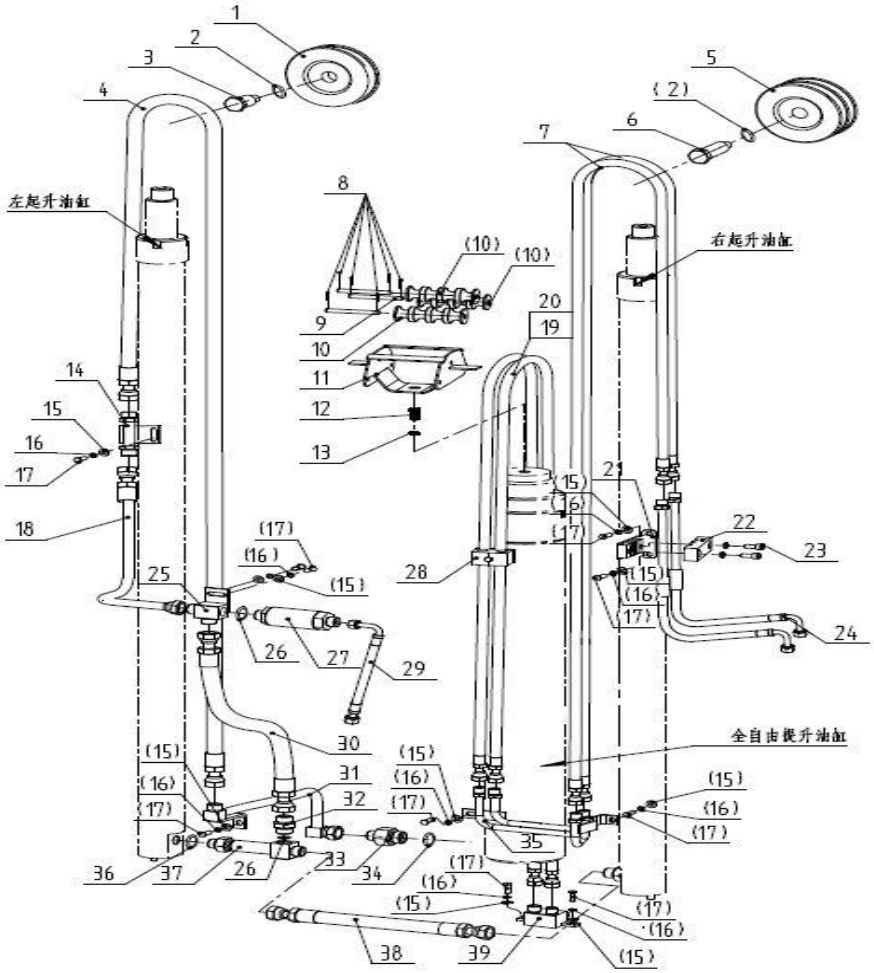

管路系统选用件-侧移胶管I(件7)
Mast Piping Optional Parts

起升高度 LIFTING HEIGHT	2-2.5t		3.0t	3.5t	
	ID.	S20488S-01000 PLASTIC HOSE	ID.	ID.	S35488S-01000 PLASTIC HOSE
3600	69012998	30387S-01010	69016817	7E+07	30387S-01014
4000	69013002	30387S-01014	69016820	7E+07	30388S-02004
4350	69016785	30388S-02003	69016643	7E+07	30387S-01018
4500	69017072	30386S-01005	69016789	7E+07	30388S-02008
4800	69016629	20388S-01007	69016776	7E+07	30387S-01019
5000	69013017	30387S-02011	69016650	7E+07	30387S-02012
5400	69013018	30387S-02012	69016892	7E+07	30386S-01010
5500	69016778	30388S-01006	69018307	7E+07	30386S-01011
6000	69016780	30388S-01008	69016809	7E+07	30386S-01013

图74/Fig74. 门架管路系统(三级全自由三联) MAST HYDRAULIC SYSTEM(FULL FREE 3-STAGE MAST THREE THROW)

FD20/25/30/35（T）、FG(L)20/25/30/35（T）

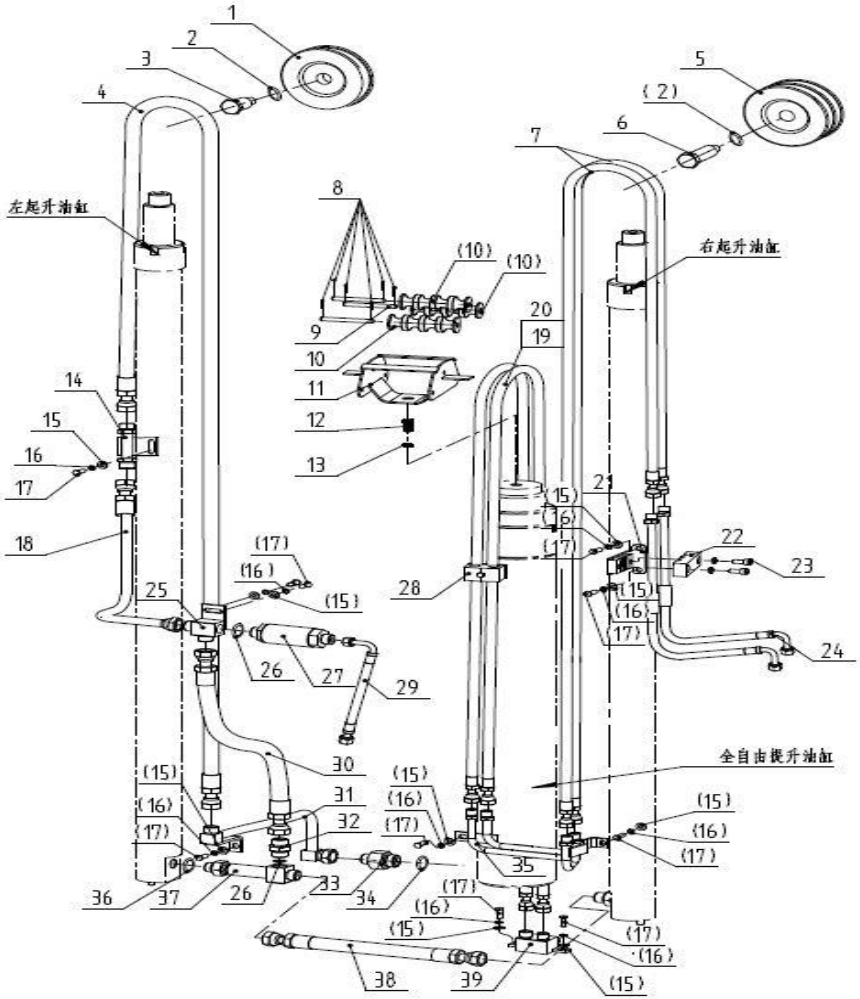

管路系统选用件-侧移胶管(件19)
Mast Piping Optional Parts

起升高度 LIFTING HEIGHT	2-2.5t		3.0t	3.5t	
	ID.	A20488S-02000 PLASTIC HOSE	ID.	ID.	A35488S-03000 PLASTIC HOSE
3600	69012998	30387S-01010	69012999	7E+07	30387S-01012
4000	69017069	30386S-01002	69013014	7E+07	30387S-02008
4350	69013002	30387S-01014	69016819	7E+07	20B88S-01001
4500	69016819	30388SS-02005	69016772	7E+07	30386S-01003
4800	69016820	30388SS-02006	69013015	7E+07	30387S-02009
5000	69043026	A20488S-02001	69016786	7E+07	30386S-01004
5400	69016643	20388SS-01009	69016643	7E+07	30387S-02010
5500	69013016	30387S-02010	69034196	7E+07	30388S-02006
6000	69067309	35BJ88S-01001	69016889	7E+07	30388S-01004
6500	69013007	30387S-01019	69016776	7E+07	30388SS-01004

图74/Fig74. 门架管路系统(三级全自由三联) MAST HYDRAULIC SYSTEM(FULL FREE 3-STAGE MAST THREE THROW)

FD20/25/30/35（T）、FG(L)20/25/30/35（T）

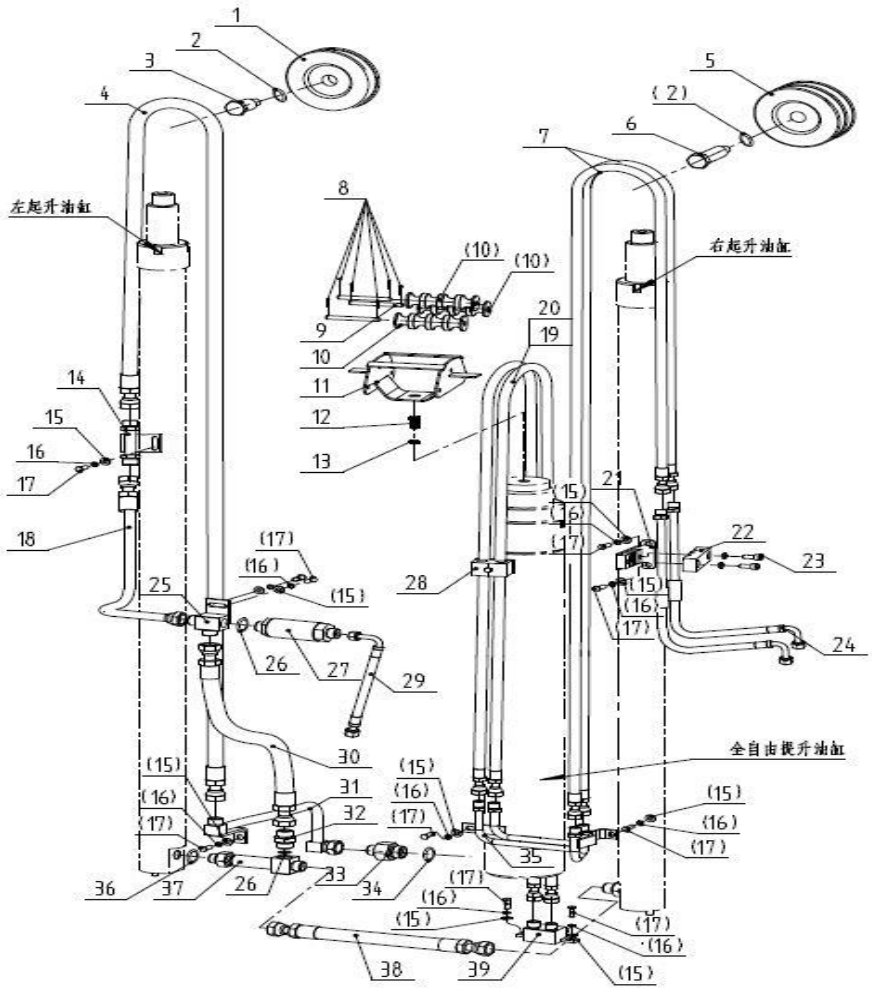

管路系统选用件-侧移胶管(件20)
Mast Piping Optional Parts

起升高度 LIFTING HEIGHT	2-2.5t		3.0t	3.5-x4t	
	ID.	A20488S-03000 PLASTIC HOSE	ID.	ID.	A35488S-02000 PLASTIC HOSE
3600	69012997	30387S-01009	69012999	7E+07	30387S-01011
4000	69013001	30387S-01013	69013014	7E+07	30387S-02008
4350	69016639	20388SS-01005	69016819	7E+07	30388SS-02005
4500	69013002	30387S-01014	69016772	7E+07	30388S-01001
4800	69017070	30386S-01003	69013015	7E+07	30387S-02009
5000	69013015	30387S-02009	69016786	7E+07	30388S-02004
5400	69017072	30386S-01005	69016643	7E+07	20388SS-01009
5500	69016643	20388SS-01009	69034196	7E+07	A30488S-02004
6000	69016629	20388S-01007	69016889	7E+07	30388S-02008
6500	69016631	20388S-01009	69016776	7E+07	30388S-01004

图75/Fig75. 门架管路系统(三级全自由四联) MAST HYDRAULIC SYSTEM(FULL FREE 3-STAGE MAST FOUR THROW)

FD20/25/30/35（T）、FG(L)20/25/30/35（T)

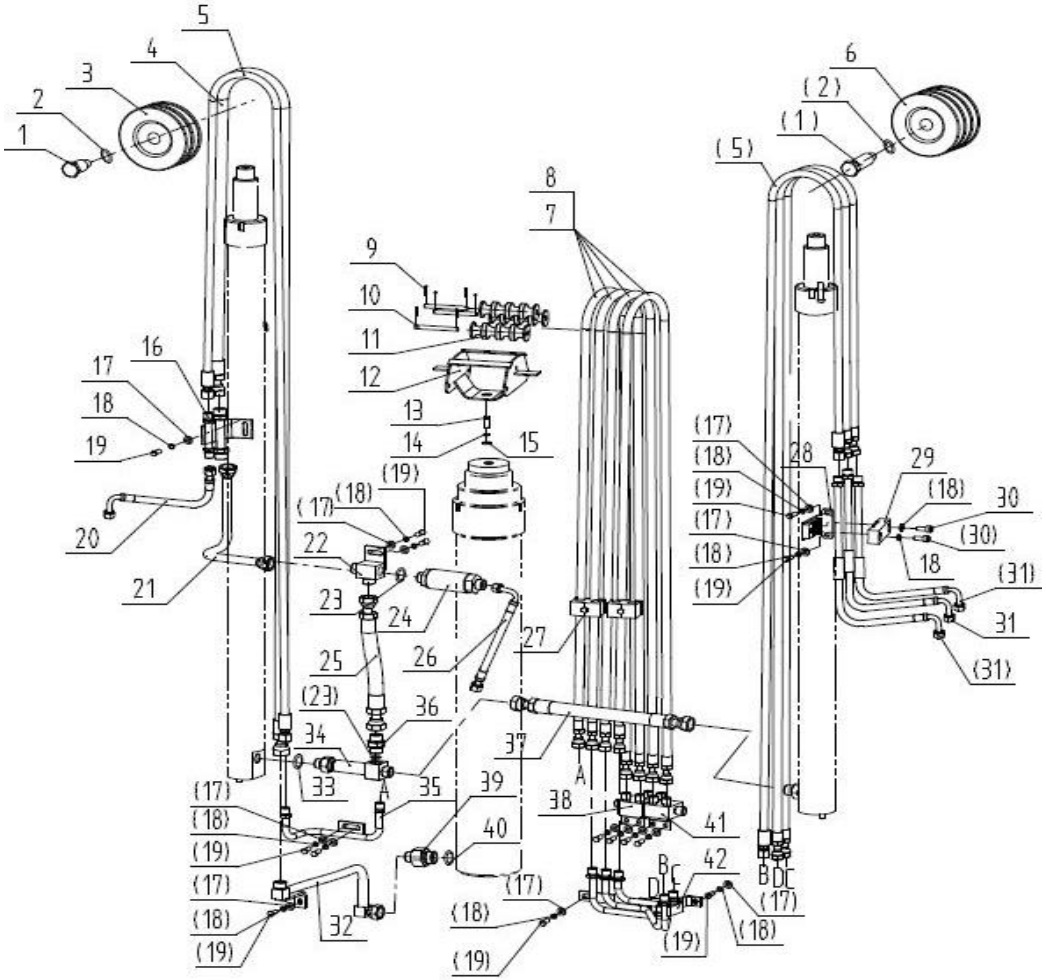

序号	物料ID	代号	名称	数量	备注
Item No.	ID.	Part No.	Description	Q' ty	Remark
A	N/A	-	Mast Hydraulic System	1	2-3.5t
1	69016660	30386S-00003	Step bolt	2	
2	69000579	30386S-00004(8)	Spacer	4	
3	69024658	30488W2-00002	Pulley Ⅰ	1	
4	N/A	S20488-01000	Full free middle cylinder H.P.hose	1	2-2.5t AS NEEDED
-	N/A	S30488-01000	Full free middle cylinder H.P.hose	1	3t AS NEEDED
-	N/A	S35488-01000	Full free middle cylinder H.P.hose	1	3.5t AS NEEDED
5	N/A	S20488S-01000	Side shift H.P.hose Ⅰ	4	2-2.5t AS NEEDED
-	N/A	S30488S-01000	Side shift H.P.hose Ⅰ	4	3t AS NEEDED
-	N/A	S35488S-01000	Side shift H.P.hose Ⅰ	4	3.5t AS NEEDED
6	69034208	A30488SS-00001	3 stage Pulley Ⅱ	4	
7	N/A	A20488S-02000	Side shift H.P.hose Ⅱ	4	2-2.5t AS NEEDED
-	N/A	A30488S-02000	Side shift H.P.hose	4	3t AS NEEDED
-	N/A	A35488S-03000	Side shift H.P.hoseⅢ	4	3.5t AS NEEDED
8	N/A	A20488S-03000	Side shift H.P.hoseⅢ	4	2-2.5t(内置侧移用) AS NEEDED
-	N/A	A30488S-02000	Side shift H.P.hose	4	3t(内置侧移用) AS NEEDED
-	N/A	A35488S-02000	Side shift H.P.hose Ⅱ	4	3.5t(内置侧移用) AS NEEDED
9	69005787	GB/T91-2*16	Cotter pin 2*16	6	
10	69042097	GB/T880-Φ8*120	Shaft φ8*120	3	
11	69123554	A30488S-00001B	Pulley	3	
12	69115099	A30488S-01000A-Black	Roller bracket	1	
13	69000176	GB/T5783-M16*80-8.8J	Bolt M16*70	1	
14	69000056	GB/T93-16	Washer 16	1	
15	69000253	GB/T97.1-16	Washer 16	1	
16	69069847	S30488SS-01000	Connecting pipe	1	

图75/Fig75. 门架管路系统(三级全自由四联) MAST HYDRAULIC SYSTEM(FULL FREE 3-STAGE MAST FOUR THROW)

FD20/25/30/35（T）、FG(L)20/25/30/35（T)

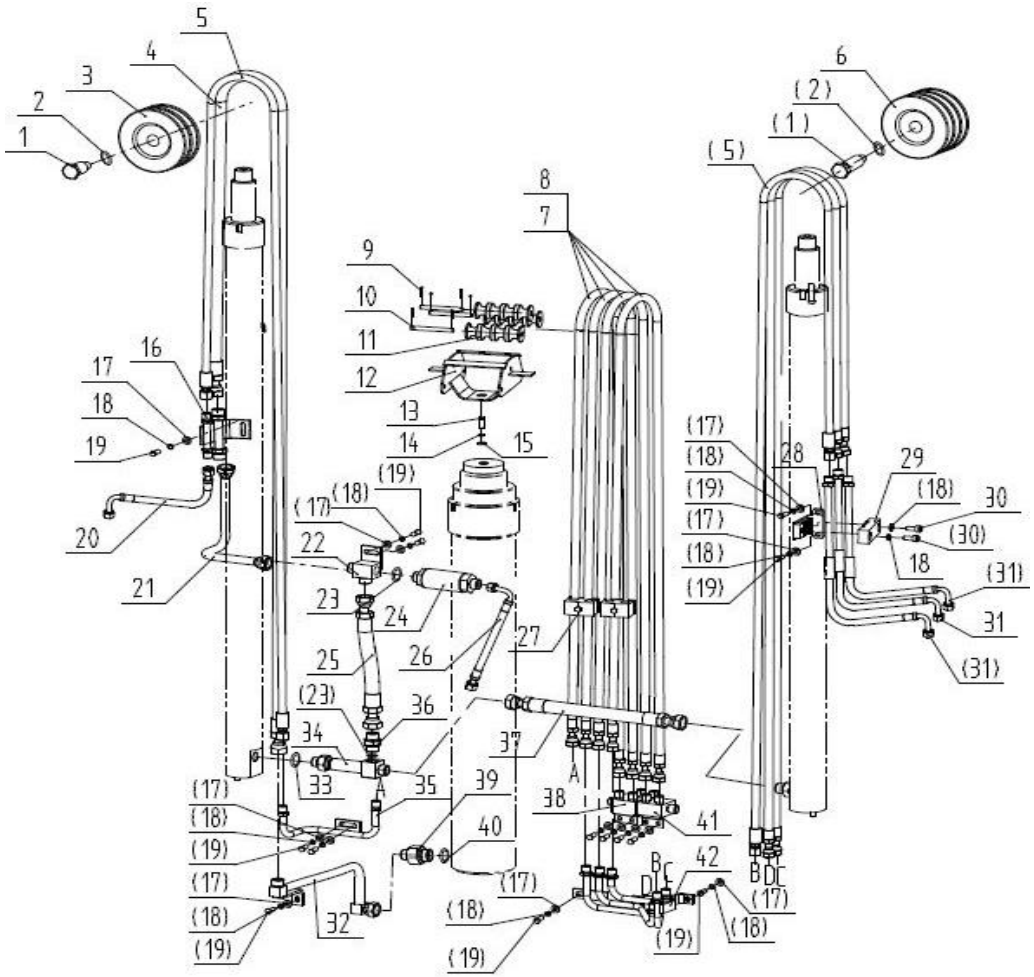

序号	物料ID	代号	名称	数量	备注
Item No.	ID.	Part No.	Description	Q' ty	Remark
17	69000259	GB/T97.1-8	Washer 8	14	
18	69000062	GB/T93-8	Washer 8	16	
19	69000309	GB/T5783-M8*16-8.8J	Bolt M8*16	14	
20	69001396	MS1677600002	Steering cylinder H.P. hose Ⅰ	1	
21	69069532	S30488-00001	Connecting H.P Hose	1	
22	69016770	30388-02000	Flow regulator Tee connector	1	
23	69022457	GB/T1235-24*2.4	O-ring 24*2.4	2	
24	69002920	20386-01000	Flow regulator	1	2-2.5t
-	69002922	30386-03000	Flow regulator	1	3t
-	69002923	35386-02000	Flow regulator	1	3.5t
25	69016886	35388-00001	H.P.hose between tee connectors	1	
26	69011952	30386-00003	Multi-valve flow regulator H.P. hose Ⅱ	1	
27	69069602	S30488S-00003	Pipe clamp	2	
28	69069601	S30488S-02000	Pipe clamp plate	1	
29	69069599	S30488S-00001	Pipe clamp	1	
30	69000243	GB/T70.1-M8*20-8.8J	Screw M8*20	2	
31	69069600	S30488S-00002	Multi-valve adjusting pipe H.P.hose	3	
32	69034190	A30488-02000	Middle cylinder inlet pipe	1	2-3t
-	69042971	A35488-02000	Middle cylinder inlet pipe	1	3.5t
33	69124142	GB/T3452.1-17*2.65-G	O-ring 17*2.65	1	
34	69016646	30386-01000	Lift cylinder tee connector	1	
35	69129638	S20488SS-01000	Cross Connecting seat Ⅰ	1	2-2.5t
-	69129636	A30488SS-03000A	Cross Connecting seat Ⅰ	1	3-3.5t
36	69016767	30388-00003	Connector	1	
37	69001331	30386-00001	H.P.hose between lift cylinders 13Ⅱ-370	1	2-2.5t

图75/Fig75. 门架管路系统(三级全自由四联) MAST HYDRAULIC SYSTEM(FULL FREE 3-STAGE MAST FOUR THROW)

FD20/25/30/35（T）、FG(L)20/25/30/35（T）

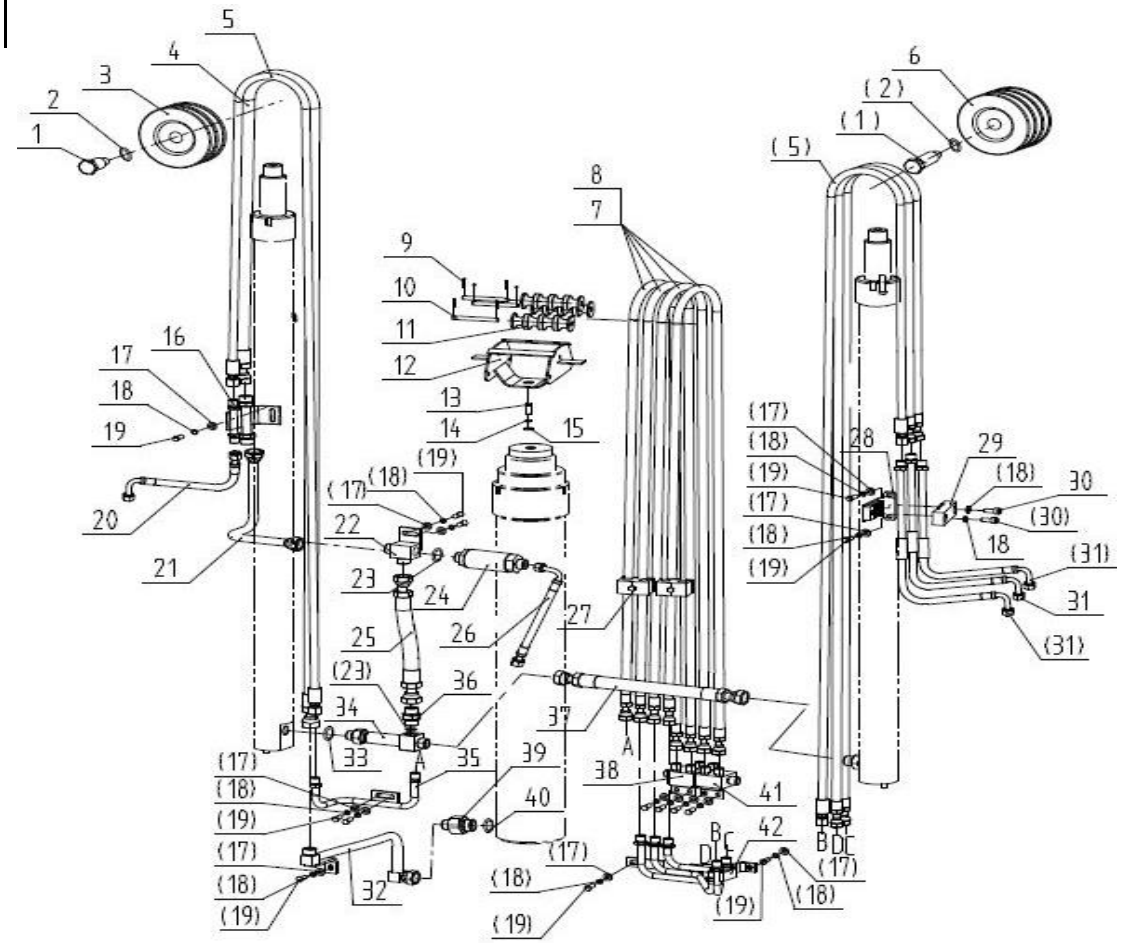

序号	物料ID	代号	名称	数量	备注
Item No.	ID.	Part No.	Description	Q' ty	Remark
-	69126607	S30488-00002	H.P. hose between lift cylinders 13Ⅱ-385	1	3-3.5t
38	69034214	A30488SS-04000	Cross connectorⅡ	1	
39	69006260	30388-00005	Lift cylinder connector	1	
40	69018910	GB/T1235-30*3.1	O-ring 30*3.1	1	
41	69034198	A30488S-04000	Cross connectorⅠ	1	
42	69129637	A30488SS-05000A	Cross Connecting seat Ⅱ	1	

图76/Fig76.	货叉/FORK

FD20/25/30/35（T）、FG(L)20/25/30/35（T)

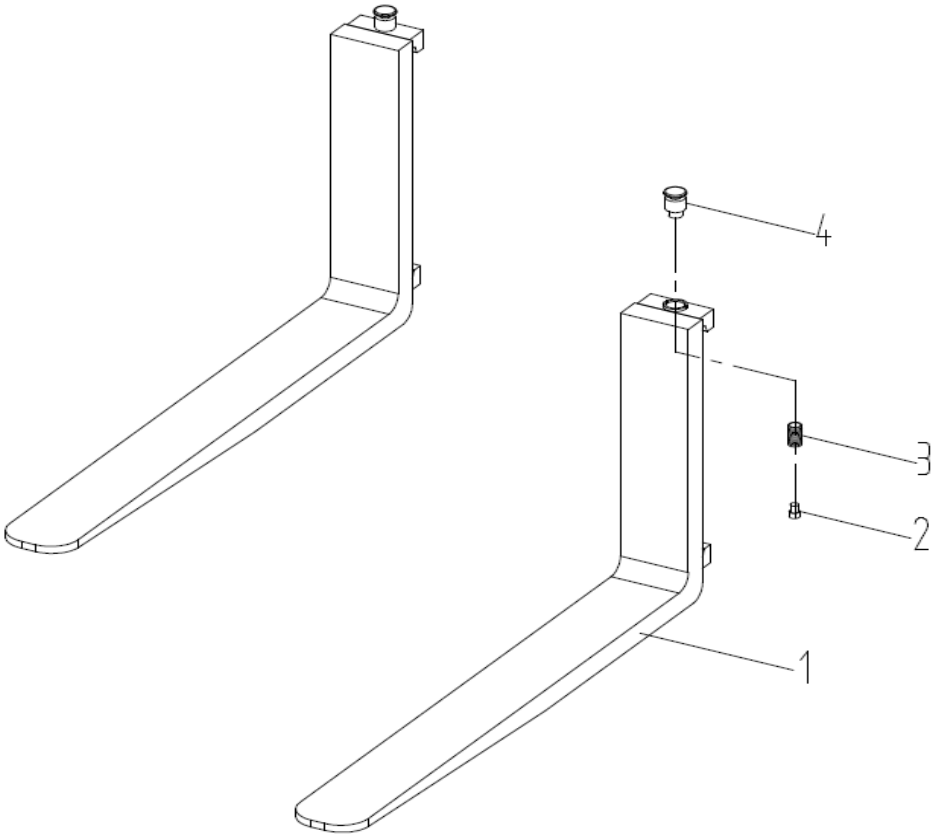

序号 Item No.	ID No	代号 Part No.	名称 Description	数量 Q' ty	备注 Remark
1	69136260	M2038003000	Fork ass'y	2	2t AS NEEDED
-	N/A	M2538003000	Fork ass'y	2	2.5t AS NEEDED
-	N/A	M3038003000	Fork ass'y	2	3t AS NEEDED
-	N/A	M3538002000	Fork ass'y	2	3.5t AS NEEDED
2	69022108	M3038003101	Positioning pin	2	
3	69136807	M2038003102	Spring	2	2.5t
-	69136808	M3038003102	Spring	2	3t
-	69136809	M3538002102	Spring	2	3.5t
4	69136810	M3038003103	Handle	2	

图76/Fig76.	货叉/FORK

FD20/25/30/35（T）、FG(L)20/25/30/35（T)

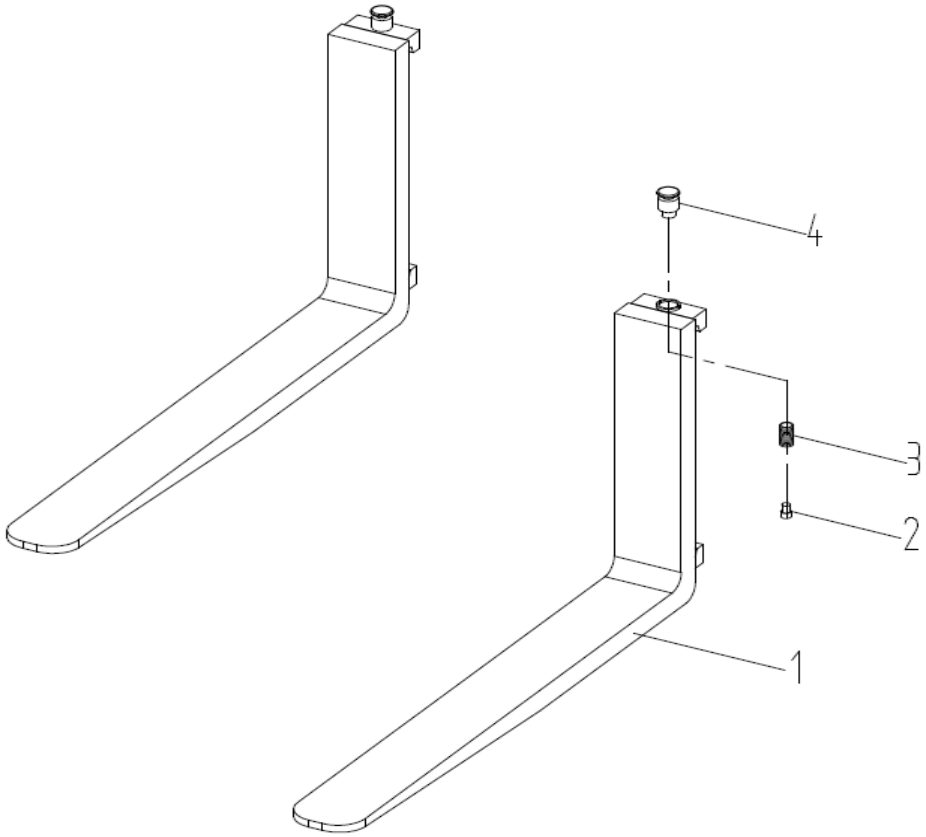

货叉选用表 Fork optional parts

LENGTH	ID No.	PART NO.	ID No.	REMARKS OR SERIAL NO.
		2.0t		
1070	69110782	20380-HC-100*1070-Blac	69106093	标准
1220	69110779	20380-HC-100*1220-Blac	69110648	
1370	69110778	20380-HC-100*1370-Blac	69110646	
1520	69110777	20380-HC-100*1520-Blac	69110645	
1670	69110776	20380-HC-100*1670-Blac	69110643	
1820	69110775	20380-HC-100*1820-Blac	69110642	
1970	69110774	20380-HC-100*1970-Blac	69110641	
2120	69110771	20380-HC-100*2120-Blac	69110639	
2300	69110769	20380-HC-100*2300-Blac	69110637	
2440	69110768	20380-HC-100*2440-Blac	69110636	

图76/Fig76.	货叉/FORK

FD20/25/30/35（T）、FG(L)20/25/30/35（T)

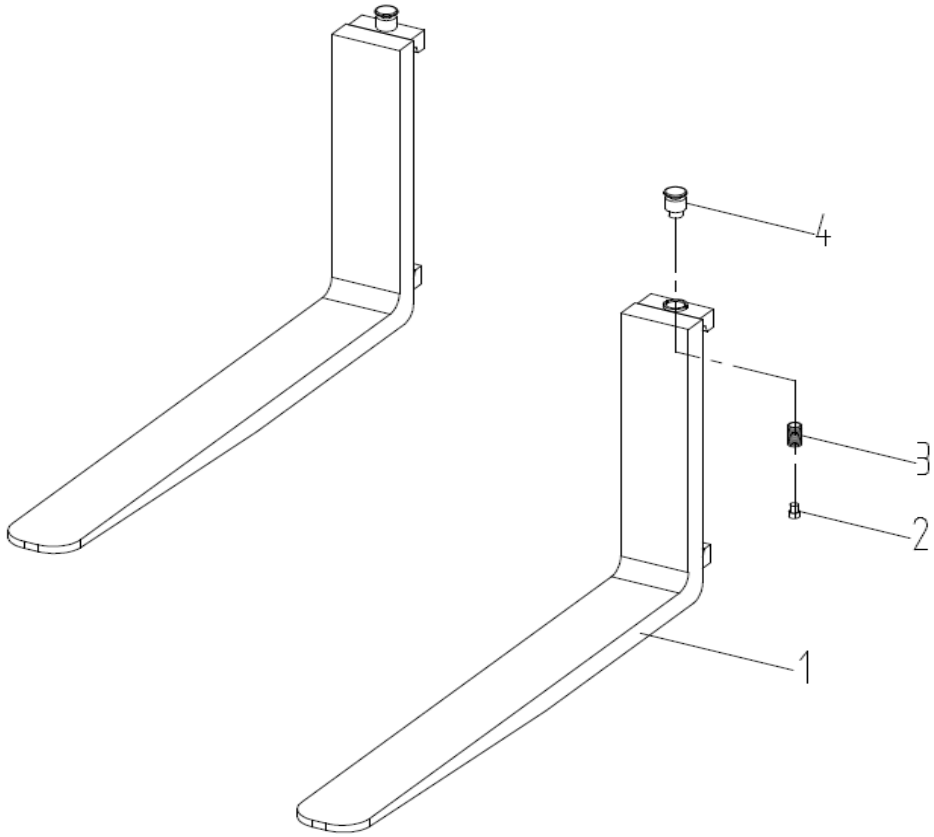

货叉选用表 Fork optional parts

长度LENGTH	ID No.	PART NO. 3.0t	ID No.	REMARKS OR SERIAL NO.
1070	69105706	M30380-HC-1070-Black	69106094	标准
1220	69110735	M30380-HC-1220-Black	69110696	
1370	69110730	M30380-HC-1370-Black	69110695	
1520	69110726	M30380-HC-1520-Black	69110693	
1670	69110723	M30380-HC-1670-Black	69110691	
1820	69110720	M30380-HC-1820-Black	69110689	
1970	69110717	M30380-HC-1970-Black	69110686	
2120	69110713	M30380-HC-2120-Black	69110684	
2300	69110709	M30380-HC-2300-Black	69110682	
2440	69110705	M30380-HC-2440-Black	69110681	

图77/Fig77.	货叉架(基本)/LIFT BRACKET (NORMAL MAST)

FD20/25/30/35（T）、FG(L)20/25/30/35（T）

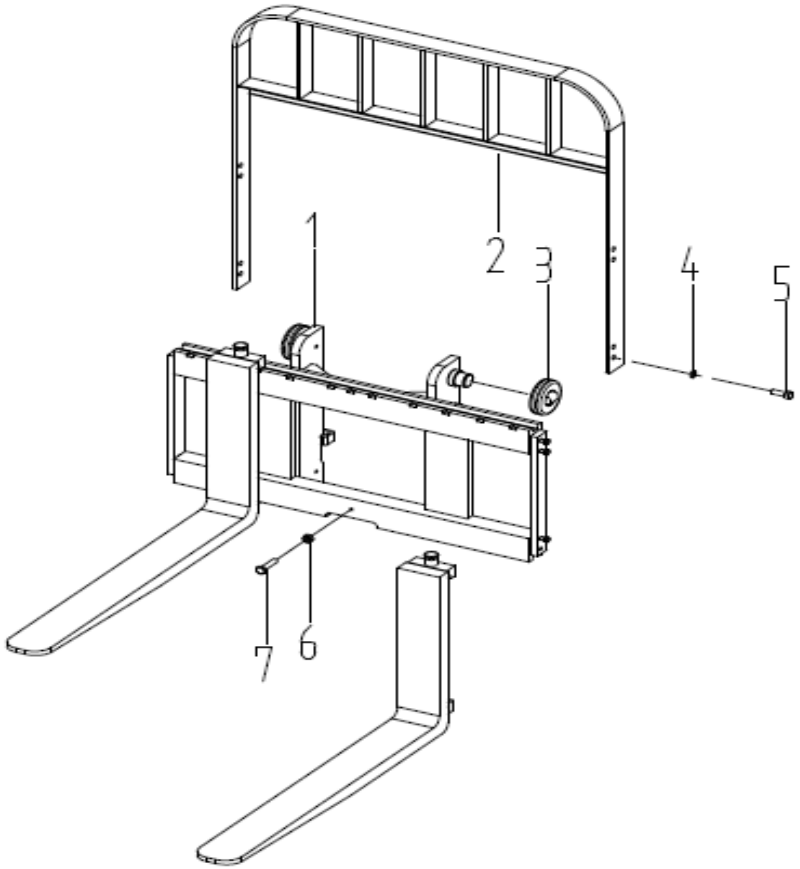

序号 Item No.	ID No.	代号 Part No.	名称 Description	数量 Q' ty	备注 Remark
1	69106084	MJ20380-03000-Black	Fork carriage	1	2-2.5t
-	69105709	MJ30380-03000-Black	Fork carriage	1	3t
-	69106087	MJ35380-03000-Black	Fork carriage	1	3.5t
2	69106077	20380A-02000-Black	Backrest	1	2-2.5t
-	69105746	30380A-02000-Black	Backrest	1	3-3.5t
3	69021690	M3038007000	Combination roller 760311NT	6	
4	69005111	GB/T93-14	Washer 14	8	
5	69000159	GB/T5786-M14*1.5*30-8.8J	Bolt M14×1.5×30	8	
6	69000103	GB/T6170-M10-8J	Nut M10	1	
7	69000128	GB/T5783-M10*30-8.8J	Bolt M10×30	1	

图78/Fig78. 货叉架(两级全自由)/LIFT BRACKET (FULL FREE 2-STAGE MAST)

FD20/25/30/35（T）、FG(L)20/25/30/35（T）

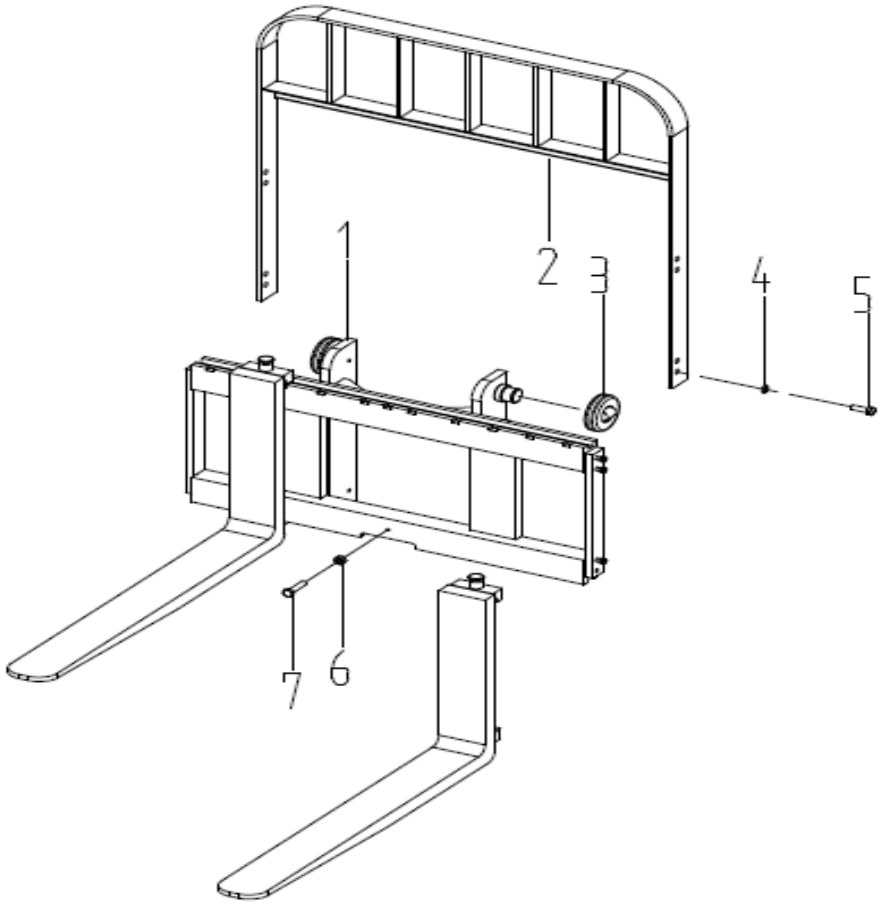

序号 Item No.	ID No.	代号 Part No.	名称 Description	数量 Q' ty	备注 Remark
1	69106234	A20482-03000-Black	Fork carriage	1	2-2.5t
-	69106317	A30482-03000-Black	Fork carriage	1	3t
-	69106497	A35482-03000-Black	Fork carriage	1	3.5t
2	69106077	20380A-02000-Black	Backrest	1	2.5t
-	69105746	30380A-02000-Black	Backrest	1	3-3.5t
3	69021690	M3038007000	Combination roller 760311NT	6	
4	69005111	GB/T93-14	Washer 14	8	
5	69000159	GB/T5786-M14*1.5*30-8.8J	Bolt M14×1.5×30	8	
6	69000103	GB/T6170-M10-8J	Nut M10	1	
7	69000128	GB/T5783-M10*30-8.8J	Bolt M10×30	1	

图79 /Fig79. 货叉架(三级全自由)/LIFT BRACKET (FULL FREE 3 STAGE MAST)

FD20/25(T)、FG(L)20-25(T)

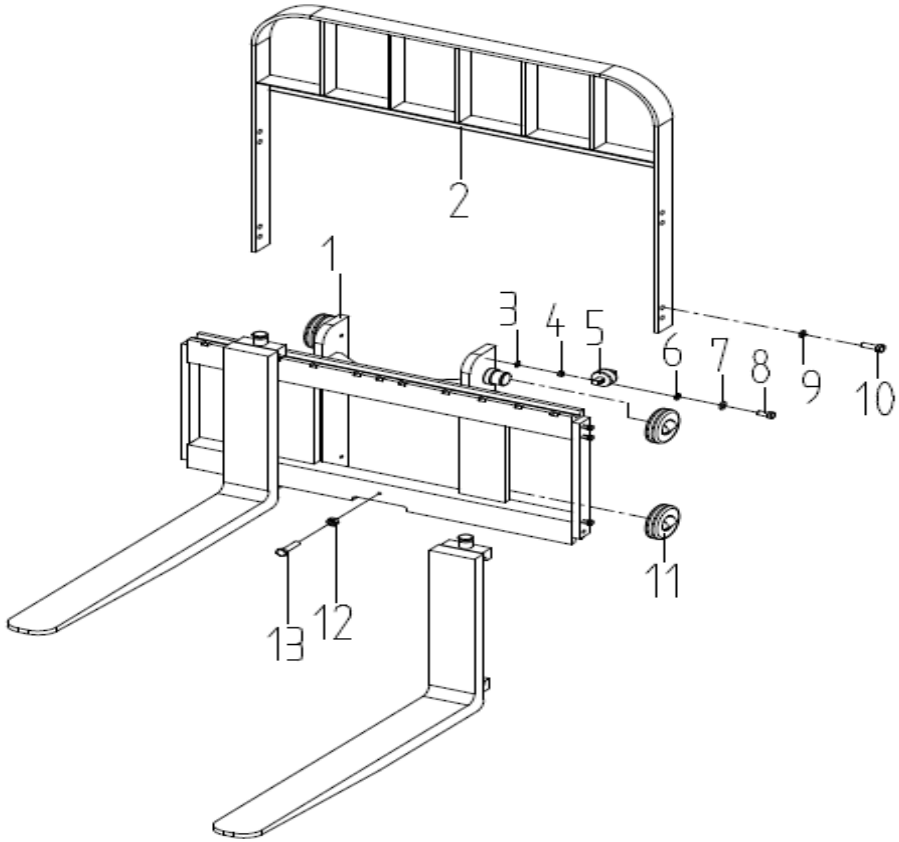

序号 Item No.	ID No.	代号 Part No.	名称 Description	数量 Q' ty	备注 Remark
1	69106243	A20484-01000-Black	Fork carriage	1	2-2.5t
2	69106077	20380A-02000-Black	Backrest	1	2-2.5t
3	69065211	M3038000006	Adjusting shimⅡ	2组	
4	69065210	M3038000012	Washer	2组	
5	69021881	M3038010000	Side roller C2-5	2	
6	69000250	GB/T97.1-10	Washer 10	4	
7	69000053	GB/T93-10	Washer 10	4	
8	69024917	GB/T5786-M10*1.25*45-8.8I	Bolt M10×1.25×45	4	
9	69005111	GB/T93-14	Washer 14	8	
10	69000159	GB/T5786-M14*1.5*30-8.8I	Bolt M14×1.5×30	8	
11	69021690	M3038007000	Combination roller 760311NT	4	
12	69000103	GB/T6170-M10-8J	Nut M10	1	
13	69000128	GB/T5783-M10*30-8.8J	Bolt M10×30	1	

图79/Fig79. 货叉架(三级全自由)/LIFT BRACKET (FULL FREE 3 STAGE MAST)

FD30/35(T) 、FG(L)30-35(T)

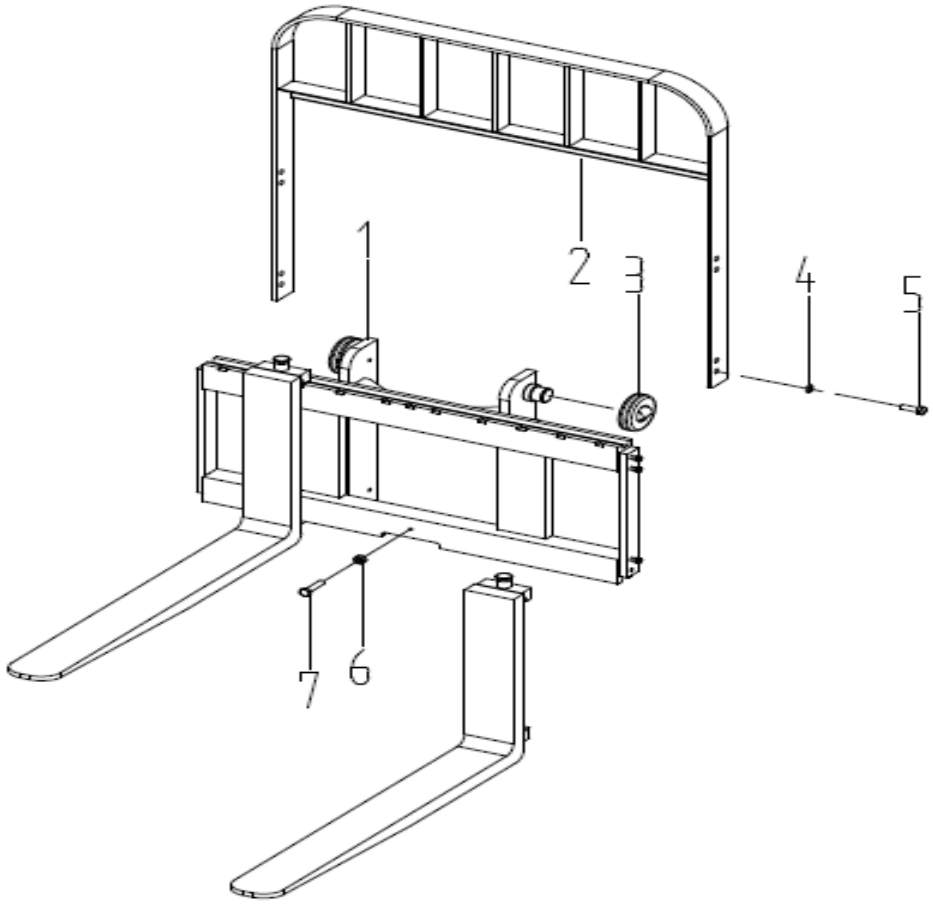

序号 Item No.	ID No.	代号 Part No.	名称 Description	数量 Q' ty	备注 Remark
1	69106365	A30484-01000C-Black	Fork carriage	1	3t
-	69106555	A35484-01000C-Black	Fork carriage	1	3.5t
2	69105746	30380A-02000-Black	Backrest	1	3-3.5t
3	69021690	M3038007000	Combination roller 760311NT	6	
4	69005111	GB/T93-14	Washer 14	8	
5	69000159	GB/T5786-M14*1.5*30-8.8J	Bolt M14×1.5×30	8	
6	69000103	GB/T6170-M10-8J	Nut M10	1	
7	69000128	GB/T5783-M10*30-8.8J	Bolt M10×30	1	

图80/Fig80. 门架(基本型)/MAST(NORMAL MAST)

FD20/25/30/35（T）、FG(L)20/25/30/35（T)

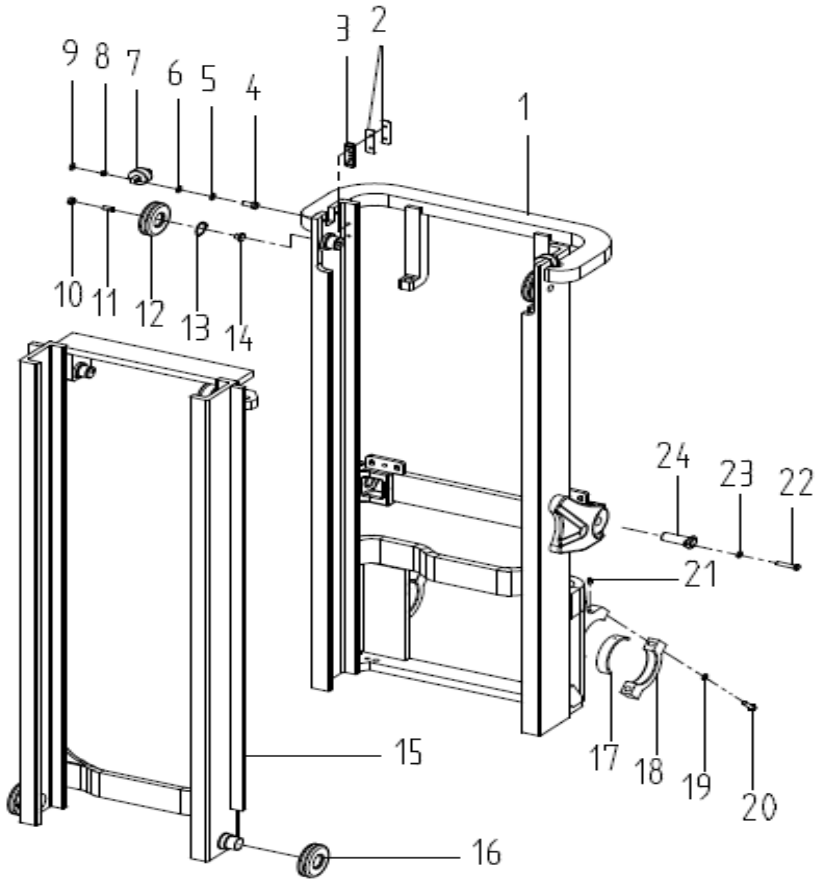

序号 Item No.	ID No.	代号 Part No.	名称 Description	数量 Q' ty	备注 Remark
1	N/A	MJ20380-01000	Outer mast ass'y	1	2-2.5t AS NEEDED
-	N/A	MJ30380-01000	Outer mast ass'y	1	3t AS NEEDED
-	N/A	MJ35380-01000	Outer mast ass'y	1	3.5t AS NEEDED
2	69009498	M3038000004/0.5	Adjusting shim	按需 On	
3	69034185	A30480-00001	Slipper	2	
4	69000140	GB/T5786-M12*1.25*45-8.8I	Bolt M10×1.25×45	4	
5	69000053	GB/T93-10	Washer 10	4	
6	69000250	GB/T97.1-10	Washer 10	4	
7	69021881	M3038010000	Side roller C2-5	2	
8	69008569	M3038000005	Washer	4	
9	69065211	M3038000006	Adjusting shimⅡ	2组	
10	69011485	GB/T6171-M10*1-8J	Nut M10×1	2	
11	69021681	GB/T79-M10*1*45	Screw M10×1×45	2	
12	69002362	M3038008000	Single roller 130309KT	2	
13	69000071	GB/T894.1-Φ45	Snap ring 45	2	
14	69012654	M3038000010	Adjusting shim	2	
15	N/A	A20480-02000	Inner mast ass'y	1	2-2.5t AS NEEDED
-	N/A	A30480-02000	Inner mast ass'y	1	3t AS NEEDED
-	N/A	A35480-02000	Inner mast ass'y	1	3.5t AS NEEDED
16	69021690	M3038007000	Combination roller 760311NT	2	
17	69012068	M3038000002	Bearing liner	2	
18	69004874	M3038000001	Bearing cap	2	
19	69000056	GB/T93-16	Washer 16	4	
20	69042802	GB/T5785-M16*1.5*70-8.8I	Bolt M16×1.5×70	4	
21	69003941	JB/T7940.1-M10*1	Nipple M10×1	2	

图80/Fig80. 门架(基本型)/MAST(NORMAL MAST)

FD20/25/30/35（T）、FG(L)20/25/30/35（T）

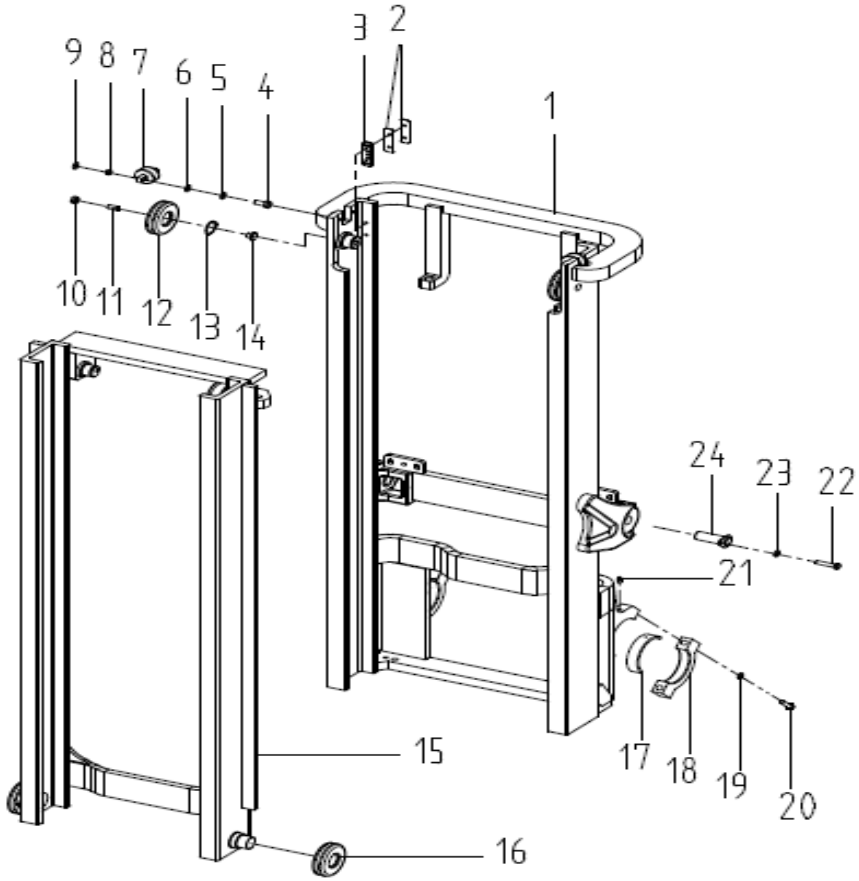

序号 Item No.	ID No.	代号 Part No.	名称 Description	数量 Q' ty	备注 Remark
22	69000123	GB/T5783-M10*20-8.8J	Bolt M10×20	2	
23	69000053	GB/T93-10	Washer 10	2	
24	69034183	A30480-04000	Pin shaft	2	

图80/Fig80.	门架(基本型)/MAST(NORMAL MAST)

FD20/25/30/35（T）、FG(L)20/25/30/35（T)

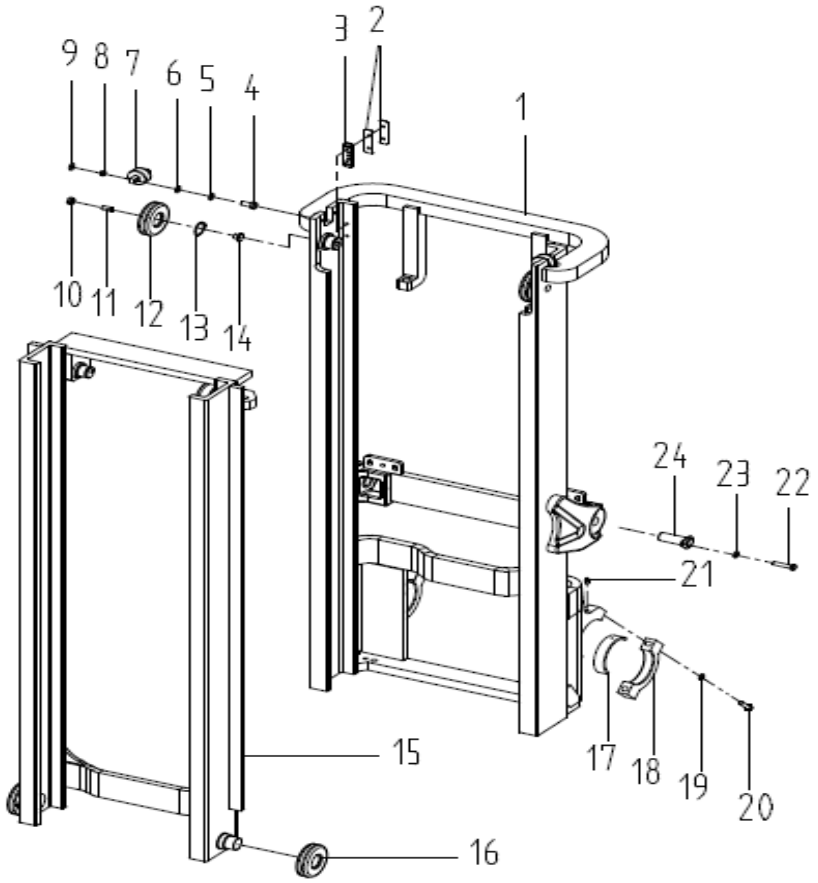

门架选用表 Mast Optional Parts

起升高度L IFTING HEIGHT	外门架总成 OUTER MAST				备注 REMARK
	ID No.	2-2.5t	ID No.	3t	
3000	69101222	J20380-01000-3.0M-Blac	69101321	01000-3.	标准 Standard
3300	69101223	J20380-01000-3.3M-Blac	69101322	01000-3.	
3500	69101224	J20380-01000-3.5M-Blac	69101323	01000-3.	
3700	69101226	J20380-01000-3.7M-Blac	69101325	01000-3.	
4000	69101227	J20380-01000-4.0M-Blac	69101326	01000-4.	
4500	69101229	J20380-01000-4.5M-Blac	69101328	01000-4.	
5000	69101231	J20380-01000-5.0M-Blac	69101330	01000-5.	
5500	69101232	J20380-01000-5.5M-Blac	69101331	01000-5.	
6000	69101233	J20380-01000-6.0M-Blac	69101332	01000-6.	

图80/Fig80. 门架(基本型)/MAST(NORMAL MAST)

FD20/25/30/35（T）、FG(L)20/25/30/35（T)

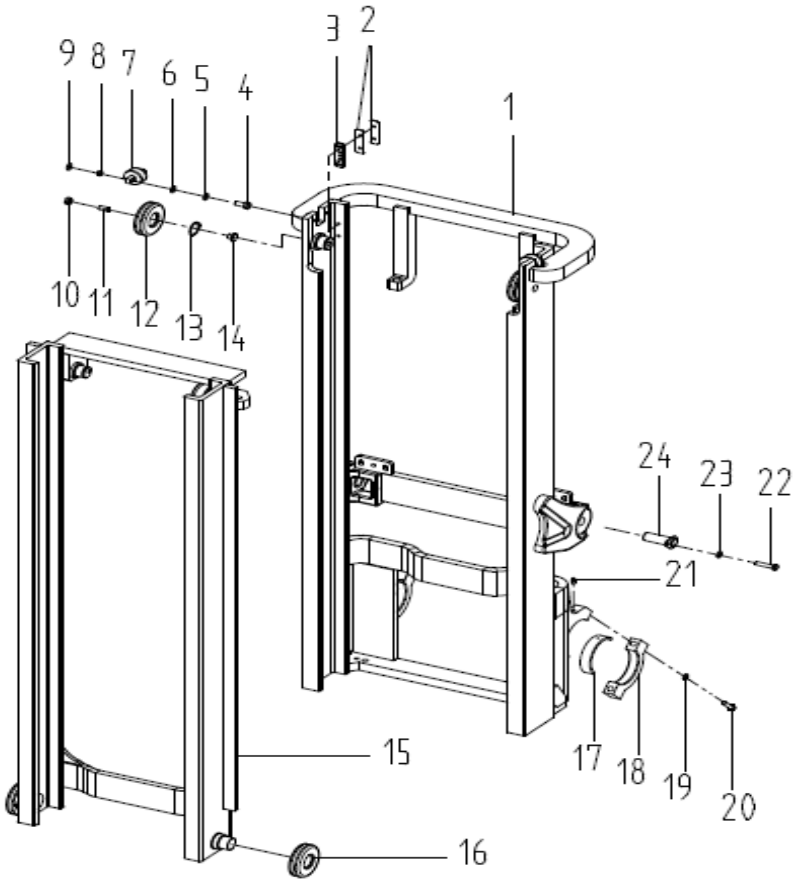

门架选用表 Mast Optional Parts

起升高度LIFTING HEIGHT	外门架总成 OUTER MAST				备注 REMARK
	ID No.	3.5t			
3000	69108751	J35380-01000-3.0M-Black			标准 Standard
3300	69101422	J35380-01000-3.3M-Black			
3500	69101423	J35380-01000-3.5M-Black			
3700	69101425	J35380-01000-3.7M-Black			
4000	69101426	J35380-01000-4.0M-Black			
4500	69101428	J35380-01000-4.5M-Black			
5000	69101430	J35380-01000-5.0M-Black			
5500	69101431	J35380-01000-5.5M-Black			
6000	69101432	J35380-01000-6.0M-Black			

图80/Fig80. 门架(基本型)/MAST(NORMAL MAST)

FD20/25/30/35（T）、FG(L)20/25/30/35（T)

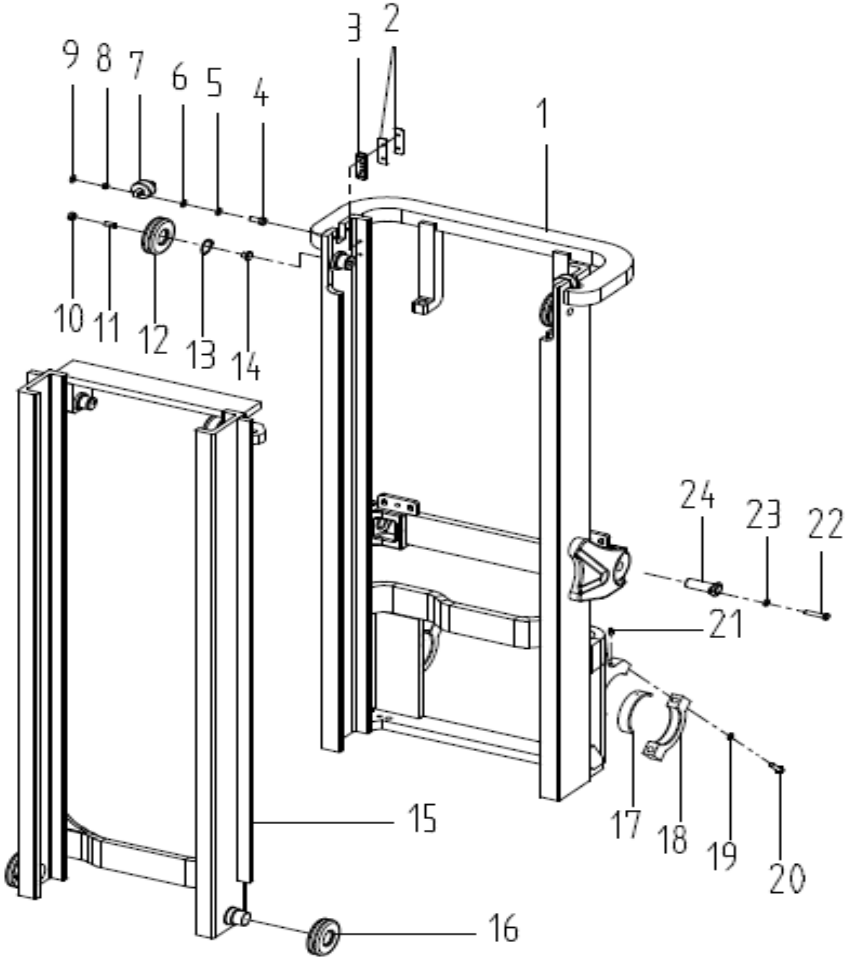

门架选用表 Mast Optional Parts					
起升高度L IFTING HEIGHT	内门架总成 INNER MAST				备注 REMARK
	ID No.	2-2.5t	ID No.	3t	
3000	69101237	J20380-02000-3.0M-Blac	69101336	02000-3.	标准 Standard
3300	69101238	J20380-02000-3.3M-Blac	69101337	02000-3.	
3500	69101239	J20380-02000-3.5M-Blac	69101338	02000-3.	
3700	69101241	J20380-02000-3.7M-Blac	69101340	02000-3.	
4000	69101242	J20380-02000-4.0M-Blac	69101341	02000-4.	
4500	69101244	J20380-02000-4.5M-Blac	69101343	02000-4.	
5000	69101246	J20380-02000-5.0M-Blac	69101345	02000-5.	
5500	69101247	J20380-02000-5.5M-Blac	69101346	02000-5.	
6000	69101248	J20380-02000-6.0M-Blac	69101347	02000-6.	

图80/Fig80.	门架(基本型)/MAST(NORMAL MAST)

FD20/25/30/35（T）、FG(L)20/25/30/35（T）

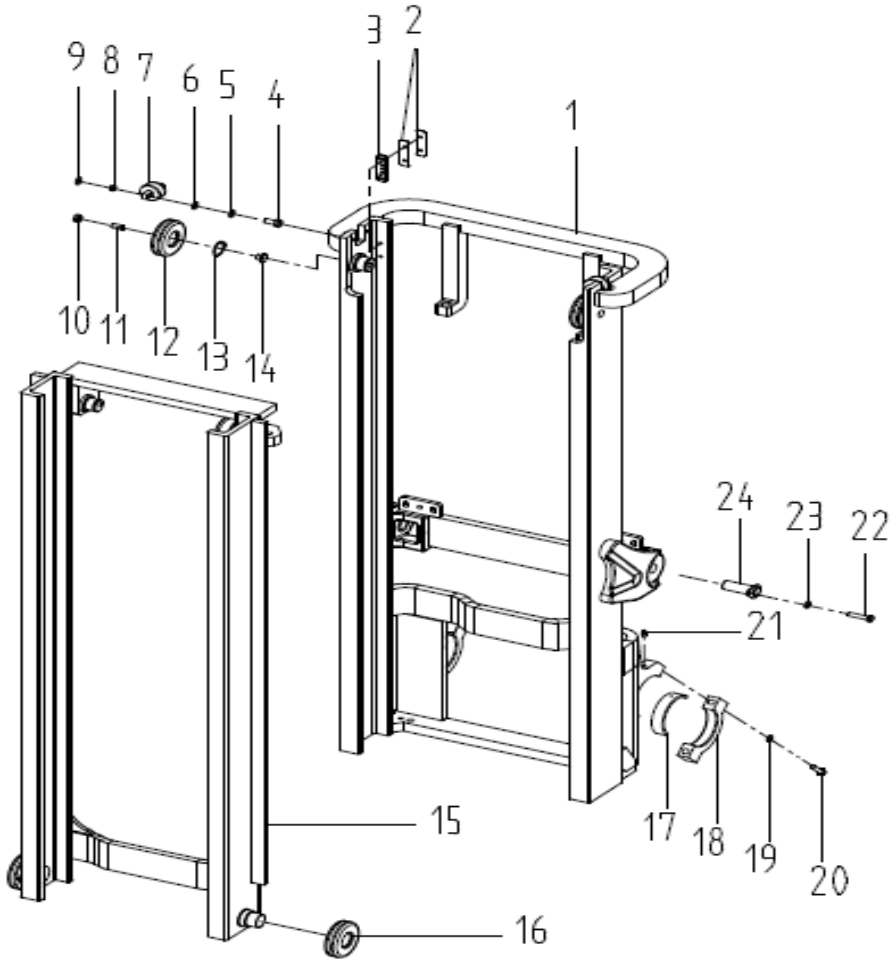

门架选用表 Mast Optional Parts

起升高度LIFTING HEIGHT	内门架总成 INNER MAST				备注 REMARK
	ID No.	3.5t			
3000	69101435	J35380-02000-3.0M-Black			标准 Standard
3300	69101436	J35380-02000-3.3M-Black			
3500	69101437	J35380-02000-3.5M-Black			
3700	69101439	J35380-02000-3.7M-Black			
4000	69101440	J35380-02000-4.0M-Black			
4500	69101442	J35380-02000-4.5M-Black			
5000	69101444	J35380-02000-5.0M-Black			
5500	69101445	J35380-02000-5.5M-Black			
6000	69101446	J35380-02000-6.0M-Black			

图81/Fig81. 门架(二级全自由)/MAST(FULL FREE 2-STAGE MAST)

FD20/25/30/35（T）、FG(L)20/25/30/35（T)

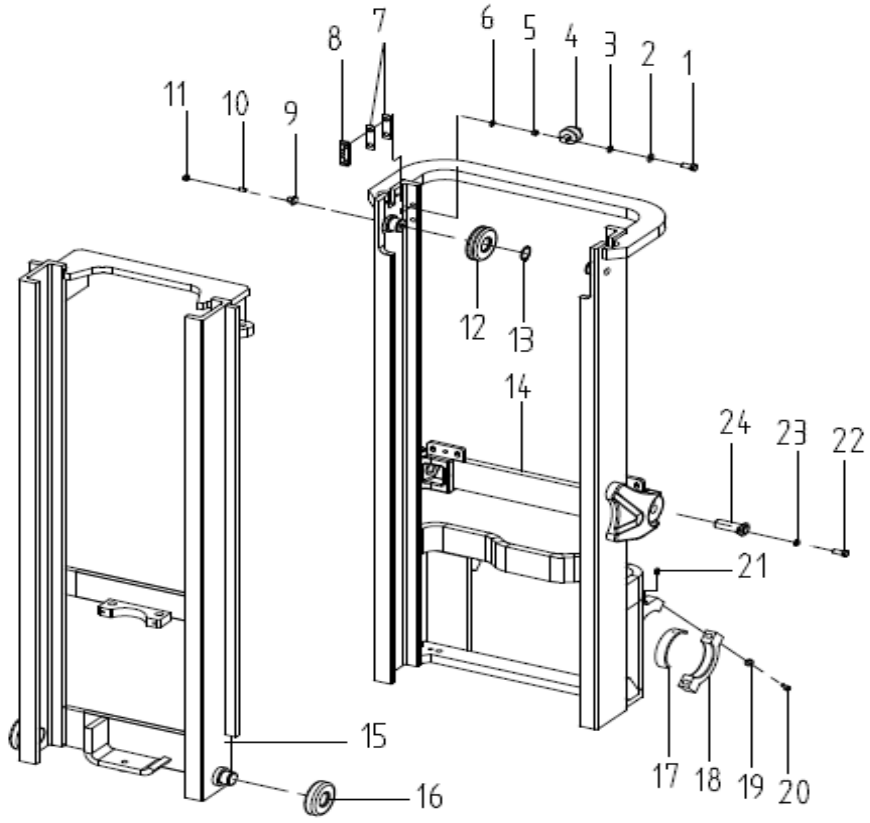

序号 Item No.	ID No.	代号 Part No.	名称 Description	数量 Q' ty	备注 Remark
1	69024917	GB/T5786-M10*1.25*45-8.8I	Bolt M10×1.25×45	4	
2	69000053	GB/T93-10	Washer 10	4	
3	69000250	GB/T97.1-10	Washer 10	4	
4	69021881	M3038010000	Side roller C2-5	2	
5	69008569	M3038000005	Washer	4	
6	69065211	M3038000006	Adjusting shimⅡ	2组	
7	69009498	M3038000004/0.5	Adjusting shimⅡ	按需 On	
8	69034185	A30480-00001	Slide block	2	
9	69012654	M3038000010	Adjusting shim	2	
10	69006729	GB/T77-M10*45-12.9J	Screw M10×1×45	2	
11	69011485	GB/T6171-M10*1-8J	Nut M10×1	2	
12	69002362	M3038008000	Single roller 130309KT	2	
13	69000071	GB/T894.1-Φ45	Axial circlip 45	2	
14	N/A	MJ20382-01000	Outer mast ass'y	1	2-2.5t AS NEEDED
-	N/A	MJ30382-01000	Outer mast ass'y	1	3t AS NEEDED
-	N/A	MJ35382-01000	Outer mast ass'y	1	3.5t AS NEEDED
15	N/A	MJ20382-02000	Inner mast ass'y	1	2-2.5t AS NEEDED
-	N/A	MJ30382-02000	Inner mast ass'y	1	3t AS NEEDED
-	N/A	MJ35382-02000	Inner mast ass'y	1	3.5t AS NEEDED
16	69021690	M3038007000	Combination roller 760311NT	2	
17	69012068	M3038000002	bearing liner	2	
18	69004874	M3038000001	bearing cap	2	
19	69000056	GB/T93-16	Washer 16	4	
20	69042802	GB/T5785-M16*1.5*70-8.8I	Bolt M16×1.5×70	4	
21	69003941	JB/T7940.1-M10*1	Oil cup M10×1	2	

图81/Fig81. 门架(二级全自由)/MAST(FULL FREE 2-STAGE MAST)

FD20/25/30/35（T）、FG(L)20/25/30/35（T）

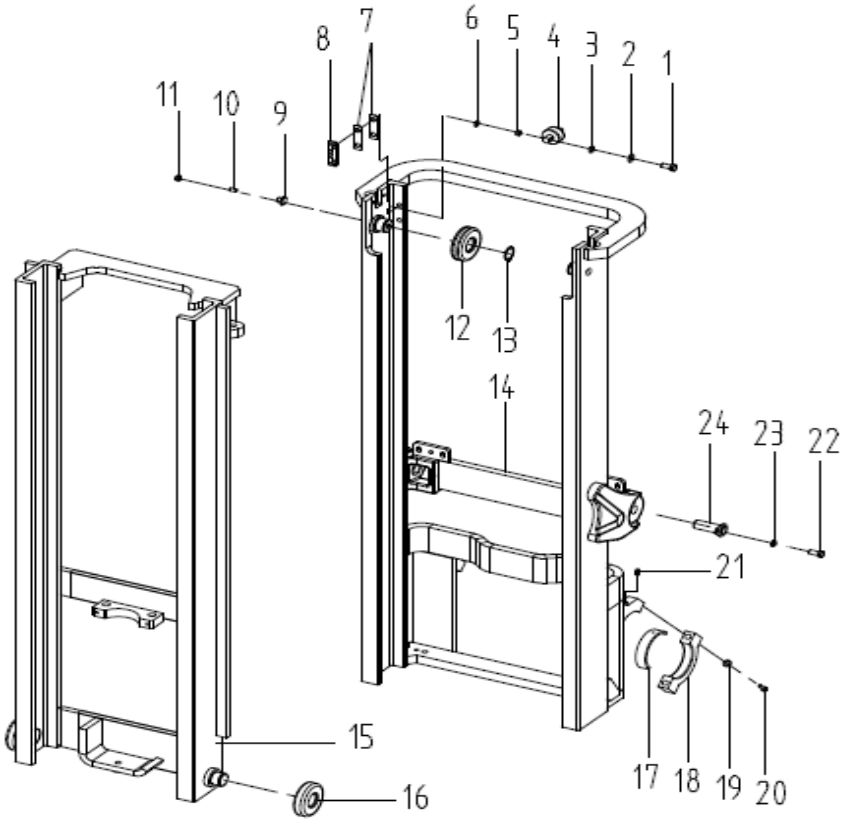

序号 Item No.	ID No.	代号 Part No.	名称 Description	数量 Q' ty	备注 Remark
22	69000123	GB/T5783-M10*20-8.8J	Bolt M10×20	2	
23	69000053	GB/T93-10	Washer 10	2	
24	69034183	A30480-04000	Pin shaft	2	

图81/Fig81. 门架(二级全自由)/MAST(FULL FREE 2-STAGE MAST)

FD20/25/30/35（T）、FG(L)20/25/30/35（T）

门架选用表 Mast Optional Parts

起升高度L IFTING HEIGHT	外门架总成 OUTER MAST				备注 REMARK
	ID No.	2-2.5t	ID No.	3t	
3000	69101264	J20382-01000-3.0M-Blac	69108739	)1000-3.	
3300	69101265	J20382-01000-3.3M-Blac	69101364	)1000-3.	

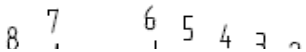

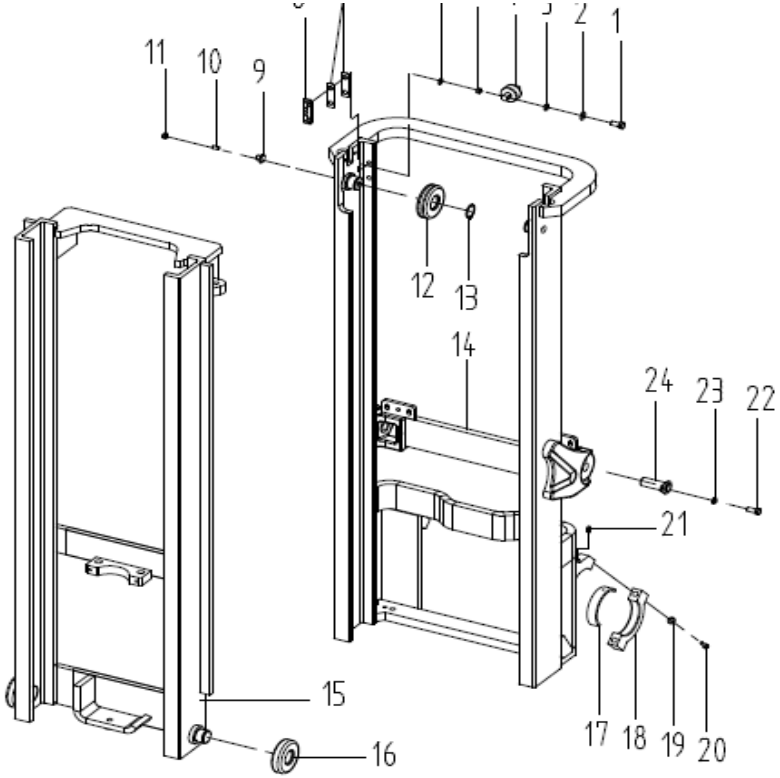

3500	69101266	J20382-01000-3.5M-Blac	69101365	01000-3.	
3700	69101267	J20382-01000-3.7M-Blac	69101366	01000-3.	
4000	69101268	J20382-01000-4.0M-Blac	69101367	01000-4.	
4500	69101269	J20382-01000-4.5M-Blac	69101368	01000-4.	
5000	69101270	J20382-01000-5.0M-Blac	69101369	01000-5.	
5500	69101271	J20382-01000-5.5M-Blac	69101370	01000-5.	
6000	69101272	J20382-01000-6.0M-Blac	69101371	01000-6.	

图81/Fig81.	门架(二级全自由)/MAST(FULL FREE 2-STAGE MAST)

FD20/25/30/35（T）、FG(L)20/25/30/35（T)

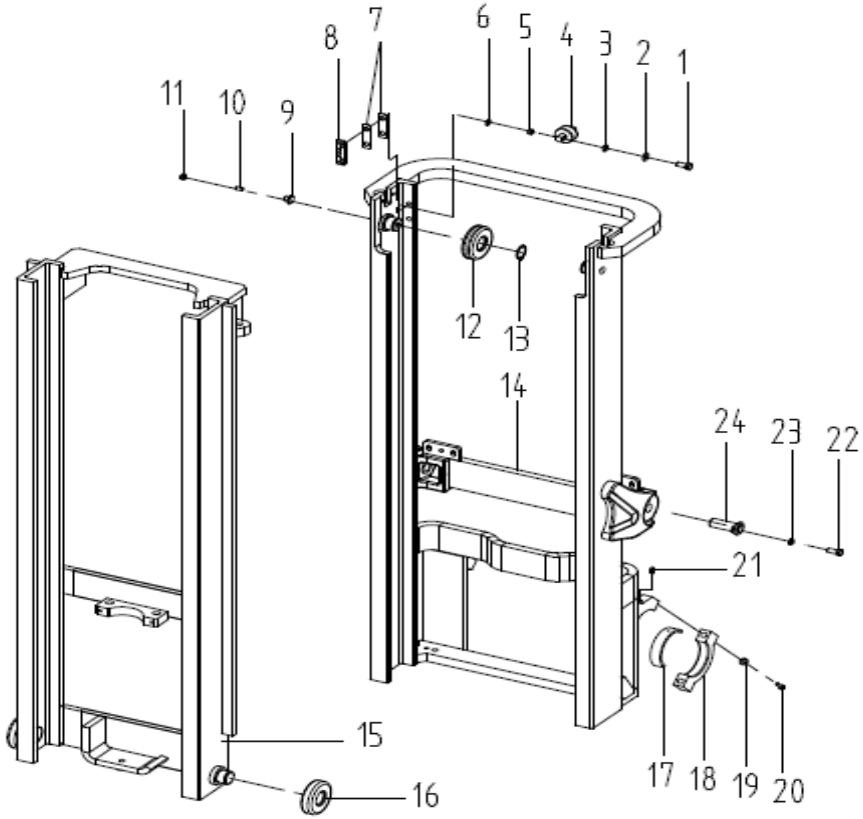

门架选用表 Mast Optional Parts

起升高度LIFTING HEIGHT	外门架总成 OUTER MAST				备注 REMARK
	ID No.	3.5t			
3000	69108752	J35382-01000-3.0M-Black			
3300	69108753	J35382-01000-3.3M-Black			
3500	69108754	J35382-01000-3.5M-Black			
3700	69101465	J35382-01000-3.7M-Black			
4000	69101466	J35382-01000-4.0M-Black			
4500	69101467	J35382-01000-4.5M-Black			
5000	69101468	J35382-01000-5.0M-Black			
5500	69101471	J35382-01000-5.5M-Black			
6000	69101472	J35382-01000-6.0M-Black			

图81/Fig81.	门架(二级全自由)/MAST(FULL FREE 2-STAGE MAST)

FD20/25/30/35（T）、FG(L)20/25/30/35（T)

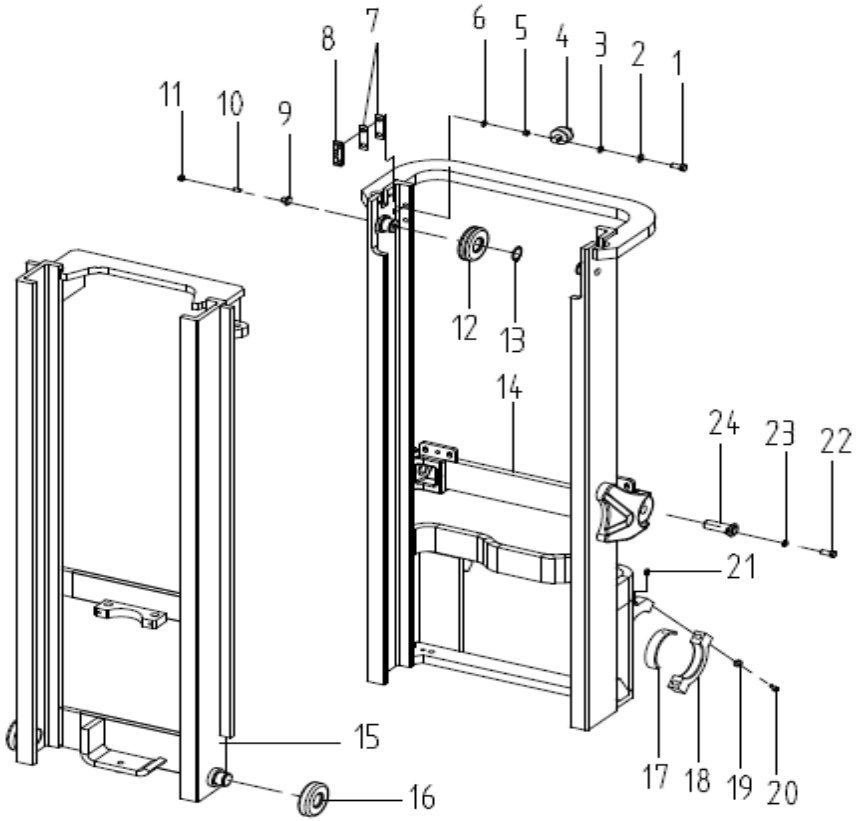

门架选用表 Mast Optional Parts

起升高度LIFTING HEIGHT	内门架总成 INNER MAST				备注 REMARK
	ID No.	2-2.5t	ID No.	3t	
3000	69101273	J20382-02000-3.0M-Blac	69101372	02000-3.	
3300	69101274	J20382-02000-3.3M-Blac	69101373	02000-3.	
3500	69101275	J20382-02000-3.5M-Blac	69101374	02000-3.	
3700	69101276	J20382-02000-3.7M-Blac	69101375	02000-3.	
4000	69101277	J20382-02000-4.0M-Blac	69101376	02000-4.	
4500	69101278	J20382-02000-4.5M-Blac	69101377	02000-4.	
5000	69101279	J20382-02000-5.0M-Blac	69101378	02000-5.	
5500	69101280	J20382-02000-5.5M-Blac	69101379	02000-5.	
6000	69101281	J20382-02000-6.0M-Blac	69101380	02000-6.	

图81/Fig81.	门架(二级全自由)/MAST(FULL FREE 2-STAGE MAST)

FD20/25/30/35（T）、FG(L)20/25/30/35（T)

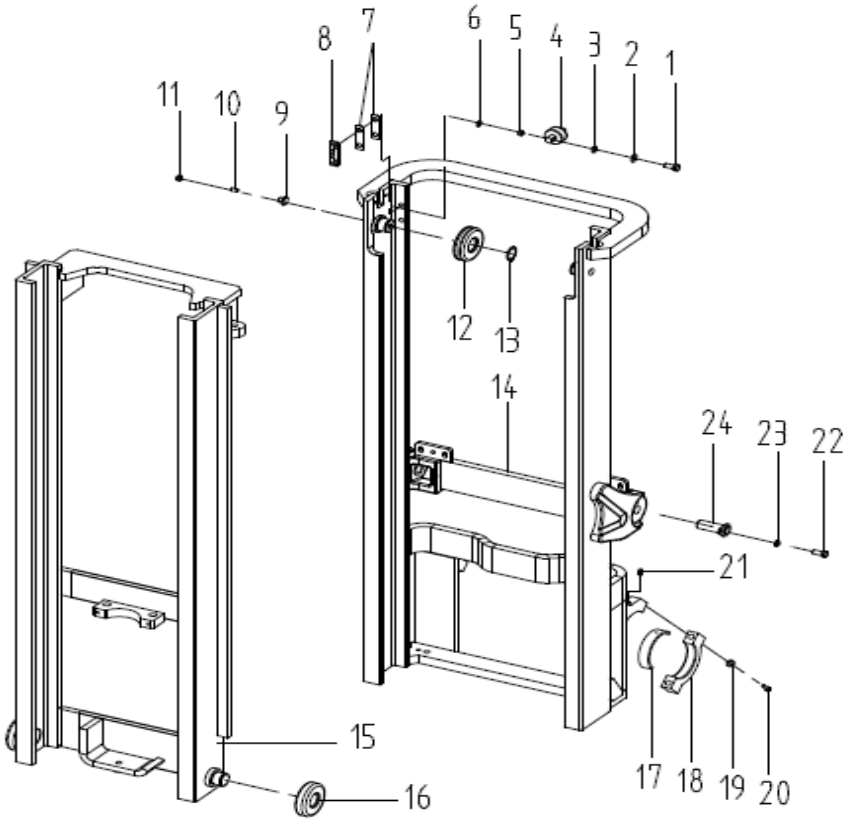

门架选用表 Mast Optional Parts

起升高度LIFTING HEIGHT	内门架总成 INNER MAST				备注 REMARK
	ID No.	3.5t			
3000	69101473	J35382-02000-3.0M-Black			
3300	69101474	J35382-02000-3.3M-Black			
3500	69101475	J35382-02000-3.5M-Black			
3700	69101476	J35382-02000-3.7M-Black			
4000	69101477	J35382-02000-4.0M-Black			
4500	69101478	J35382-02000-4.5M-Black			
5000	69101479	J35382-02000-5.0M-Black			
5500	69101480	J35382-02000-5.5M-Black			
6000	69101481	J35382-02000-6.0M-Black			

图82/Fig82. 门架(三级全自由)/MAST(FULL FREE 3-STAGE MAST)

FD20/25/30/35（T）、FG(L)20/25/30/35（T）

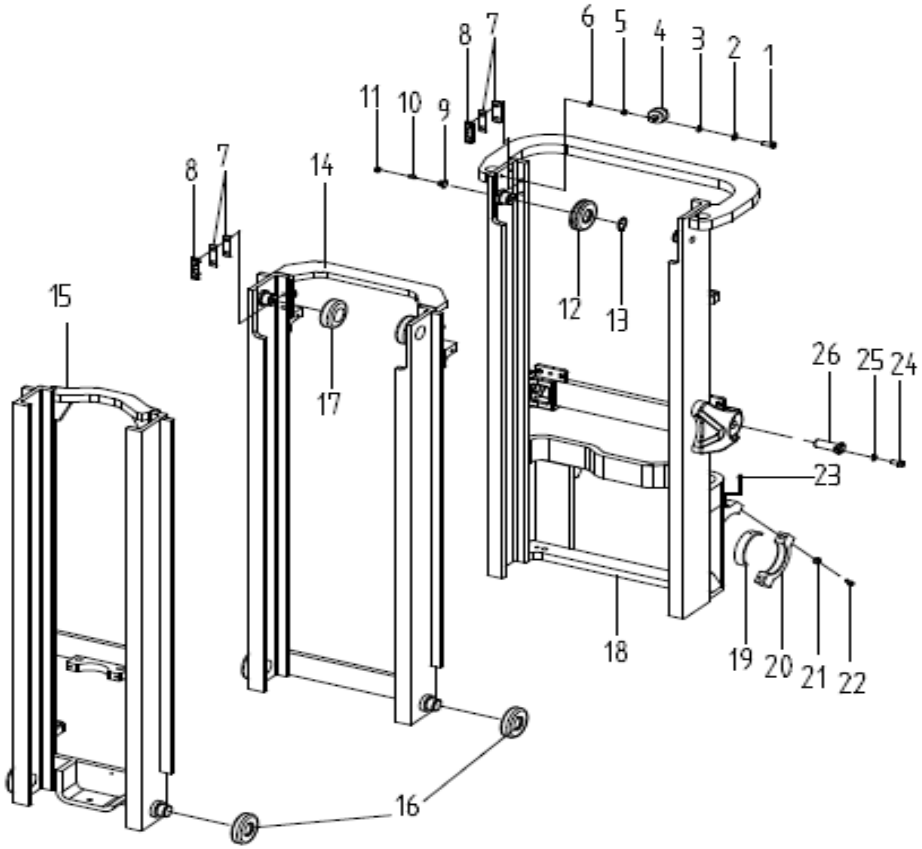

序号 Item No.	ID No.	代号 Part No.	名称 Description	数量 Q' ty	备注 Remark
1	69024917	GB/T5786-M10*1.25*45-8.8I	Bolt M10×1.25×45	4	
2	69000053	GB/T93-10	Washer 10	4	
3	69000250	GB/T97.1-10	Washer 10	4	
4	69021881	M3038010000	Side roller C2-5	2	
5	69065210	M3038000012	Adjusting shim	2组	
6	69012066	M3038000006/0.5	Adjusting shimⅡ	2组	
7	69009498	M3038000004/0.5	Adjusting shim	4组	
8	69034185	A30480-00001	Slide block	2	
9	69012654	M3038000010	Adjusting shim	2	
10	69006729	GB/T77-M10*45-12.9J	Screw M10×1×45	2	
11	69011485	GB/T6171-M10*1-8J	Nut M10×1	2	
12	69002362	M3038008000	Single Roller 130309KT	2	
13	69000071	GB/T894.1-Φ45	Snap ring 45	2	
14	N/A	A20484-04000	Middle mast ass'y	1	2-2.5t AS NEEDED
-	N/A	A30484-03000	Middle mast ass'y	1	3t AS NEEDED
-	N/A	A35484-03000	Middle mast ass'y	1	3.5t AS NEEDED
15	N/A	MJ20384-01000	Inner mast ass'y	1	2-2.5t AS NEEDED
-	N/A	MJ30384-01000	Inner mast ass'y	1	3t AS NEEDED
-	N/A	MJ35384-01000	Inner mast ass'y	1	3.5t AS NEEDED
16	69021690	M3038007000	Combination roller 760311NT	4	
17	69021689	M30074006000	Combination roller 760211NT	2	
18	N/A	MJ20384-02000	Outer mast ass'y	1	2-2.5t AS NEEDED
-	N/A	MJ30384-02000	Outer mast ass'y	1	3t AS NEEDED
-	N/A	MJ35384-02000	Outer mast ass'y	1	3.5t AS NEEDED
19	69012068	M3038000002	Bearing liner	2	

图82/Fig82. 门架(三级全自由)/MAST(FULL FREE 3-STAGE MAST)

FD20/25/30/35（T）、FG(L)20/25/30/35（T）

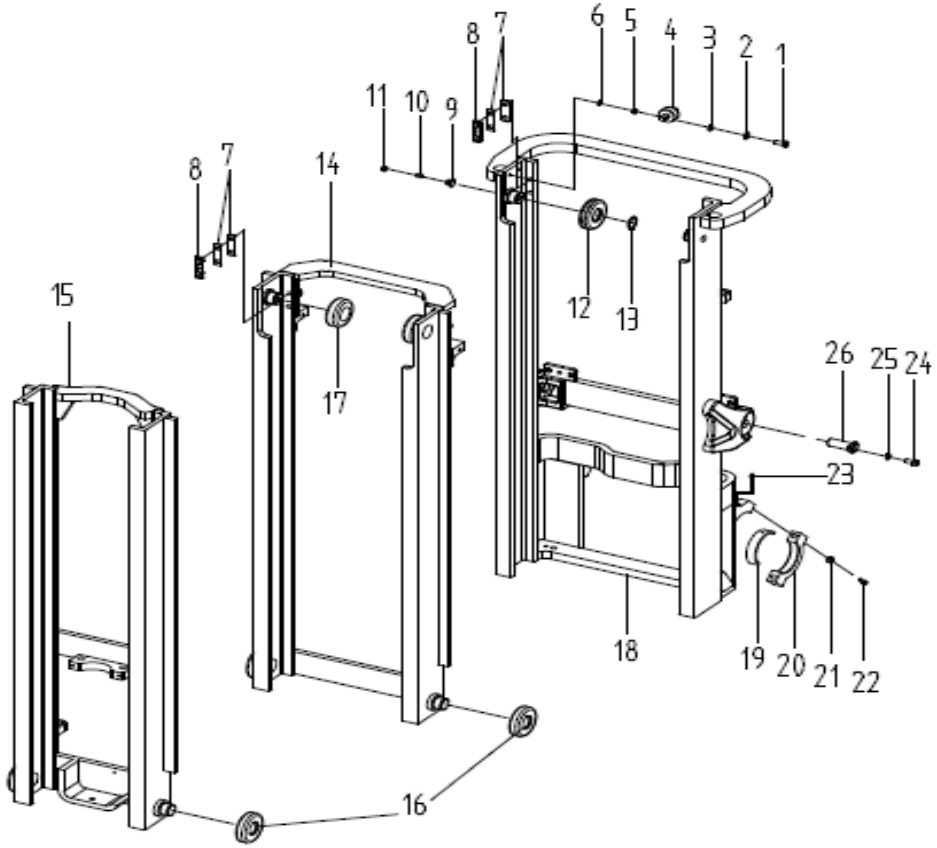

序号 Item No.	ID No.	代号 Part No.	名称 Description	数量 Q' ty	备注 Remark
20	69004874	M3038000001	Bearing cap	2	
21	69000056	GB/T93-16	Washer 16	4	
22	69042802	GB/T5785-M16*1.5*70-8.8I	Bolt M16×1.5×70	4	
23	69003941	JB/T7940.1-M10*1	Nipple M10×1	2	
24	69000123	GB/T5783-M10*20-8.8J	Bolt M10×20	2	
25	69000053	GB/T93-10	Washer 10	2	
26	69034183	A30480-04000	Pin shaft	2	

图82/Fig82.	门架(三级全自由)/MAST(FULL FREE 3-STAGE MAST)

FD20/25/30/35（T）、FG(L)20/25/30/35（T)

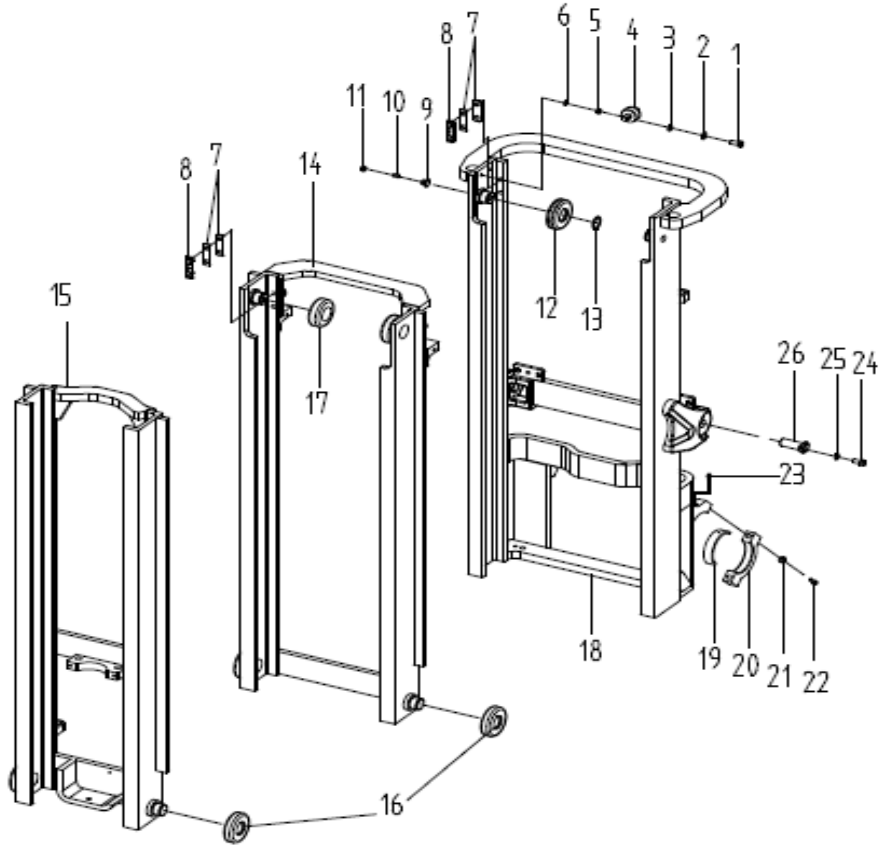

门架选用表 Mast Optional Parts

起升高度LIFTING HEIGHT	外门架总成 OUTER MAST				备注 REMARK
	ID No.	2-2.5t	ID No.	3t	
3600	69101300	J20384-02000-3.6M-Blac	69101399	02000-3.	
4000	69101301	J20384-02000-4.0M-Blac	69101400	02000-4.	
4350	69101302	J20384-02000-4.35M-Blac	69101401	2000-4.	
4500	69101303	J20384-02000-4.5M-Blac	69101402	02000-4.	
4800	69101304	J20384-02000-4.8M-Blac	69101403	02000-4.	
5000	69101305	J20384-02000-5.0M-Blac	69101404	02000-5.	
5400	69101306	J20384-02000-5.4M-Blac	69101405	02000-5.	
5500	69101307	J20384-02000-5.5M-Blac	69101406	02000-5.	
6000	69101308	J20384-02000-6.0M-Blac	69101407	02000-6.	
6500	69106275	J20384-02000-6.5M-Blac	69106414	02000-6.	

图82/Fig82.	门架(三级全自由)/MAST(FULL FREE 3-STAGE MAST)

FD20/25/30/35（T）、FG(L)20/25/30/35（T)

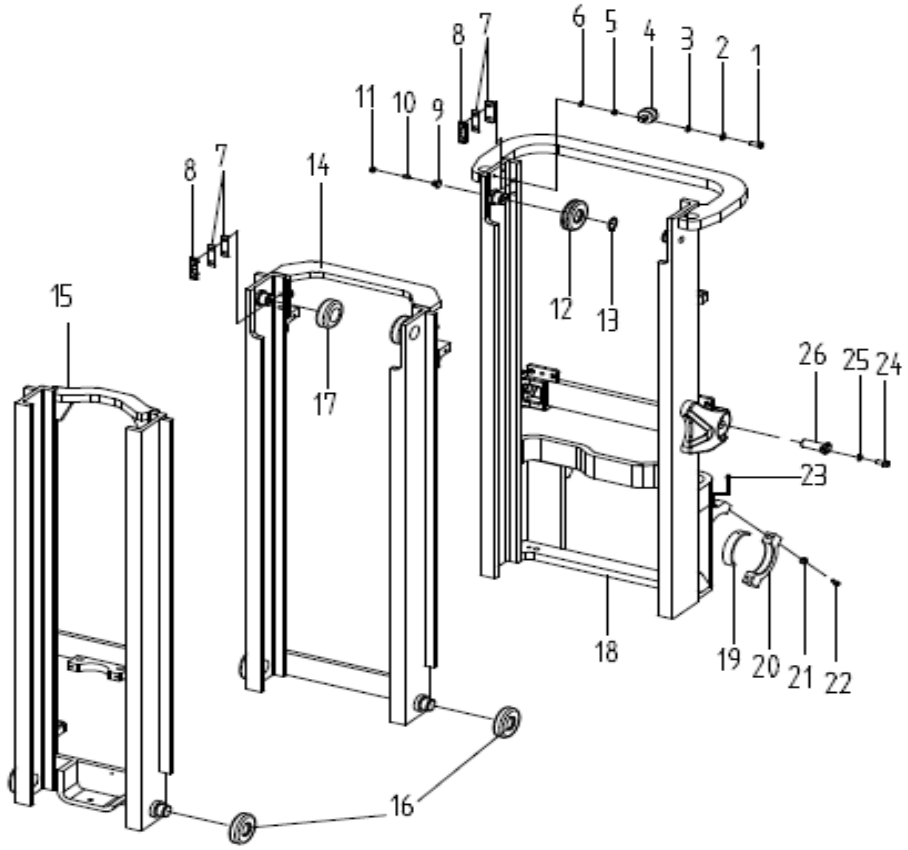

门架选用表 Mast Optional Parts

起升高度LIFTING HEIGHT	外门架总成 OUTER MAST				备注 REMARK
	ID No.	3.5t			
3600	69106564	J35384-02000-3.6M-Black			
4000	69106771	J35384-02000-4.0M-Black			标准
4350	69106685	J35384-02000-4.35M-Black			
4500	69106627	J35384-02000-4.5M-Black			
4800	69106629	J35384-02000-4.8M-Black			
5000	69106802	J35384-02000-5.0M-Black			
5400	69106777	J35384-02000-5.4M-Black			
5500	69106783	J35384-02000-5.5M-Black			
6000	69106830	J35384-02000-6.0M-Black			
6500	69106803	J35384-02000-6.5M-Black			

图82/Fig82.	门架(三级全自由)/MAST(FULL FREE 3-STAGE MAST)

FD20/25/30/35（T）、FG(L)20/25/30/35（T)

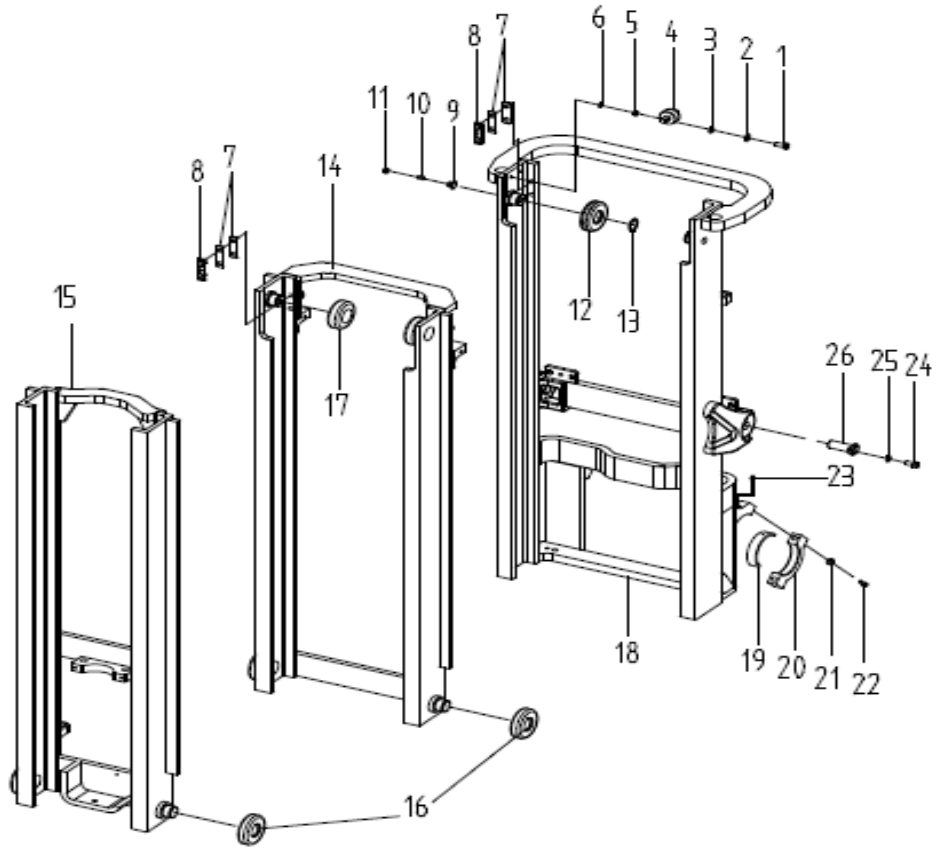

门架选用表 Mast Optional Parts

起升高度LIFTING HEIGHT	中门架总成 MIDDLE MAST				备注 REMARK
	ID No.	2-2.5t	ID No.	3t	
3600	69101176	A20484-04000-3.6M-Black	69101185	3000-3.	
4000	69101177	A20484-04000-4.0M-Black	69101186	3000-4.	
4350	69101178	20484-04000-4.35M-Blac	69101187	3000-4.3	
4500	69101179	A20484-04000-4.5M-Black	69101188	3000-4.	
4800	69101180	A20484-04000-4.8M-Black	69101189	3000-4.	
5000	69101181	A20484-04000-5.0M-Black	69101191	3000-5.	
5400	69101182	A20484-04000-5.4M-Black	69101192	3000-5.	
5500	69101183	A20484-04000-5.5M-Black	69101193	3000-5.	
6000	69101184	A20484-04000-6.0M-Black	69101194	3000-6.	
6500	69106274	A20484-04000-6.5M-Black	69106413	3000-6.	

图82/Fig82.	门架(三级全自由)/MAST(FULL FREE 3-STAGE MAST)

FD20/25/30/35（T）、FG(L)20/25/30/35（T）

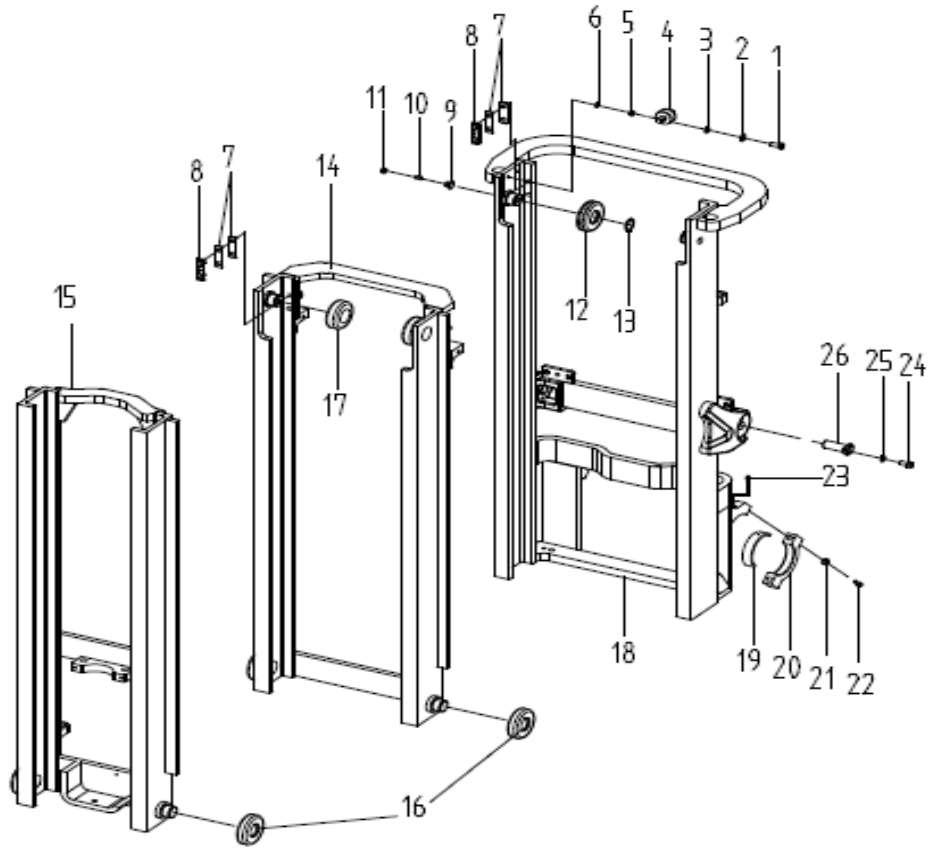

门架选用表 Mast Optional Parts

起升高度LIFTING HEIGHT	中门架总成 MIDDLE MAST				备注 REMARK
	ID No.	3.5t			
3600	69101195	A35484-03000-3.6M-Black			
4000	69101196	A35484-03000-4.0M-Black			
4350	69101198	35484-03000-4.35M-Black			
4500	69101199	A35484-03000-4.5M-Black			
4800	69101200	A35484-03000-4.8M-Black			
5000	69101201	A35484-03000-5.0M-Black			
5400	69101202	A35484-03000-5.4M-Black			
5500	69101203	A35484-03000-5.5M-Black			
6000	69101204	A35484-03000-6.0M-Black			
6500	69101205	A35484-03000-6.5M-Black			

图82/Fig82.	门架(三级全自由)/MAST(FULL FREE 3-STAGE MAST)

FD20/25/30/35（T）、FG(L)20/25/30/35（T)

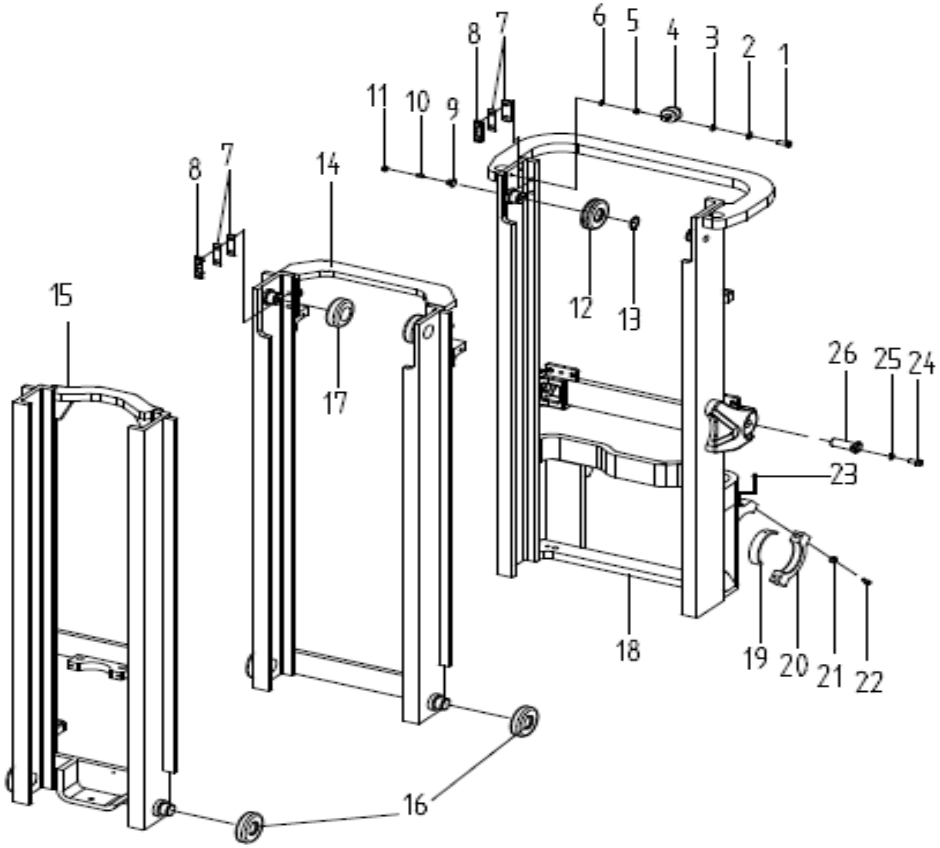

门架选用表 Mast Optional Parts

起升高度LIFTING HEIGHT	内门架总成 INNER MAST				备注 REMARK
	ID No.	2-2.5t	ID No.	3t	
3600	69101291	J20384-01000-3.6M-Blac	69101390	01000-3.	
4000	69101292	J20384-01000-4.0M-Blac	69101391	01000-4.	
4350	69101293	J20384-01000-4.35M-Blac	69101392	1000-4.	
4500	69101294	J20384-01000-4.5M-Blac	69101393	01000-4.	
4800	69101295	J20384-01000-4.8M-Blac	69101394	01000-4.	
5000	69101296	J20384-01000-5.0M-Blac	69101395	01000-5.	
5400	69101297	J20384-01000-5.4M-Blac	69101396	01000-5.	
5500	69101298	J20384-01000-5.5M-Blac	69101397	01000-5.	
6000	69101299	J20384-01000-6.0M-Blac	69101398	01000-6.	
6500	69106273	J20384-01000-6.5M-Blac	69106412	01000-6.	

图82/Fig82.	门架(三级全自由)/MAST(FULL FREE 3-STAGE MAST)

FD20/25/30/35（T）、FG(L)20/25/30/35（T）

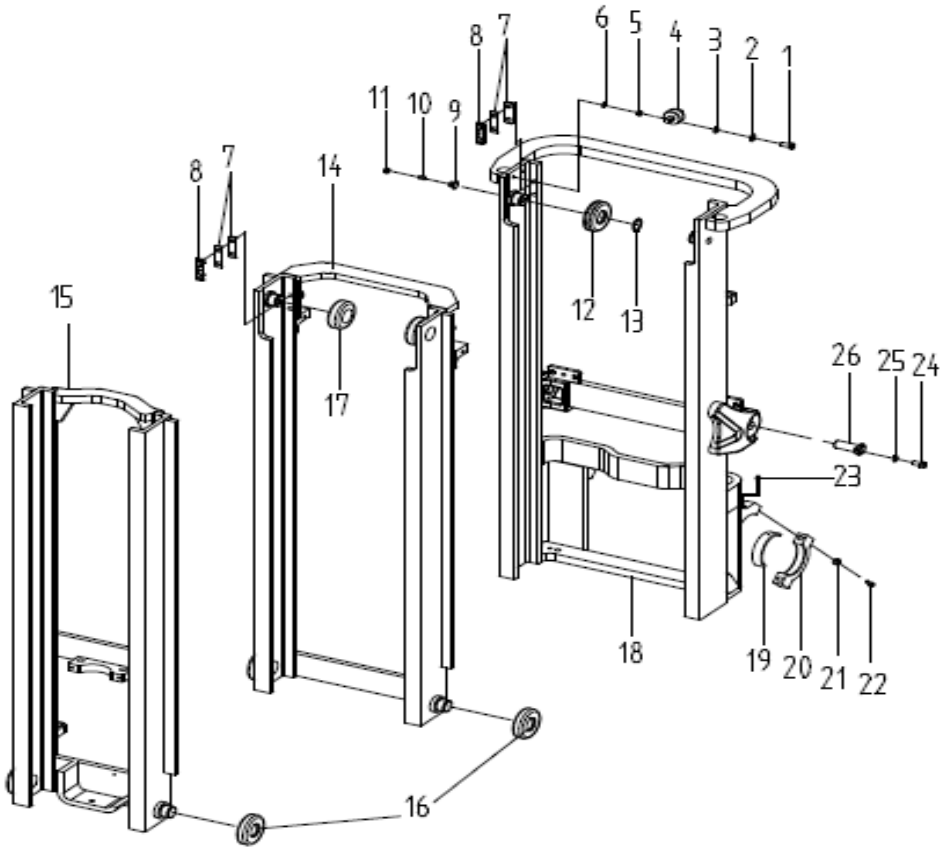

门架选用表 Mast Optional Parts

起升高度LIFTING HEIGHT	内门架总成 INNER MAST				备注 REMARK
	ID No.	3.5t			
3600	69101491	J35384-01000-3.6M-Black			
4000	69101492	J35384-01000-4.0M-Black			
4350	69101493	J35384-01000-4.35M-Black			
4500	69101494	J35384-01000-4.5M-Black			
4800	69101495	J35384-01000-4.8M-Black			
5000	69101496	J35384-01000-5.0M-Black			
5400	69101497	J35384-01000-5.4M-Black			
5500	69101498	J35384-01000-5.5M-Black			
6000	69101499	J35384-01000-6.0M-Black			
6500	69101501	J35384-01000-6.5M-Black			

图83/FIG83. 起升油缸(基本型)/LIFT CYLINDER(NORMAL MAST)

FD20/25/30/35（T）、FG(L)20/25/30/35（T）

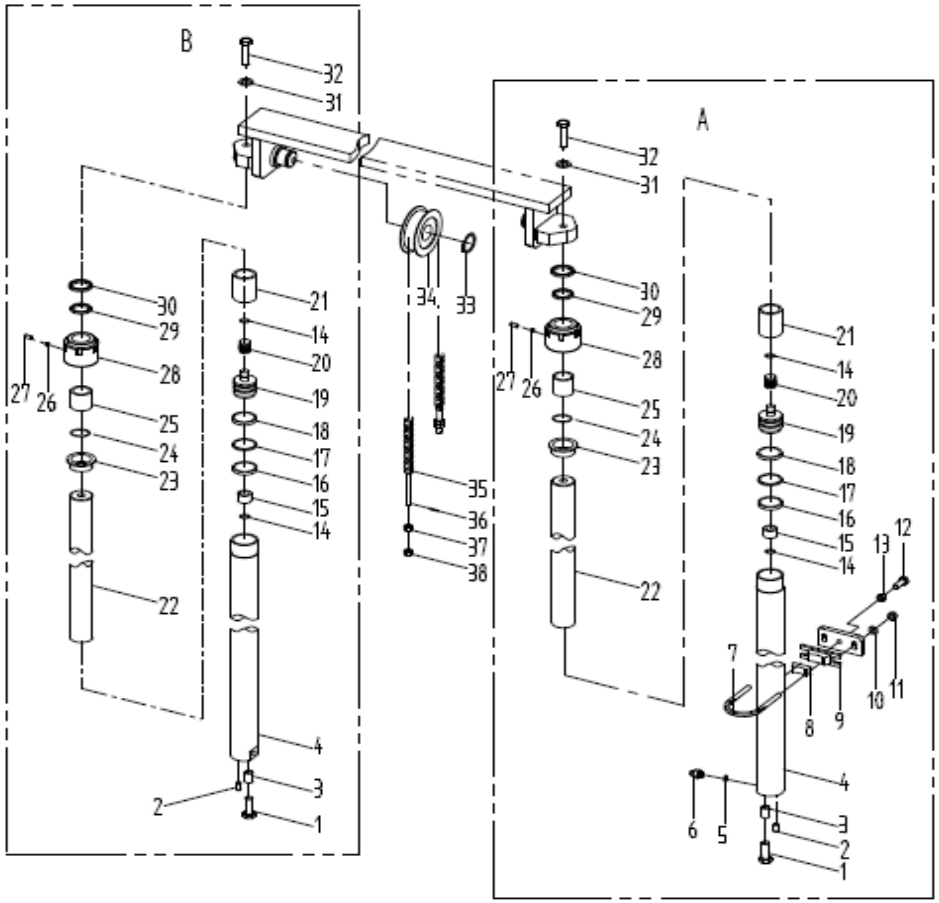

序号 Item No.	ID No.	代号 Part No.	名称 Description	数量 Q' ty	备注 Remark
A	N/A	A20480-05000B	Lift cylinder(right)	1	2-2.5t AS NEEDED
-	N/A	A30480-06000B	Lift cylinder(right)	1	3t AS NEEDED
-	N/A	A35484-04000B	Lift cylinder(right)	1	3.5t AS NEEDED
B	N/A	A20480-06000B	Lift cylinder(left)	1	2-2.5t AS NEEDED
-	N/A	A30480-07000B	Lift cylinder(left)	1	3t AS NEEDED
-	N/A	A35480-05000	Lift cylinder(left)	1	3.5t AS NEEDED
1	69000137	GB/T5786-M12*1.25*25-8.8I	Bolt M12×1.25×25	2	
2	69135381	A20480-05012	Cylindrical pin 10×25	2	
3	69000054	GB/T93-12	Washer 12	2	
4	N/A	Max202J01A-100	Cylinder body	2	2-2.5t NSS
-	N/A	Max302J01A-100	Cylinder body	2	3t NSS
-	N/A	Max352J01A-100	Cylinder body	2	3.5t NSS
5	69124131	GB1235-22*2.4-G	O-ring 22×2.4	1	2-3t
-	69124132	GB1235-30*3.5-G	O-ring 30×3.5	1	3.5t
6	69135383	A20480-05100	Safety valve	1	2-2.5t
-	69135455	A30480-06100	Safety valve	1	3t
-	69135512	A35480-04100	Safety valve	1	3.5t
7	69006791	M3038000007	Hoop	2	2-3t
-	69009408	M3538000001	Hoop	2	3.5t
8	69012173	M3038000008	Rubber pad	2	2-3t
-	69012173	M3038000008	Rubber pad	2	3.5t
9	69012171	M3038009000	Hoop seat	2	2-3t
-	69012170	M3538000002	Hoop seat	2	3.5t
10	69000250	GB/T97.1-10	Washer 10	4	
11	69000313	GB/T6171-M10*1.25-8J	Nut M10×1.25	4	

图83/FIG83. 起升油缸(基本型)/LIFT CYLINDER(NORMAL MAST)

FD20/25/30/35（T）、FG(L)20/25/30/35（T）

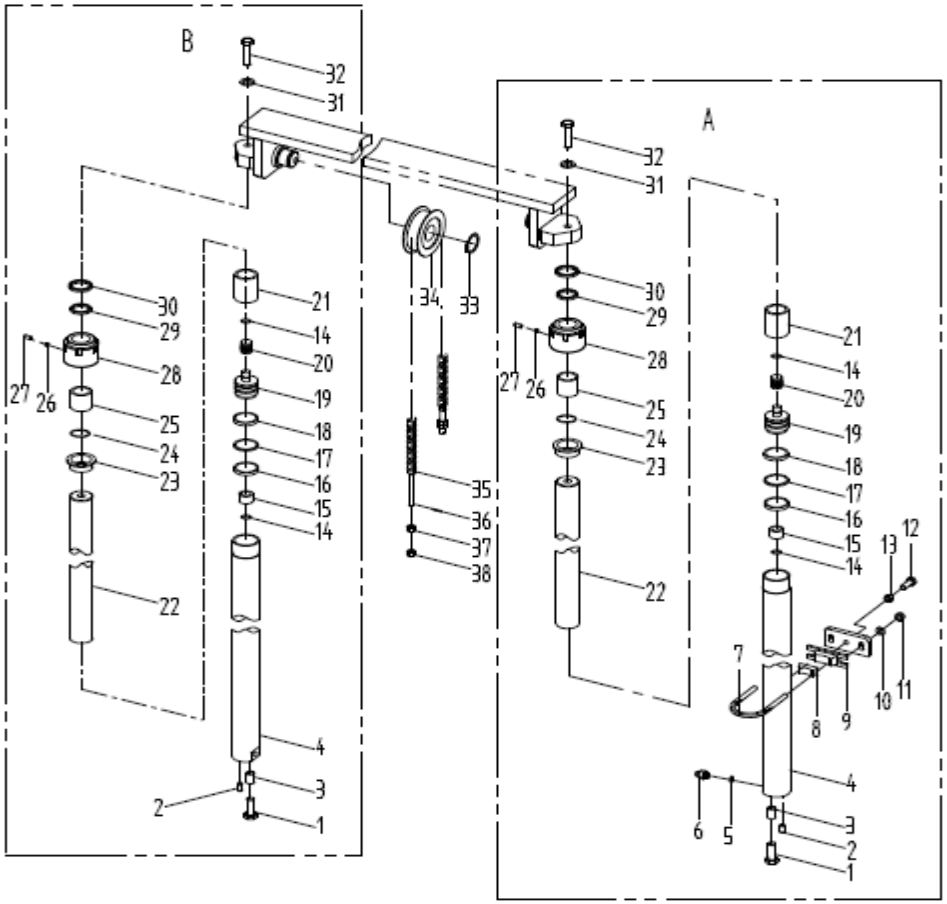

序号 Item No.	ID No.	代号 Part No.	名称 Description	数量 Q' ty	备注 Remark
12	69000140	GB/T5786-M12*1.25*45-8.8I	Bolt M12×1.25×45	2	
13	69000314	GB/T6171-M12*1.25-8J	Nut M12×1.25	2	
14	69130898	GB/T895.1-30	Steel wire snap ring 30	4	2-3t
-	69133213	M452J01-5	Steel wire snap ring 35	4	3.5t
15	69135447	A30480-06007	Sleeve	2	2-3t
-	69135502	A35480-04006	Sleeve	2	3.5t
16	69135377	A20480-05008	Orifice seal 50×40×6	2	2-2.5t
-	69135450	A30480-06010	Orifice seal 56×45×7	2	3t
-	69135507	A35480-04011	Orifice seal 63×53×6	2	3.5t
17	69135376	A20480-05007	Snap ring Φ50×Φ40×3	2	2-2.5t
-	69135449	A30480-06009	Snap ring Φ56×Φ45×3	2	3t
-	69135506	A35480-04010	Snap ring Φ63×Φ53×3	2	3.5t
18	69135375	A20480-05006	Orifice bearing ring D50×8×2.5	2	2-2.5t
-	69135448	A30480-06008	Orifice bearing ring D56×8×2.5	2	3t
-	69135505	A35480-04009	Orifice bearing ring D63×20×2.5	2	3.5t
19	69135374	A20480-05005	Piston	2	2-2.5t
-	69135445	A30480-06005	Piston	2	3t
-	69135504	A35480-04008	Piston	2	3.5t
20	69135384	A20480-05200	One-way valve	2	
21	69136811	TLC-20T11	Spacer Φ40×50	按需 On	2-2.5t
-	69136812	TLC-30T18	Spacer Φ45×50	按需 On	3t
-	69135503	A35480-04007	Spacer Φ50×50	按需 On	3.5t
22	N/A	Max202J01-1	Piston Rod	2	2-2.5t NSS
-	N/A	Max302J01-1	Piston Rod	2	3t AS NSS
-	N/A	Max352J01-1	Piston Rod	2	3.5t NSS

图83/FIG83. 起升油缸(基本型)/LIFT CYLINDER(NORMAL MAST)

FD20/25/30/35（T）、FG(L)20/25/30/35（T）

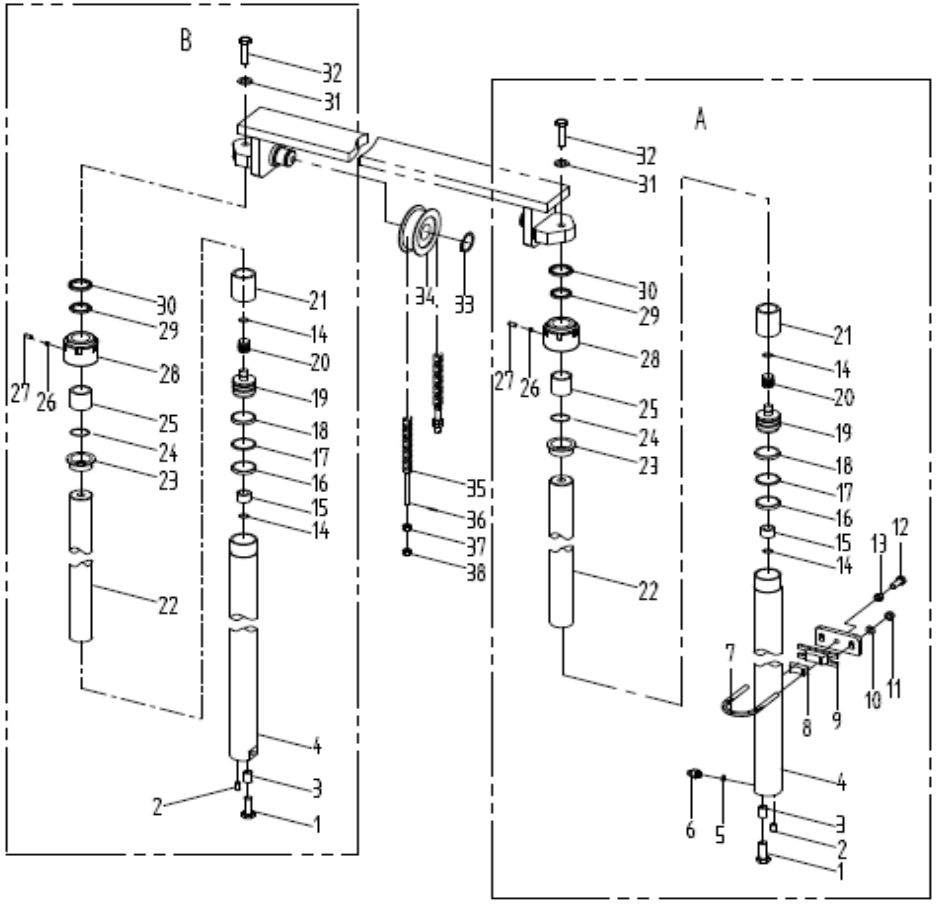

序号 Item No.	ID No.	代号 Part No.	名称 Description	数量 Q' ty	备注 Remark
23	69135373	A20480-05004	Bushing	2	2-2.5t
-	69135444	A30480-06004	Bushing	2	3t
-	69135500	A35480-04004	Bushing	2	3.5t
24	69024340	GB1235-60*3.1	O-ring 60×3.1	2	2-2.5t
-	69009541	LS9541	O-ring 68×3.1	2	3t
-	69018828	GB/T1235-75*3.1	O-ring 75×3.1	2	3.5t
25	69135380	A20480-05011	Bushing Bearing 40×44×30	2	2-2.5t
-	69135453	A30480-06013	Bushing Bearing 45×50×30	2	3t
-	69135510	A35480-04014	Bushing Bearing 50×55×40	2	3.5t
26	69135454	A30480-06014	Nylon pad Φ6×3	2	
27	69008637	GB/T77-M8*8-12.9J	Screw M8×8	2	2-3t
-	69094109	GB/T73-1985	Screw M8×6	2	3.5t
28	69135372	A20480-05003	Cylinder cap	2	2-2.5t
-	69135443	A30480-06003	Cylinder cap	2	3t
-	69135481	A35480-04001	Cylinder cap	2	3.5t
29	69135378	A20480-05009	Axial seal 40×50×7	2	2-2.5t
-	69135451	A30480-06011	Axial seal 45×55×7	2	3t
-	69135508	A35480-04012	Axial seal 50×60×7	2	3.5t
30	69135379	A20480-05010	Dust-proof seal ring 40×52×7/10	2	2-2.5t
-	69135452	A30480-06012	Dust-proof seal ring 45×57×7/10	2	3t
-	69135509	A35480-04013	Dust-proof seal ring 50×62×7/10	2	3.5t
31	69000053	GB/T93-10	Washer 16	2	
32	69020214	GB/T5786-M16*1.5*40-8.8I	Bolt M16×1.5×40	2	
33	69000070	GB/T894.1-Φ40	Snap ring 40	2	
34	69018464	M30074008000	Chain roller 780708H	2	2-3t

图83/FIG83.	起升油缸(基本型)/LIFT CYLINDER(NORMAL MAST)

FD20/25/30/35（T）、FG(L)20/25/30/35（T）

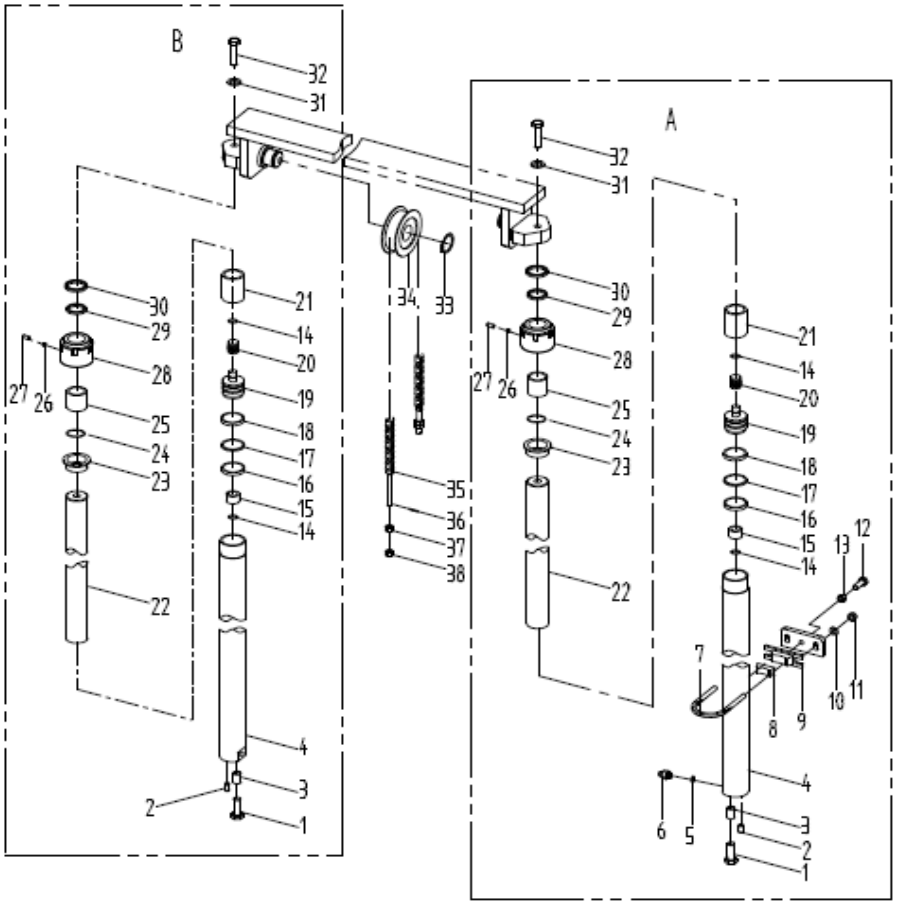

序号 Item No.	ID No.	代号 Part No.	名称 Description	数量 Q' ty	备注 Remark
-	69007748	M3538006000	Chain roller A60309	2	3.5t
35	N/A	M2038001000	Chain LH1234	2	2-2.5t AS NEEDED
-	N/A	M3038001000	Chain LH1623	2	3t AS NEEDED
-	N/A	M3538001000	Chain LH1634	2	3.5t AS NEEDED
36	69017915	GB/T91-3.2*40	Cotter pin 3.2×40	4	
37	69107732	M3038001001	Nut M18×1.5	4	2-3t
-	69012580	M3538001001	Nut M22×1.5	4	3.5t
38	69000004	GB/T6171-M18*1.5-8J	Nut M18×1.5	4	2-3t
-	69136816	GB/T6171-2000-M22*1.5	Nut M22×1.5	4	3.5t

图83/FIG83.	起升油缸(基本型)/LIFT CYLINDER(NORMAL MAST)

FD20/25/30/35（T）、FG(L)20/25/30/35（T）

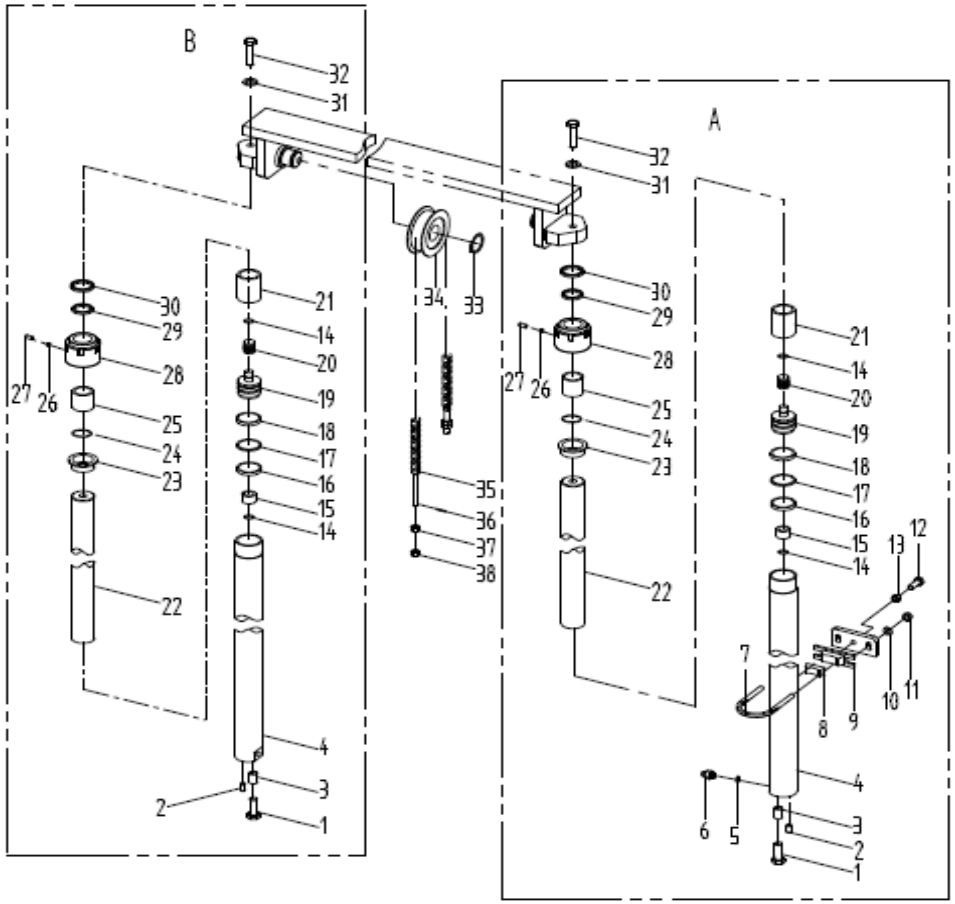

2-2.5t起升油缸选用件(基本型)
LIFT CYLINDER OPTION TABLE(NORMAL MAST)

起升高度 LIFTING HEIGHT	ID No.	左起升油缸 Lift cylinder L.H.	ID No.	右起升油缸 Lift	备注 REMARKS
3000	69103221	A20480-06000-3.0M	69039626	30-05000	标准
3300	69103222	A20480-06000-3.3M	69039627	30-05000	
3500	69103223	A20480-06000-3.5M	69039628	30-05000	
3700	69103275	A20480-06000-3.7M	69042275	30-05000	
4000	69103224	A20480-06000-4.0M	69039629	30-05000	
4500	69103226	A20480-06000-4.5M	69039631	30-05000	
5000	69103227	A20480-06000-5.0M	69039632	30-05000	
5500	69103228	A20480-06000-5.5M	69039633	30-05000	
6000	69103230	A20480-06000-6.0M	69039634	30-05000	

图83/FIG83.	起升油缸(基本型)/LIFT CYLINDER(NORMAL MAST)

FD20/25/30/35（T）、FG(L)20/25/30/35（T）

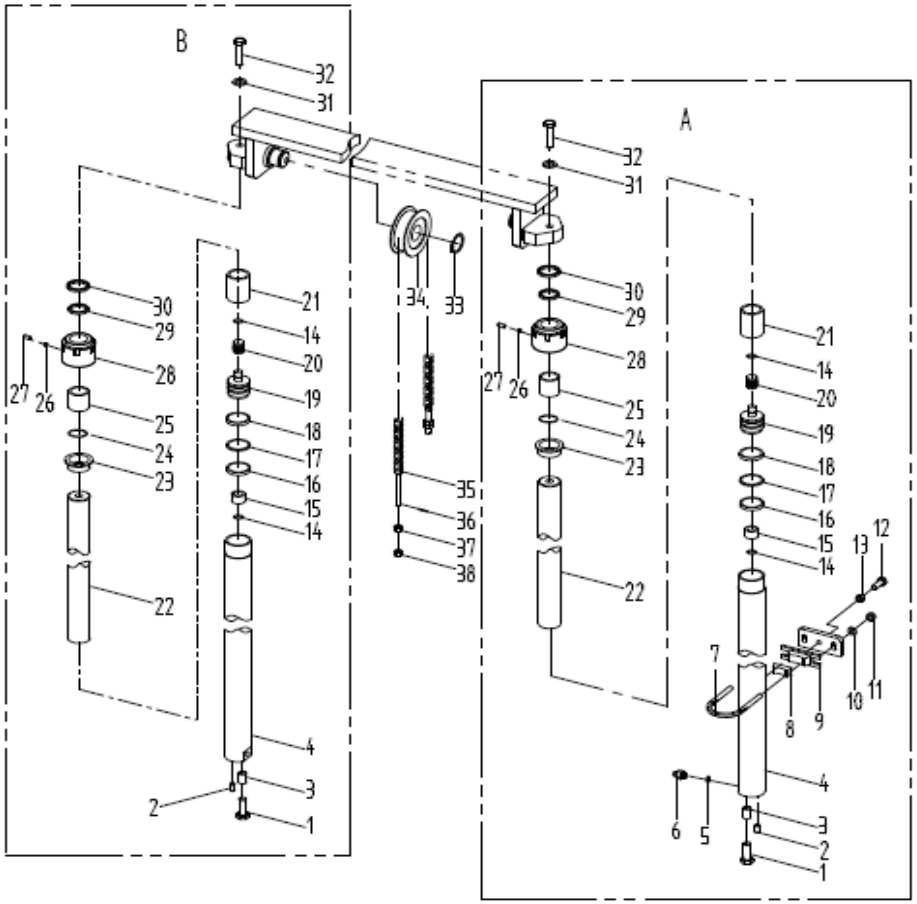

2-2.5t起升油缸选用件(基本型)
LIFT CYLINDER OPTION TABLE(NORMAL MAST)

起升高度 LIFTING HEIGHT	ID No.	链条总成 Chain Ass'y		备注 REMARKS
3000	69110534	M2038001000-3.0		标准
3300	69109706	M2038001000-3.3		
3500	69109708	M2038001000-3.5		
3700	69109710	M2038001000-3.7		
4000	69109714	M2038001000-4.0		
4500	69109722	M2038001000-4.5		
5000	69109726	M2038001000-5.0		
5500	69109728	M2038001000-5.5		
6000	69109730	M2038001000-6.0		

图83/FIG83.	起升油缸(基本型)/LIFT CYLINDER(NORMAL MAST)

FD20/25/30/35（T）、FG(L)20/25/30/35（T)

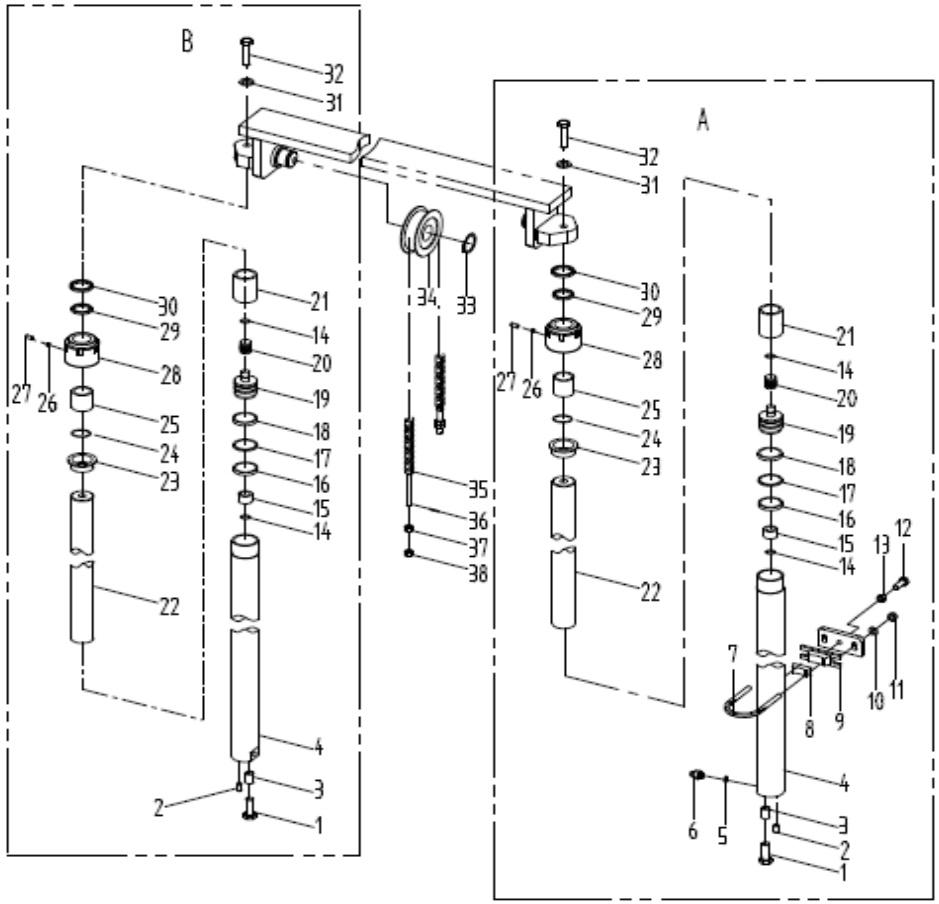

3t起升油缸选用件(基本型)
LIFT CYLINDER OPTION TABLE(NORMAL MAST)

LENGTH	ID No.	左起升油缸 Lift cylinder L.H.	ID No.	备注 REMARKS
3000	69103020	A30480-07000-3.0M	69034154	标准
3300	69103219	A30480-07000-3.3M	69039268	
3500	69103212	A30480-07000-3.5M	69036347	
3700	69103272	A30480-07000-3.7M	69042272	
4000	69103214	A30480-07000-4.0M	69036348	
4500	69103215	A30480-07000-4.5M	69036350	
5000	69103216	A30480-07000-5.0M	69036351	
5500	69103218	A30480-07000-5.5M	69036353	
6000	69103217	A30480-07000-6.0M	69036352	

图83/FIG83.	起升油缸(基本型)/LIFT CYLINDER(NORMAL MAST)

FD20/25/30/35（T）、FG(L)20/25/30/35（T)

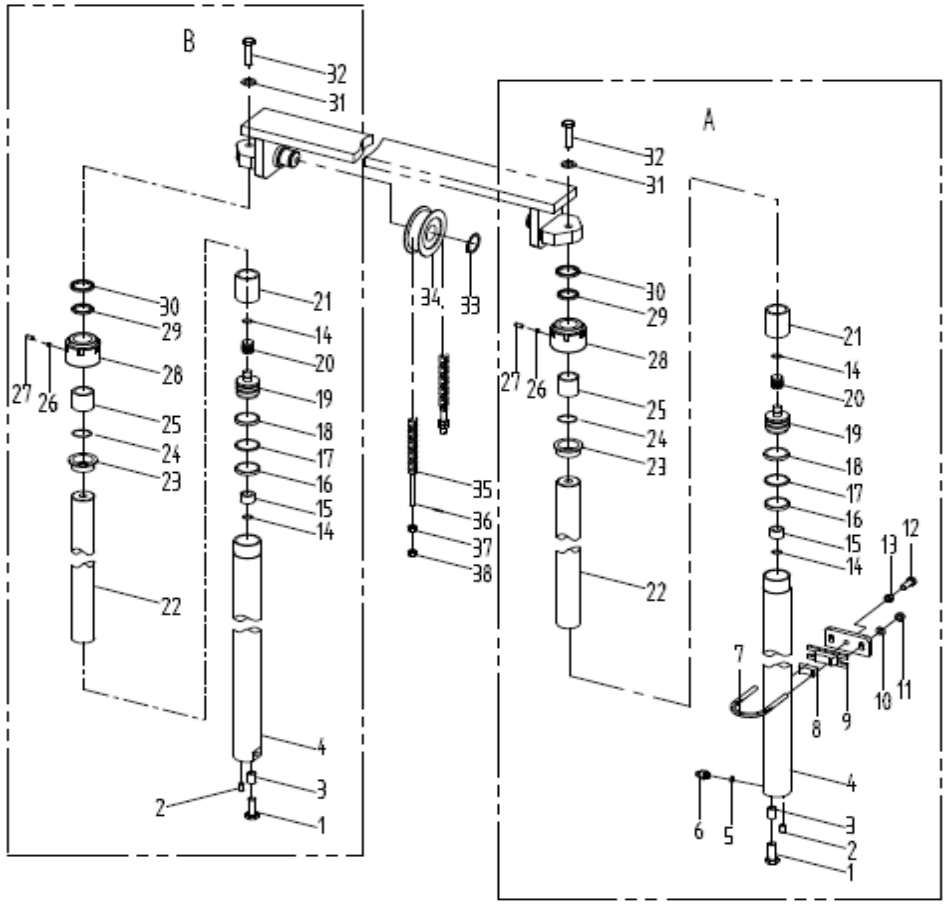

3t起升油缸选用件(基本型)
LIFT CYLINDER OPTION TABLE(NORMAL MAST)

LENGTH	ID No.	链条总成 Chain Ass'y		备注 REMARKS
3000	69110147	M3038001000-3.0		标准
3300	69110149	M3038001000-3.3		
3500	69110151	M3038001000-3.5		
3700	69110155	M3038001000-3.7		
4000	69110157	M3038001000-4.0		
4500	69110164	M3038001000-4.5		
5000	69110168	M3038001000-5.0		
5500	69110170	M3038001000-5.5		
6000	69110172	M3038001000-6.0		

图83/FIG83.	起升油缸(基本型)/LIFT CYLINDER(NORMAL MAST)

FD20/25/30/35（T）、FG(L)20/25/30/35（T）

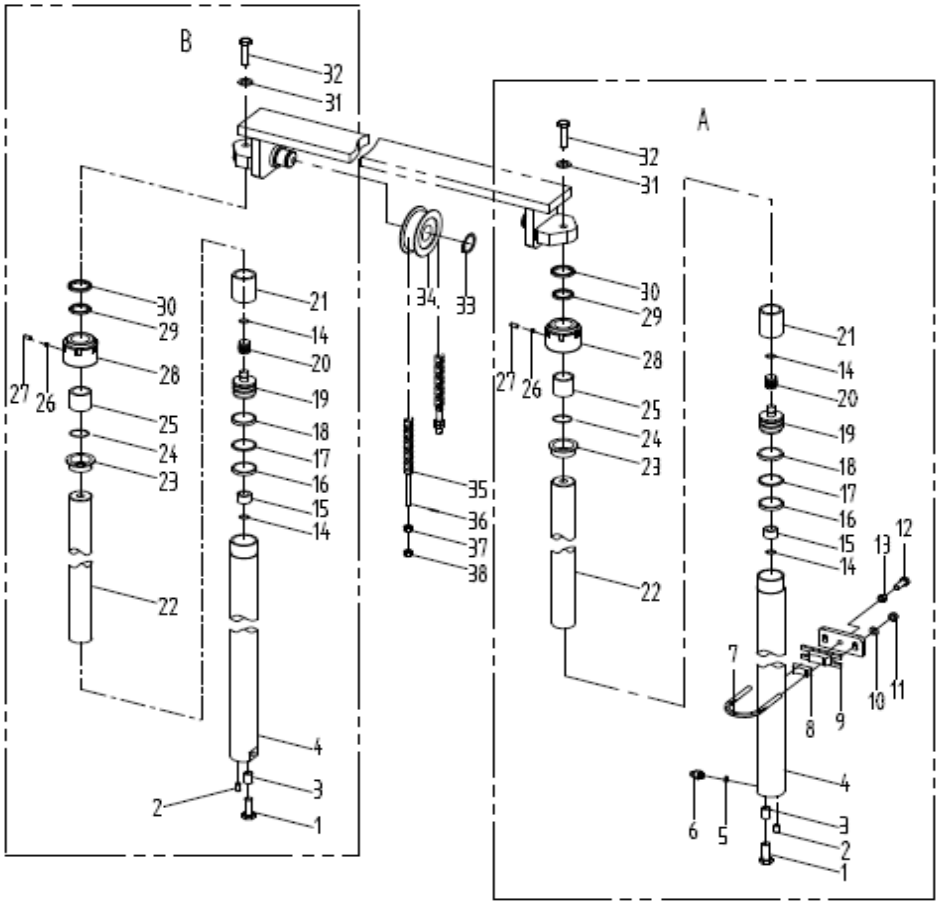

3.5t起升油缸选用件(基本型)
LIFT CYLINDER OPTION TABLE(NORMAL MAST)

起升高度 LIFTING HEIGHT	ID No.	左起升油缸 Lift cylinder L.H.	ID No.	备注 REMARKS
3000	69103316	A35480-05000-3.0M	69043041	标准
3300	69103318	A35480-05000-3.3M	69043042	
3500	69103319	A35480-05000-3.5M	69043043	
3700	69103323	A35480-05000-3.7M	69043045	
4000	69103326	A35480-05000-4.0M	69043046	
4500	69103328	A35480-05000-4.5M	69043047	
5000	69103331	A35480-05000-5.0M	69043050	
5500	69103332	A35480-05000-5.5M	69043051	
6000	69103333	A35480-05000-6.0M	69043052	

图83/FIG83.	起升油缸(基本型)/LIFT CYLINDER(NORMAL MAST)

FD20/25/30/35（T）、FG(L)20/25/30/35（T）

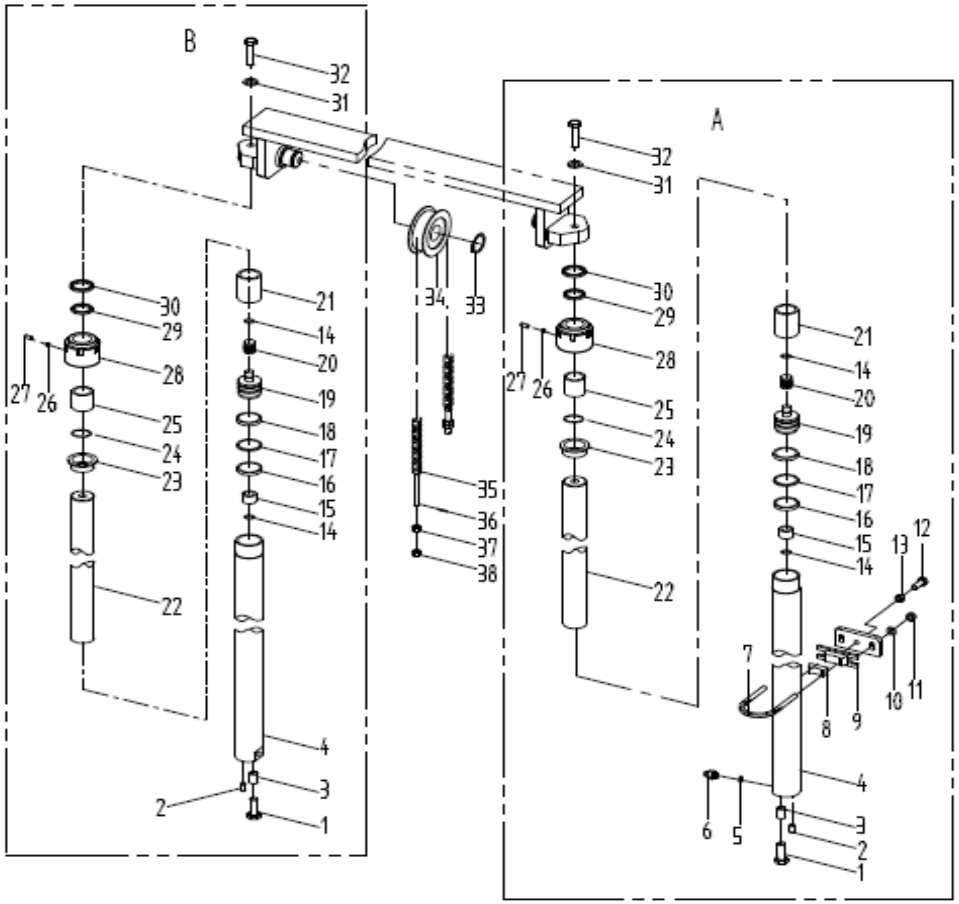

3.5t起升油缸选用件(基本型)
LIFT CYLINDER OPTION TABLE(NORMAL MAST)

起升高度 LIFTING HEIGHT	ID No.	链条总成 Chain Ass'y		备注 REMARKS
3000	69110393	M3538001000-3.0		标准
3300	69110395	M3538001000-3.3		
3500	69110401	M3538001000-3.5		
3700	69110403	M3538001000-3.7		
4000	69110404	M3538001000-4.0		
4500	69110406	M3538001000-4.5		
5000	69110408	M3538001000-5.0		
5500	69110409	M3538001000-5.5		
6000	69110410	M3538001000-6.0		

图84/FIG84.	前起升油缸(二级全自由)/FRONT LIFT CYLINDER(FULL FREE 2-STAGE MAST)

FD20/25/30/35（T）、FG(L)20/25/30/35（T）

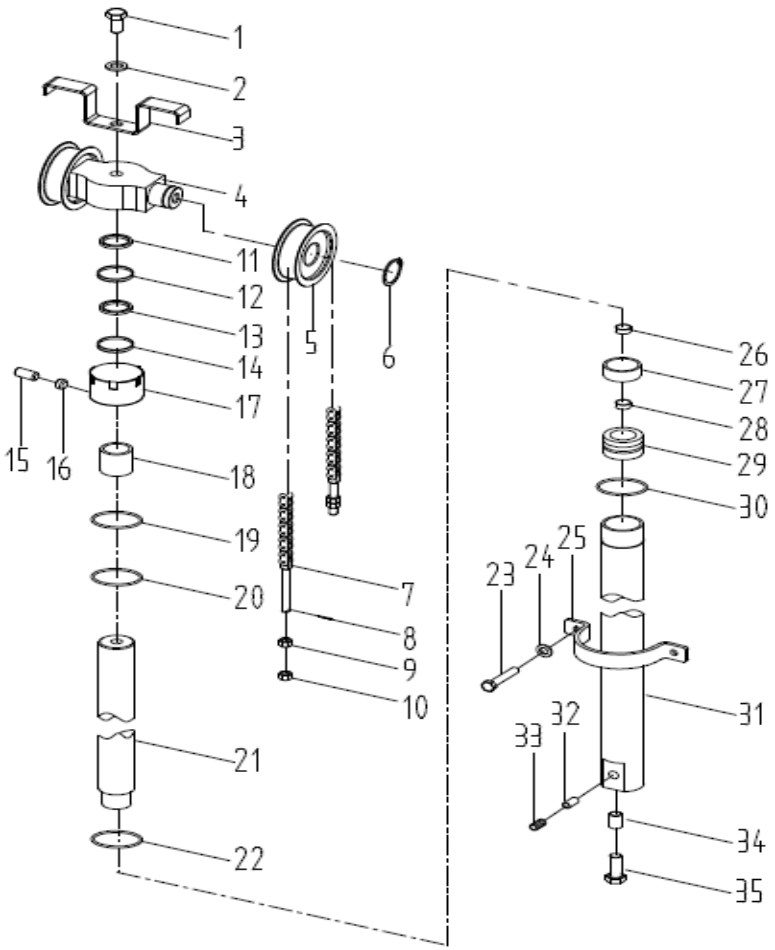

序号 Item No.	ID No.	代号 Part No.	名称 Description	数量 Q' ty	备注 Remark
A	N/A	MJ20382-03000	Front lift cylinder	1	2-2.5t
-	N/A	MJ30382-03000	Front lift cylinder	1	3t
-	N/A	MJ35382-03000	Front lift cylinder	1	3.5t
1	69000175	GB/T5782-M16*75-8.8J	Bolt M16×1.5×75	1	
2	69000056	GB/T93-16	Washer 16	1	
3	69106552	M30074000003-Black	Chain protector	1	2-3t
-	69106434	M35043000003-Black	Chain protector	1	3.5t
4	69087535	MJ30384-00002	Cylinder head	1	2-3t
-	69106432	MJ35382-00001-Black	Cylinder head	1	3.5t
5	69018464	M30074008000	Chain roller 780708H	2	2-3t
-	69007748	M3538006000	Chain roller A60309	2	3.5t
6	69000070	GB/T894.1-Φ40	Axial Circlip 40	2	
7	N/A	M20043001000	Chain ass'y LH1234	2	2-2.5t AS NEEDED
-	N/A	M30043001000	Chain ass'y LH1623	2	3t AS NEEDED
-	N/A	M35043001000	Chain ass'y LH1634	2	3.5t AS NEEDED
8	69017915	GB/T91-3.2*40	Cotter pin 3.2×40	4	
9	69107732	M3038001001	Nut M18×1.5	4	2-3t
-	69012580	M3538001001	Nut M22×1.5	4	3.5t
10	69000004	GB/T6171-M18*1.5-8J	Nut M18×1.5	4	2-3t
-	69136816	GB/T6171-2000-M22*1.5	Nut M22×1.5	4	3.5t
11	69135666	MJ20384-03010	Dust-proof seal 60×74×8/11	1	2-2.5t
-	69135711	MJ30384-03010	Dust-proof seal 70×84×8/11	1	3t
-	69135739	MJ35382-03009	Dust-proof seal 75×89×8/11	1	3,5
12	69135662	MJ20384-03006	Snap ring d70×Φ60×3	1	2-2.5t
-	69135707	MJ30384-03006	Snap ring d80×Φ70×3	1	3t

图84/FIG84. 前起升油缸(二级全自由)/FRONT LIFT CYLINDER(FULL FREE 2-STAGE MAST)

FD20/25/30/35（T）、FG(L)20/25/30/35（T）

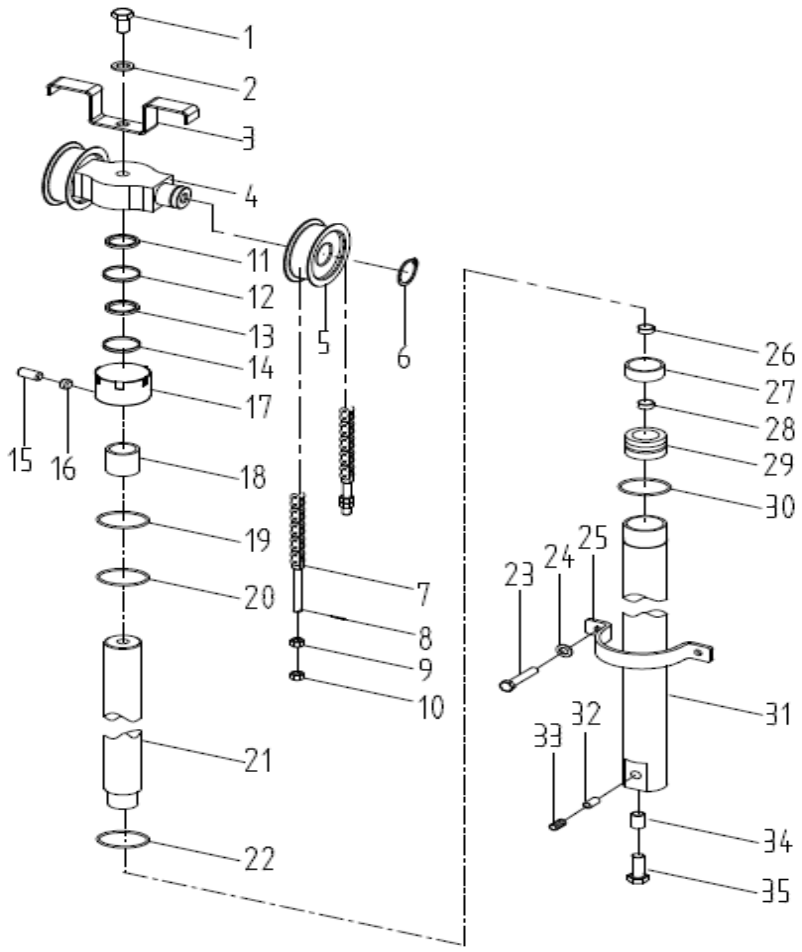

序号 Item No.	ID No.	代号 Part No.	名称 Description	数量 Q' ty	备注 Remark
-	69135708	MJ30384-03007	Snap ring d85×φ75×3	1	3.5t
13	69135664	MJ20384-03008	Axial seal 60×70×6	1	2-2.5t
-	69135709	MJ30384-03008	Axial seal 70×80×6	1	3t
-	69135737	MJ35382-03007	Axial seal 75×85×6	1	3.5t
14	69018609	LS18609	O-ring 80×3.1	1	2-2.5t
-	69009551	GB/T1235-90*3.1	O-ring 90×3.1	1	3t
-	69136817	GB1235-76-100*3.1	O-ring 100×3.1	1	3.5t
15	69094106	GB/T80-M6*5	Stop bolt M6×5	1	
16	69040793	JB982-6	Compound gasket 6	1	
17	69135659	MJ20384-03003	Guiding sleeve	1	2-2.5t
-	69135704	MJ30384-03003	Guiding sleeve	1	3t
-	69135733	MJ35382-03003	Guiding sleeve	1	3.5t
18	69135667	MJ20384-03011	Bushing bearing 60×65×45	1	2-2.5t
-	69135712	MJ30384-03011	Bushing bearing 70×75×45	1	3t
-	69135740	MJ35382-03010	Bushing bearing 75×80×45	1	3.5t
19	69135663	MJ20384-03007	Snap ring d75×Φ65×3	1	2-2.5t
-	69135708	MJ30384-03007	Snap ring d85×Φ75×3	1	3t
-	69135736	MJ35382-03006	Snap ring d95×Φ80×3	1	3.5t
20	69018828	GB/T1235-75*3.1	O-ring 75×3.1	1	2-2.5t
-	69023228	LS23228	O-ring 85×3.1	1	3t
-	69016275	GB/T1235-95*3.1	O-ring 95×3.1	1	3.5t
21	N/A	Max202J05B-1	Piston Rod	1	2-2.5t NNS
-	N/A	Max302J05B-1	Piston Rod	1	3t NNS
-	N/A	Max352J05B-1	Piston Rod	1	3.5t NNS
22	69135661	MJ20384-03005	Orifice bearing ring D75×20×2.5	2	2-2.5t

图84/FIG84.	前起升油缸(二级全自由)/FRONT LIFT CYLINDER(FULL FREE 2-STAGE MAST)

FD20/25/30/35（T）、FG(L)20/25/30/35（T)

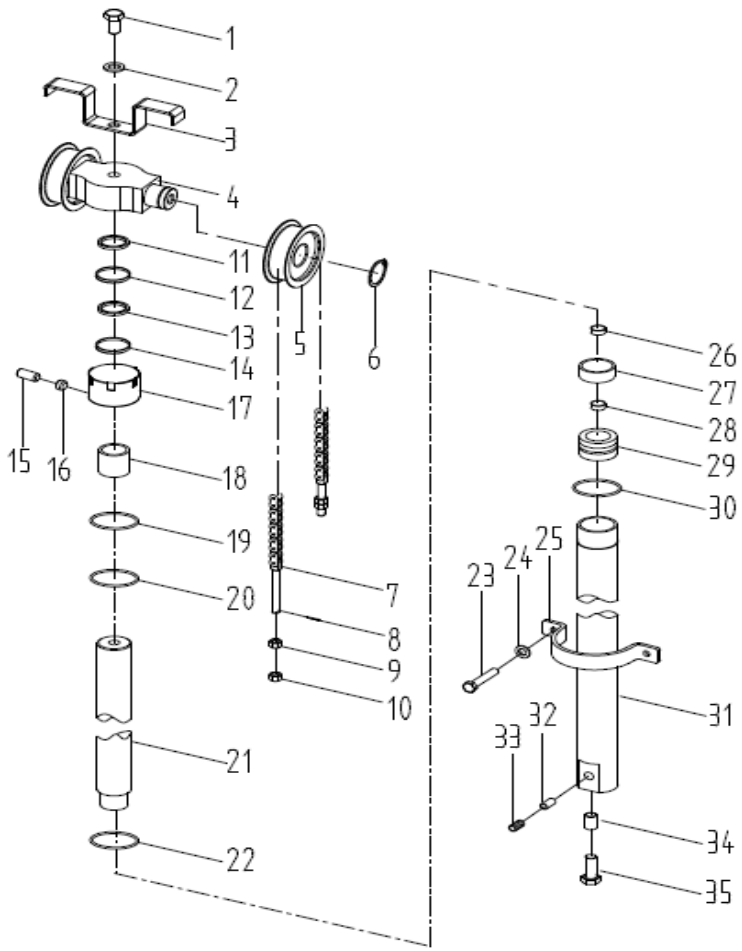

序号 Item No.	ID No.	代号 Part No.	名称 Description	数量 Q' ty	备注 Remark
-	69135706	MJ30384-03005	Orifice bearing ring D85×20×2.5	2	3t
-	69135735	MJ35382-03005	Orifice bearing ring D95×20×2.5	2	3.5t
23	69011769	GB/T5785-M10*1.25*20-8.8I	Bolt M10×1.25×20	2	
24	69000053	GB/T93-10	Washer 10	2	
25	69112410	MJ20384-00001-Black	Hold hoop	1	2-2.5t
-	69106554	MJ30384-00001-Black	Hold hoop	1	3t
-	69106433	MJ35382-00002-Black	Hold hoop	1	3.5t
26	69135669	MJ20384-03013	Steel wire snap ring d40	1	
27	69135714	MJ30384-03200	One-way valve	1	
28	69084487	GB/T893.1-Φ22	Orifice circlip 22	1	
29	69135660	MJ20384-03004	Piston	1	2-2.5t
-	69135705	MJ30384-03004	Piston	1	3t
-	69135734	MJ35382-03004	Piston	1	3.5t
30	69135665	MJ20384-03009	Orifice seal 75×65×6	2	2-2.5t
-	69135710	MJ30384-03009	Orifice seal 85×75×6	2	3t
-	69135738	MJ35382-03008	Orifice seal 95×80×9	2	3.5t
31	N/A	Max202J05B-100	Cylinder body	1	2-2.5t NNS
-	N/A	Max302J05B-100	Cylinder body	1	3t NNS
-	N/A	Max352J05B-100	Cylinder body	1	3.5t NNS
32	69124144	GB/T3452.1-19*2.65-G	O-ring 19×2.65	1	
33	69136236	TLC-15T12	Slide valve	1	2-3t
-	69135713	MJ30384-03100	Slide valve	1	3.5t
34	69000138	GB/T5786-M12*1.25*35-8.8I	Washer M12×1.25×25	2	
35	69000054	GB/T93-12	Bolt M12×1.25×25	2	

图84/FIG84.	前起升油缸(二级全自由)/FRONT LIFT CYLINDER(FULL FREE 2-STAGE MAST)

FD20/25/30/35（T）、FG(L)20/25/30/35（T）

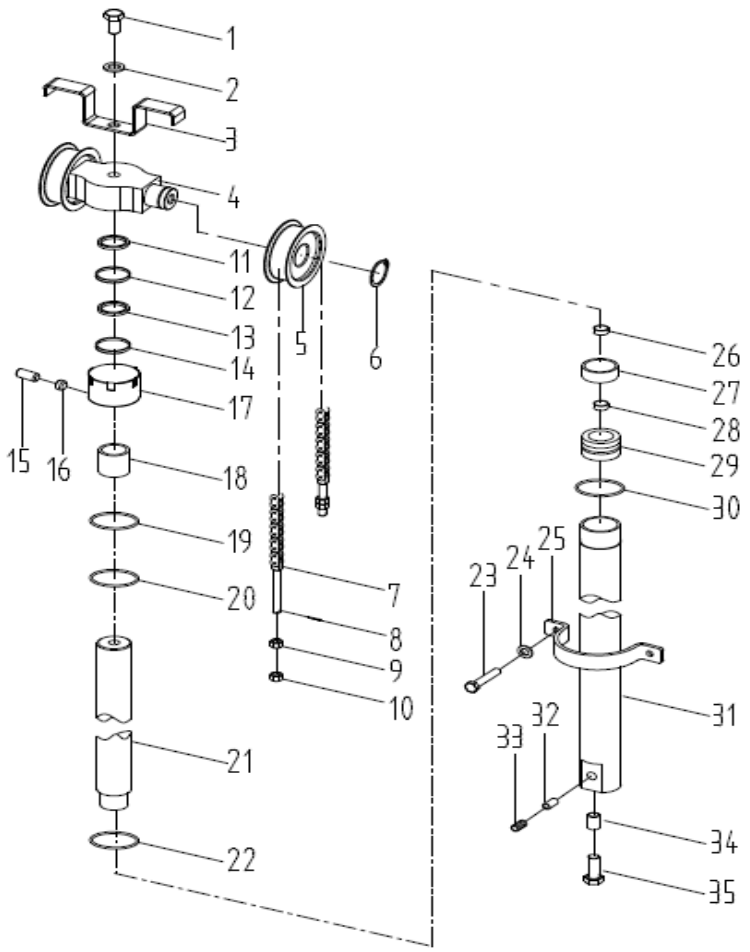

2-3.5t前起升缸选用件(二级全自由)
OPTIONAL PARTS 2-3.5 TON FRONT LIFT CYLINDER (FULL FREE 2-STAGE MAST)

起升高度LIFTING HEIGHT	ID No.	2-2.5t前起升油缸 Front Lift cylinder	ID No.	2.5t 链条总成 Chain	备注 REMARKS
3000	69084011	MJ20382-03000-3.0M	69109732	43001000	
3300	69084012	MJ20382-03000-3.3M	69109738	43001000	
3500	69084013	MJ20382-03000-3.5M	69109742	43001000	
3700	69084014	MJ20382-03000-3.7M	69109744	43001000	
4000	69084015	MJ20382-03000-4.0M	69109746	43001000	
4500	69084016	MJ20382-03000-4.5M	69109750	43001000	
5000	69084017	MJ20382-03000-5.0M	69109752	43001000	
5500	69084018	MJ20382-03000-5.5M	69109754	43001000	
6000	69084019	MJ20382-03000-6.0M	69109756	43001000	

图84/FIG84.	前起升油缸(二级全自由)/FRONT LIFT CYLINDER(FULL FREE 2-STAGE MAST)

FD20/25/30/35（T）、FG(L)20/25/30/35（T）

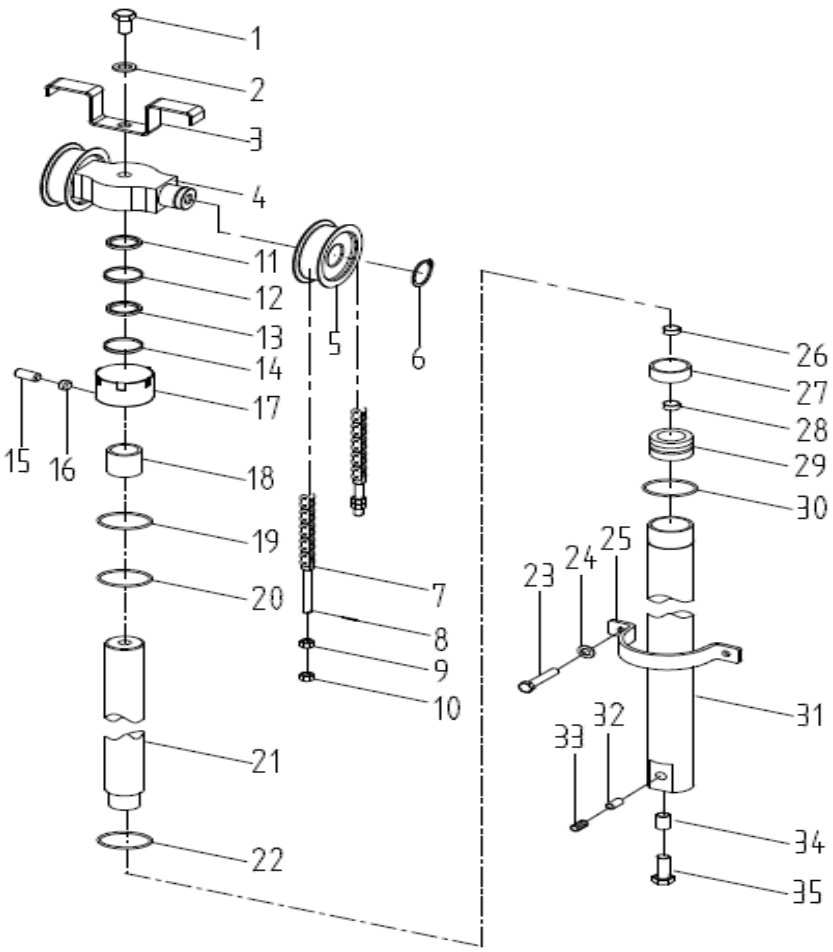

2-3.5t前起升缸选用件(二级全自由)
OPTIONAL PARTS 2-3.5 TON FRONT LIFT CYLINDER (FULL FREE 2-STAGE MAST)

起升高度L IFTING HEIGHT	ID No.	3.0T前起升缸 Lift cylinder	ID No.	3.0t 链条总成 Chain	备注 REMARKS
3000	69083920	MJ30382-03000-3.0M	69110175	43001000	
3300	69083921	MJ30382-03000-3.3M	69110176	43001000	
3500	69083922	MJ30382-03000-3.5M	69110178	43001000	
3700	69083923	MJ30382-03000-3.7M	69110180	43001000	
4000	69083924	MJ30382-03000-4.0M	69110183	43001000	
4500	69083925	MJ30382-03000-4.5M	69110184	43001000	
5000	69083926	MJ30382-03000-5.0M	69110186	43001000	
5500	69083927	MJ30382-03000-5.5M	69110188	43001000	
6000	69083928	MJ30382-03000-6.0M	69110190	43001000	

图84/FIG84.	前起升油缸(二级全自由)/FRONT LIFT CYLINDER(FULL FREE 2-STAGE MAST)

FD20/25/30/35（T）、FG(L)20/25/30/35（T）

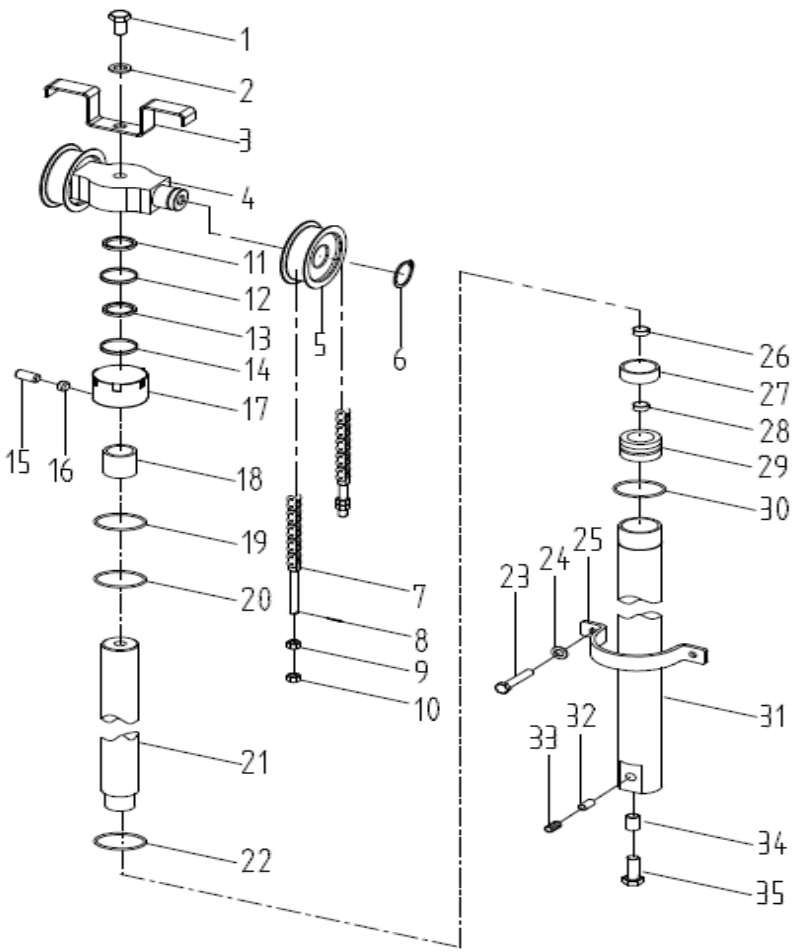

2-3.5t链条总成选用件(二级全自由)
OPTIONAL PARTS 2-3.5 TON CHAIN ASS'Y(FULL FREE 2-STAGE MAST)

起升高度LIFTING HEIGHT	ID No.	3.5T前起升缸 Lift cylinder	ID No.	3.5t 链条总成 Chain	备注 REMARKS
3000	69083950	MJ35382-03000-3.0M	69110536	43001000	
3300	69083951	MJ35382-03000-3.3M	69110537	43001000	
3500	69083952	MJ35382-03000-3.5M	69110538	43001000	
3700	69083953	MJ35382-03000-3.7M	69110539	43001000	
4000	69083954	MJ35382-03000-4.0M	69110540	43001000	
4500	69083955	MJ35382-03000-4.5M	69110541	43001000	
5000	69083956	MJ35382-03000-5.0M	69110542	43001000	
5500	69083957	MJ35382-03000-5.5M	69110543	43001000	
6000	69083958	MJ35382-03000-6.0M	69110544	43001000	

图85/FIG85. 后起升油缸(二级全自由)/REAR LIFT CYLINDER(FULL FREE 2-STAGE MAST)

FD20/25/30/35（T）、FG(L)20/25/30/35（T)

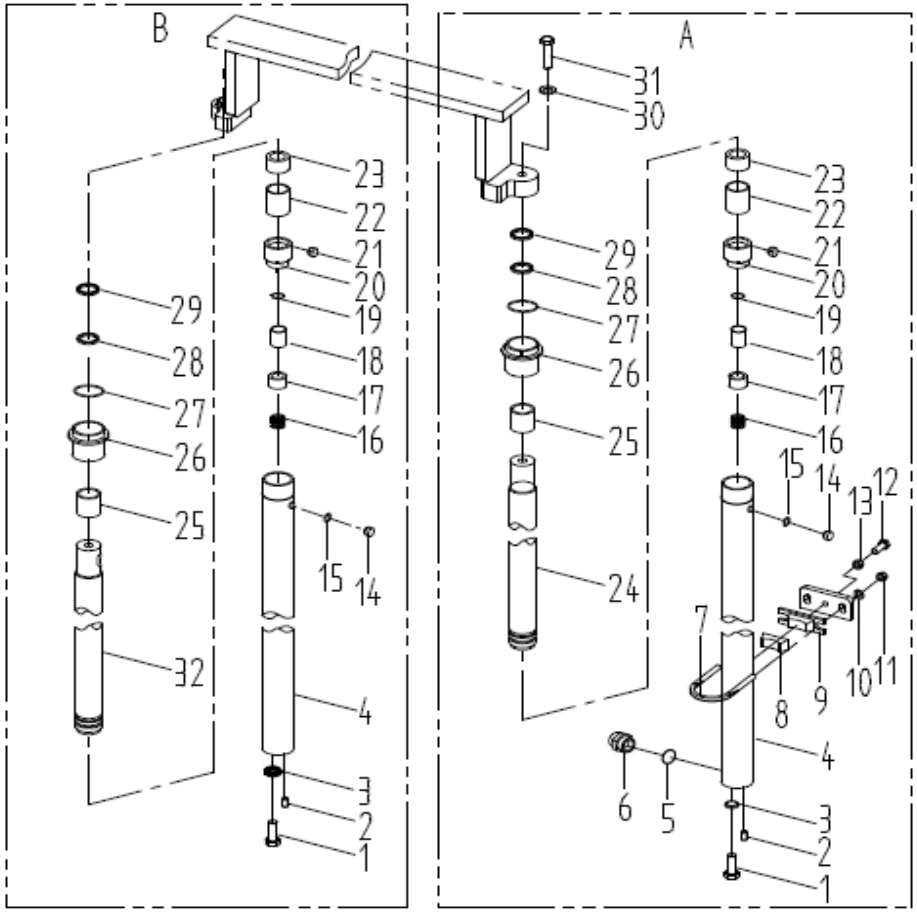

序号 Item No.	ID No.	代号 Part No.	名称 Description	数量 Q' ty	备注 Remark
A	N/A	M20043005000	Lift cylinder (right)	1	2-2.5t
-	N/A	M30043006000	Lift cylinder (right)	1	3t
-	N/A	M35043005000	Lift cylinder (right)	1	3.5t
B	N/A	M20043006000	Lift cylinder (left)	1	2-2.5t
-	N/A	M30043005000	Lift cylinder (left)	1	3t
-	N/A	M35043006000	Lift cylinder (left)	1	3.5t
1	69000137	GB/T5786-M12*1.25*25-8.8I	Bolt M12×1.25×25	2	
2	69135381	A20480-05012	Cylindrical pin B10×25	2	
3	69000054	GB/T93-12	Washer 12	2	
4	N/A	Max202J03-100	Cylinder body	2	2-2.5t NNS
-	N/A	Max302J03-100	Cylinder body	2	3t NNS
-	N/A	Max352J03-100	Cylinder body	2	3.5t NNS
5	69017923	GB/T1235-22*2.4	O-ring 22×2.4	1	
6	69135383	A20480-05100	Safety valve	1	2-3t
-	69135455	A30480-06100	Safety valve	1	3.5t
7	69006791	M3038000007	Hoop	2	
8	69012173	M3038000008	Rubber sleeve	2	
9	69012171	M3038009000	Hoop seat	2	
10	69000250	GB/T97.1-10	Washer 10	4	
11	69000313	GB/T6171-M10*1.25-8J	Nut M10×1.25	4	
12	69000140	GB/T5786-M12*1.25*45-8.8I	Bolt M12×1.25×45	2	
13	69000314	GB/T6171-M12*1.25-8J	Nut M12×1.25	2	
14	69135575	M30043005010	Deflation plug M8	2	
15	69010797	JB982-8	Combination seal gasket 8	2	
16	69135577	M30043005012	Spring	2	2-3t

图85/FIG85. 后起升油缸(二级全自由)/REAR LIFT CYLINDER(FULL FREE 2-STAGE MAST)

FD20/25/30/35（T）、FG(L)20/25/30/35（T）

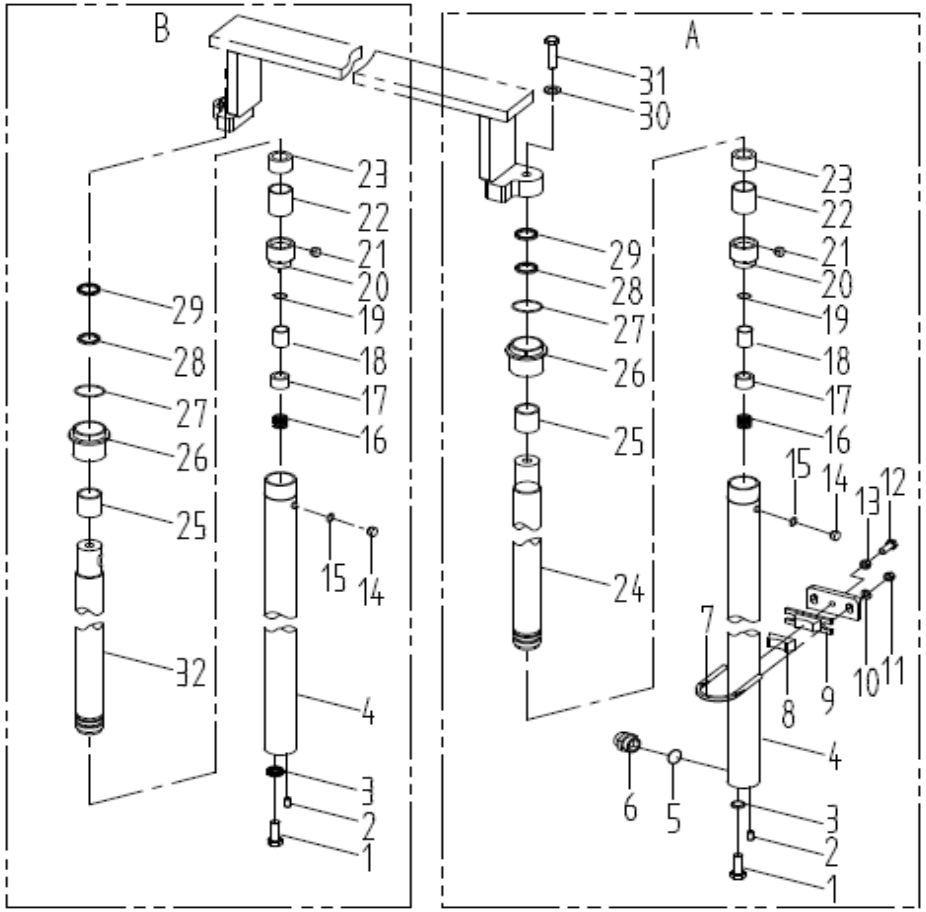

序号 Item No.	ID No.	代号 Part No.	名称 Description	数量 Q' ty	备注 Remark
-	69135615	M35043005013	Spring	2	3.5t
17	69135572	M30043005007	Sleeve	2	2-3t
-	69135610	M35043005008	Sleeve	2	3.5t
18	69135571	M30043005006	Buffering plunger	2	2-3t
-	69135609	M35043005007	Buffering plunger	2	3.5t
19	69136818	GB895.2-86	Axial steel wire snap ring 18	2	2-3t
-	69136819	GB895.2-86-20	Axial steel wire snap ring 20	2	3.5t
20	69135548	M20043005004	Piston	2	2-2.5t
-	69135570	M30043005005	Piston	2	3t
-	69135608	M35043005006	Piston	2	3.5t
21	69094106	GB/T80-M6*5	Bolt M5×6	2	
22	69135549	M20043005005	Orifice bearing ring D45×20×2.5	2	2-2.5t
-	69135573	M30043005008	Orifice bearing ring D50×20×2.5	2	3t
-	69135611	M35043005009	Orifice bearing ring D56×20×2.5	2	3.5t
23	69136820	TLC-15T18	Spacer Φ35×100	2	2-2.5t
-	69136821	TLC-20T12	Spacer Φ40×100	2	3t
-	69135607	M35043005005	Spacer Φ45×100	2	3.5t
24	N/A	Max202J04-1	Piston Rod (right)	1	2-2.5t NNS
-	N/A	Max302J04-1	Piston Rod (right)	1	3t NNS
-	N/A	Max352J04-1	Piston Rod (right)	1	3.5t NNS
25	69135423	A30480-05014	Bushing bearing 35×39×30	2	2-2.5t
-	69135380	A20480-05011	Bushing bearing 40×44×30	2	3t
-	69135453	A30480-06013	Bushing bearing 45×50×30	2	3.5t
26	69135547	M20043005003	Guiding sleeve	2	2-2.5t
-	69135569	M30043005003	Guiding sleeve	2	3t

图85/FIG85. 后起升油缸(二级全自由)/REAR LIFT CYLINDER(FULL FREE 2-STAGE MAST)

FD20/25/30/35（T）、FG(L)20/25/30/35（T）

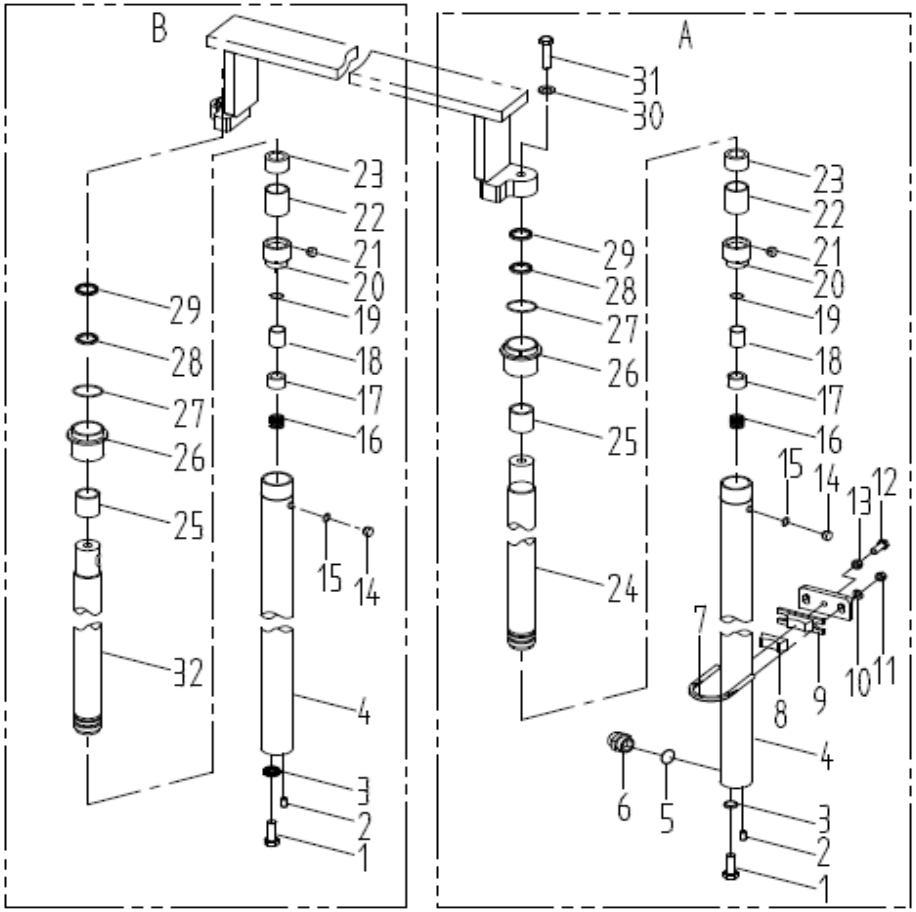

序号 Item No.	ID No.	代号 Part No.	名称 Description	数量 Q' ty	备注 Remark
-	69135605	M35043005003	Guiding sleeve	2	3.5t
27	69136822	GB/T3452.1-2005-45×2.65	O-ring 45×2.65	2	2-2.5t
-	69136823	GB/T3452.1-2005-50×2.65	O-ring 50×2.65	2	3t
-	69136824	GB/T3452.1-2005-56×2.65	O-ring 56×2.65	2	3.5t
28	69135419	A30480-05010	Axial seal 35×45×6	2	2-2.5t
-	69135574	M30043005009	Axial seal 40×50×6	2	3t
-	69135613	M35043005011	Axial seal 45×50×6	2	3.5t
29	69135550	M20043005006	Dust-proof seal 35×47×7/10	2	2-2.5t
-	69135379	A20480-05010	Dust-proof seal 40×52×7/10	2	3t
-	69135452	A30480-06012	Dust-proof seal 45×57×7/10	2	3.5t
30	69000056	GB/T93-16	Washer 16	2	
31	69006551	GB/T5783-M16*40-8.8J	Bolt M16×40	2	
32	N/A	Max202J03-1	Piston Rod（left）	1	2-2.5t NNS
-	N/A	Max302J03-2	Piston Rod（left）	1	3t NNS
-	N/A	Max352J03-2	Piston Rod（left）	1	3.5t NNS

图85/FIG85.	后起升油缸(二级全自由)/REAR LIFT CYLINDER(FULL FREE 2-STAGE MAST)

FD20/25/30/35（T）、FG(L)20/25/30/35（T)

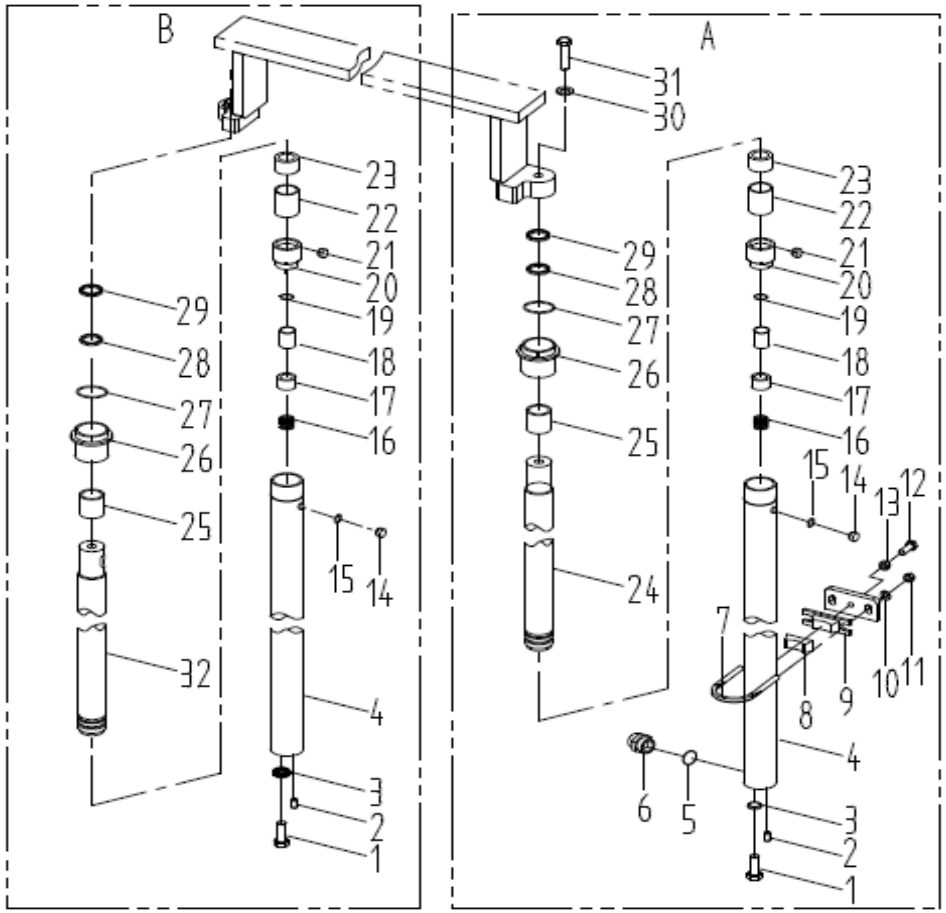

2-3.5t后起升油缸选用表(二级全自由)
REAR LIFT CYLINDER OPTION TABLE(FULL FREE 2-STAGE MAST)

起升高度LIFTING HEIGHT	ID No.	2-2.5t后起升油缸（左）Rear Lift cylinder L.H	ID No.	
3000	69003314	M20043006000-3.0M	69102420	
3300	69005079	M20043006000-3.3M	69102424	
3500	69006780	M20043006000-3.5M	69102433	
3700	69009024	M20043006000-3.7M	69102451	
4000	69049067	M20043006000-4.0M	69103583	
4500	69049068	M20043006000-4.5M	69103584	
5000	69049070	M20043006000-5.0M	69103585	
5500	69049071	M20043006000-5.5M	69103586	
6000	69049072	M20043006000-6.0M	69103587	

图85/FIG85. 后起升油缸(二级全自由)/REAR LIFT CYLINDER(FULL FREE 2-STAGE MAST)

FD20/25/30/35（T）、FG(L)20/25/30/35（T)

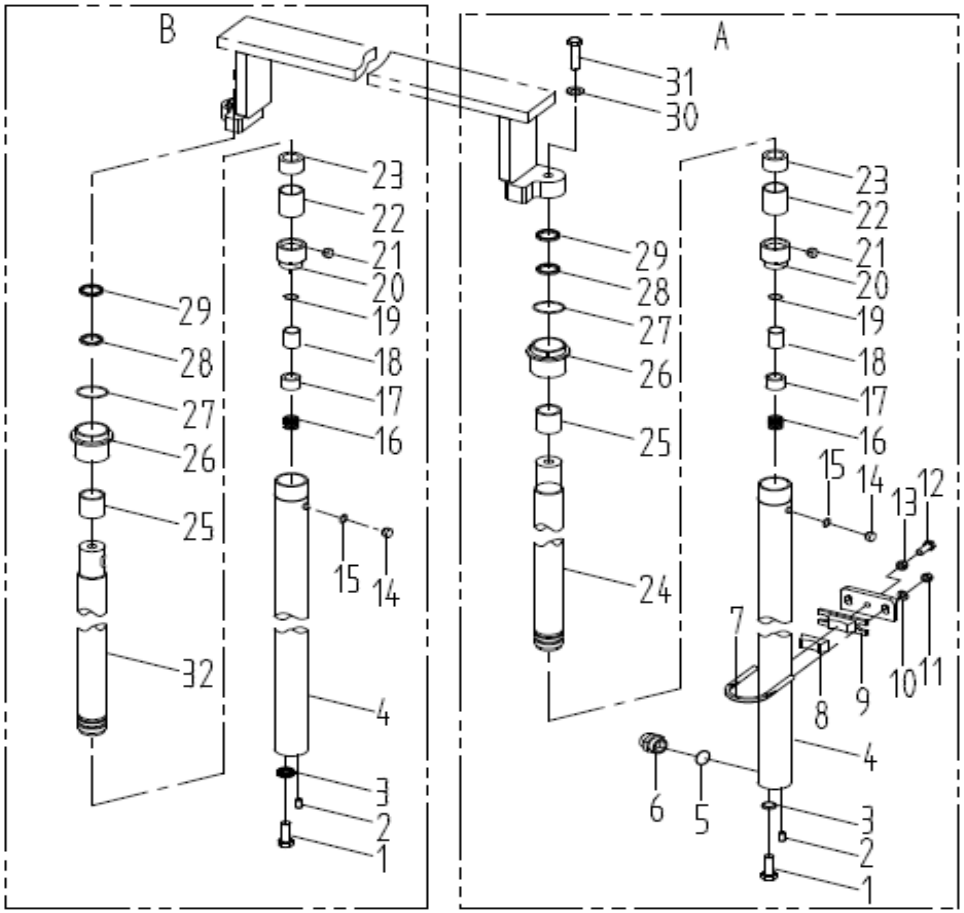

2-3.5t后起升油缸选用表(二级全自由)
REAR LIFT CYLINDER OPTION TABLE(FULL FREE 2-STAGE MAST)

起升高度LIFTING HEIGHT	ID No.	3t后起升油缸（左）Rear Lift cylinder L.H.	ID No.	
3000	69102415	M30043005000-3.0M	69002818	
3300	69102454	M30043005000-3.3M	69009210	
3500	69102954	M30043005000-3.5M	69016085	
3700	69103576	M30043005000-3.7M	69049035	
4000	69103565	M30043005000-4.0M	69017621	
4500	69103578	M30043005000-4.5M	69049038	
5000	69103579	M30043005000-5.0M	69049039	
5500	69103577	M30043005000-5.5M	69049037	
6000	69103580	M30043005000-6.0M	69049040	

图85/FIG85.	后起升油缸(二级全自由)/REAR LIFT CYLINDER(FULL FREE 2-STAGE MAST)

FD20/25/30/35（T）、FG(L)20/25/30/35（T)

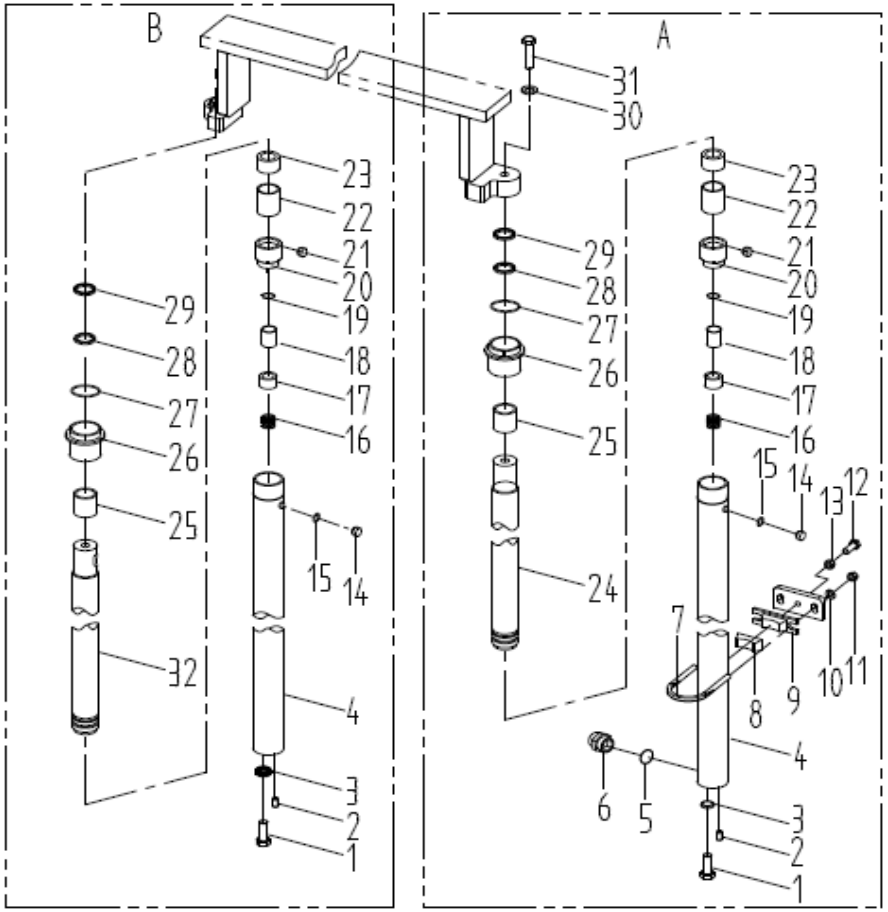

2-3.5t后起升油缸选用表(二级全自由)
REAR LIFT CYLINDER OPTION TABLE(FULL FREE 2-STAGE MAST)

起升高度 LIFTING HEIGHT	ID No.	3.5t后起升油缸（左） Rear Lift cylinder L.H	ID No.	3.5t后起升油缸（	备注 REMARKS
3000	69102414	M35043006000-3.0M	69009080	M35043005000-	
3300	69102755	M35043006000-3.3M	69010680	M35043005000-	
3500	69103568	M35043006000-3.5M	69024648	M35043005000-	
3700	69104174	M35043006000-3.7M	69050433	M35043005000-	
4000	69105388	M35043006000-4.0M	69105389	M35043005000-	
4500	69050436	M35043006000-4.5M	69103599	M35043005000-	
5000	69103602	M35043006000-5.0M	69050459	M35043005000-	
5500	69103601	M35043006000-5.5M	69050451	M35043005000-	
6000	69103603	M35043006000-6.0M	69050470	M35043005000-	

图86/FIG86. 前起升油缸(三级全自由)/FRONT LIFT CYLINDER(FULL FREE 3-STAGE MAST)

FD20/25/30/35（T）、FG(L)20/25/30/35（T）

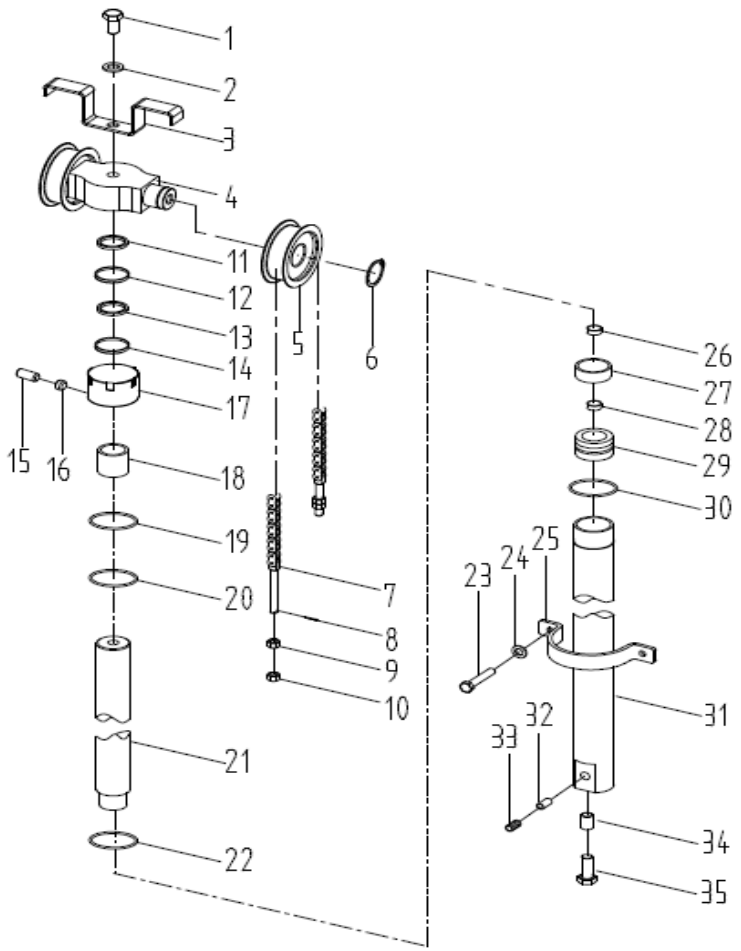

序号 Item No.	ID No.	代号 Part No.	名称 Description	数量 Q' ty	备注 Remark
A	N/A	MJ20384-03000	Front lift cylinder	1	2-2.5t
-	N/A	MJ30384-03000	Front lift cylinder	1	3-3.5t
1	69000175	GB/T5782-M16*75-8.8J	Bolt M16×1.5×75	1	
2	69000056	GB/T93-16	Washer 16	1	
3	69106552	M30074000003-Black	Chain protector	1	
4	69087535	MJ30384-00002	Cylinder head	1	2-3t
-	69086847	MJ35384-00001	Cylinder head	1	3.5t
5	69018464	M30074008000	Chain roller 780708H	2	2-3t
-	69007748	M3538006000	Chain roller A60309	2	3.5t
6	69000070	GB/T894.1-Φ40	Snap ring 40	2	
7	N/A	M20074006000	Chain ass'y LH1234	2	2-2.5t AS NEEDED
-	N/A	M30074011000	Chain ass'y LH1623	2	3t AS NEEDED
-	N/A	M35074001000	Chain ass'y LH1634	2	3.5t AS NEEDED
8	69017915	GB/T91-3.2*40	Cotter pin 3.2×40	4	
9	69107732	M3038001001	Nut M18×1.5	4	2-3t
-	69012580	M3538001001	Nut M22×1.5	4	3.5t
10	69000004	GB/T6171-M18*1.5-8J	Nut M18×1.5	4	2-3t
-	69136816	GB/T6171-2000-M22*1.5	Nut M22×1.5	4	3.5t
11	69135666	MJ20384-03010	Dust-proof seal 60×70×8/11	1	2-2.5t
-	69135711	MJ30384-03010	Dust-proof seal 70×84×8/11	1	3-3.5t
12	69135662	MJ20384-03006	Snap ring d70×Φ60×3	1	2-2.5t
-	69135707	MJ30384-03006	Snap ring d80×Φ70×3	1	3-3.5t
13	69135664	MJ20384-03008	Axial seal 60×70×6	1	2-2.5t
-	69135709	MJ30384-03008	Axial seal 70×80×6	1	3-3.5t
14	69018828	GB/T1235-75*3.1	O-ring 75×3.1	1	2-2.5t

图86/FIG86. 前起升油缸(三级全自由)/FRONT LIFT CYLINDER(FULL FREE 3-STAGE MAST)

FD20/25/30/35（T）、FG(L)20/25/30/35（T）

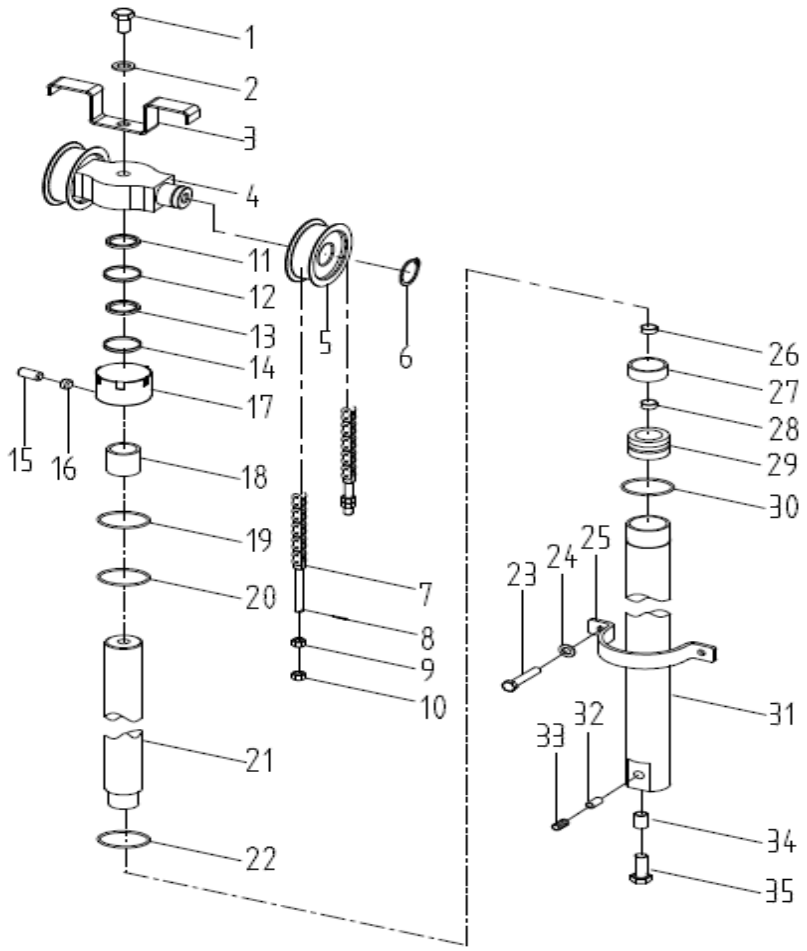

序号 Item No.	ID No.	代号 Part No.	名称 Description	数量 Q' ty	备注 Remark
-	69023228	LS23228	O-ring 85×3.1	1	3-3.5t
15	69094106	GB/T80-M6*5	Screw M6×5	1	内六角
16	69040793	JB982-6	Combination gasket 6	1	
17	69135659	MJ20384-03003	Guiding sleeve	1	2-2.5t
-	69135704	MJ30384-03003	Guiding sleeve	1	3-3.5t
18	69135667	MJ20384-03011	Bushing Bearing 60×65×45	1	2-2.5t
-	69135712	MJ30384-03011	Bushing Bearing 70×75×45	1	3-3.5t
19	69135663	MJ20384-03007	Snap ring d75×Φ65×3	1	2-2.5t
-	69135708	MJ30384-03007	Snap ring d85×Φ75×3	1	3-3.5t
20	69018828	GB/T1235-75*3.1	O-ring 75×3.1	1	2-2.5t
-	69023228	LS23228	O-ring 85×3.1	1	3-3.5t
21	N/A	A20B4-10501	Piston Rod	1	2-2.5t NNS
-	N/A	Max303J03B-1	Piston Rod	1	3-3.5t NNS
22	69135661	MJ20384-03005	Orifice bearing ring D75×20×2.5	1	2-2.5t
-	69135706	MJ30384-03005	Orifice bearing ring D85×20×2.5	1	3-3.5t
23	69032087	GB/T5786-M10*1.25*20-8.8I	Bolt M10×1.25×20	2	
24	69000053	GB/T93-10	Washer 10	2	
25	69112410	MJ20384-00001-Black	Hold hoop	1	2-2.5t
-	69106554	MJ30384-00001-Black	Hold hoop	1	3t
-	69106433	MJ35382-00002-Black	Hold hoop	1	3.5t
26	69135669	MJ20384-03013	Steel wire snap ring d40	1	
27	69135714	MJ30384-03200	One-way valve	1	
28	69084487	GB/T893.1-Φ22	Orifice circlip 22	1	
29	69135660	MJ20384-03004	Piston	1	2-2.5t
-	69135705	MJ30384-03004	Piston	1	3-3.5t

图86/FIG86. 前起升油缸(三级全自由)/FRONT LIFT CYLINDER(FULL FREE 3-STAGE MAST)

FD20/25/30/35（T）、FG(L)20/25/30/35（T）

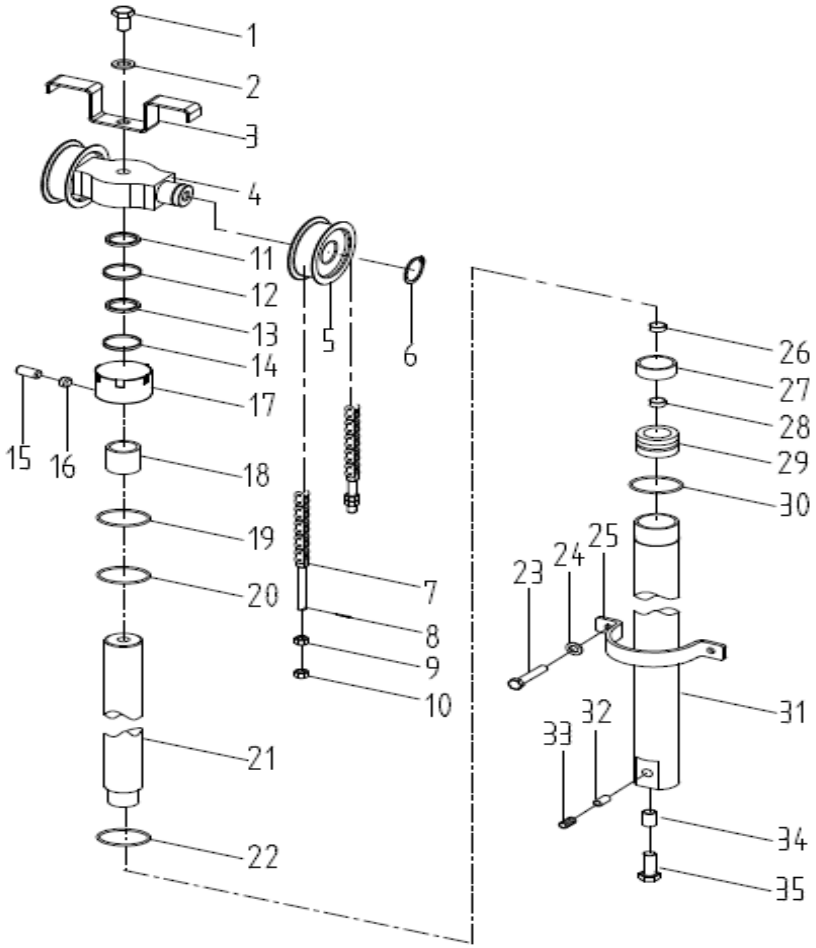

序号 Item No.	ID No.	代号 Part No.	名称 Description	数量 Q' ty	备注 Remark
30	69135665	MJ20384-03009	Orifice seal 75×65×6	2	2-2.5t
-	69135710	MJ30384-03009	Orifice seal 85×75×6	2	3-3.5t
31	N/A	A20B4-10510	Cylinder body	1	2-2.5t NNS
-	N/A	A30B4-10510	Cylinder body	1	3-3.5t NNS
32	69124144	GB/T3452.1-19*2.65-G	O-ring 19×2.65	1	
33	69072586	TLC-20T14	Slide valve	1	2-2.5t
-	69072587	TLC-30T27	Slide valve	1	3-3.5t
34	69000138	GB/T5786-M12*1.25*35-8.8I	Bolt M12×1.25×25	1	
35	69000054	GB/T93-12	Washer 12	1	

图86/FIG86.	前起升油缸(三级全自由)/FRONT LIFT CYLINDER(FULL FREE 3-STAGE MAST)

FD20/25/30/35（T）、FG(L)20/25/30/35（T）

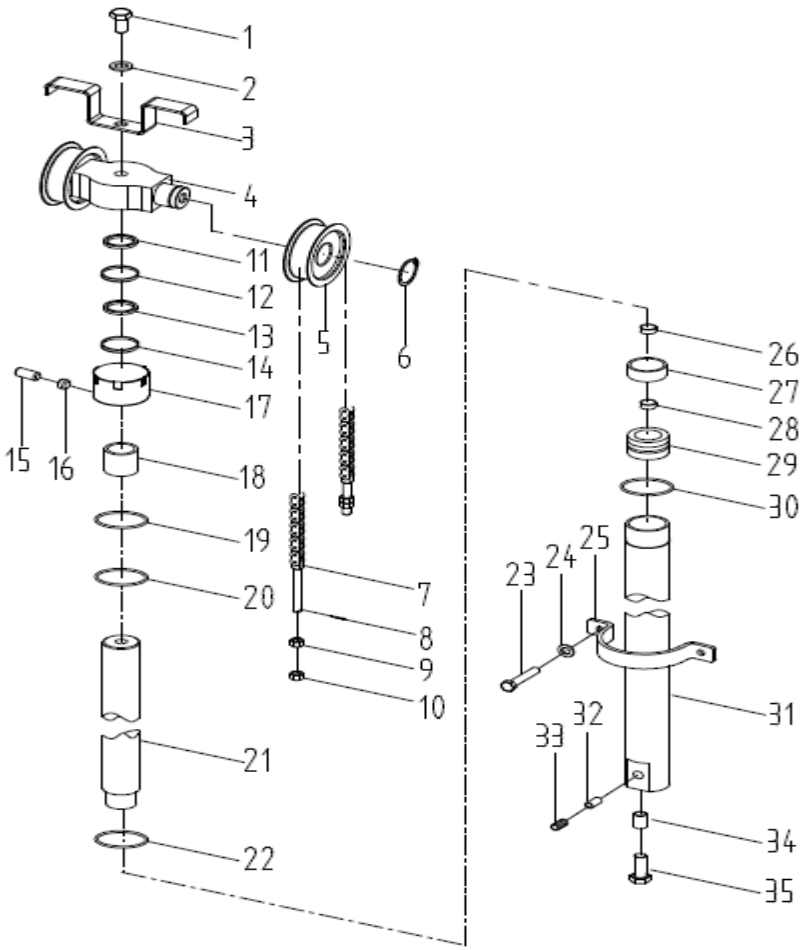

2-3.5t前起升油缸选用表(三级全自由)
FRONT LIFT CYLINDER OPTION TABLE(FULL FREE 3-STAGE MAST)

起升高度 LIFTING HEIGHT	ID No.	2-2.5t前起升油缸 Front lift cylinder	ID No.	3-3.5t前起升油	备注 REMARK
3600	69084042	MJ20384-03000-3.6M	69083119	MJ30384-	
4000	69084044	MJ20384-03000-4.0M	69083118	MJ30384-	
4350	69084045	MJ20384-03000-4.35M	69083120	MJ30384-	
4500	69084046	MJ20384-03000-4.5M	69083121	MJ30384-	
4800	69084047	MJ20384-03000-4.8M	69083122	MJ30384-	
5000	69084048	MJ20384-03000-5.0M	69083123	MJ30384-	
5400	69084049	MJ20384-03000-5.4M	69083124	MJ30384-	
5500	69084050	MJ20384-03000-5.5M	69083125	MJ30384-	
6000	69084051	MJ20384-03000-6.0M	69083126	MJ30384-	
6500	69084052	MJ20384-03000-6.5M	69083592	MJ30384-	

图86/FIG86. 前起升油缸(三级全自由)/FRONT LIFT CYLINDER(FULL FREE 3-STAGE MAST)

FD20/25/30/35（T）、FG(L)20/25/30/35（T）

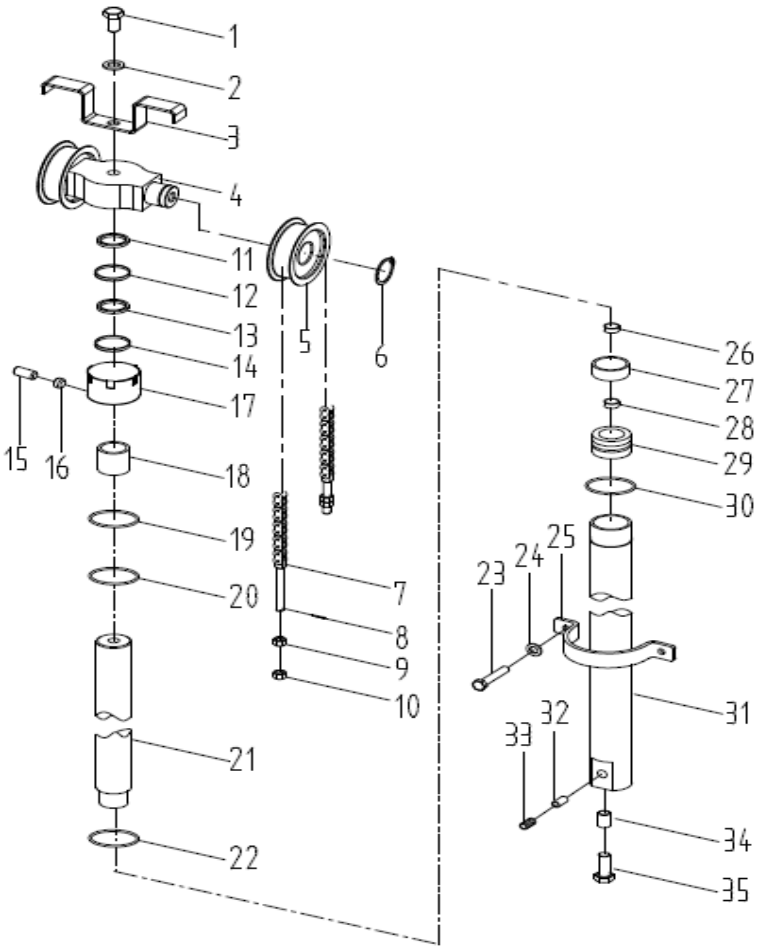

2-3.5t链条总成选用表(三级全自由)
CHAIN ASS'Y OPTION TABLE(FULL FREE 3-STAGE MAST)

起升高度 LIFTING HEIGHT	ID No.	2-2.5t链条总成 Chain Ass'y	ID No.	备注 REMARK
3600	69110074	M20074006000-3.6	69110216	
4000	69110076	M20074006000-4.0	69110231	
4350	69110077	M20074006000-4.35	69110234	
4500	69110081	M20074006000-4.5	69110235	
4800	69110083	M20074006000-4.8	69110237	
5000	69110085	M20074006000-5.0	69110239	
5400	69110086	M20074006000-5.4	69110242	
5500	69110087	M20074006000-5.5	69110240	
6000	69110088	M20074006000-6.0	69110241	
6500	69110090	M20074006000-6.5	69110243	
	69110570	M35074001000-6.5		

图86/FIG86. 前起升油缸(三级全自由)/FRONT LIFT CYLINDER(FULL FREE 3-STAGE MAST)

FD20/25/30/35（T）、FG(L)20/25/30/35（T）

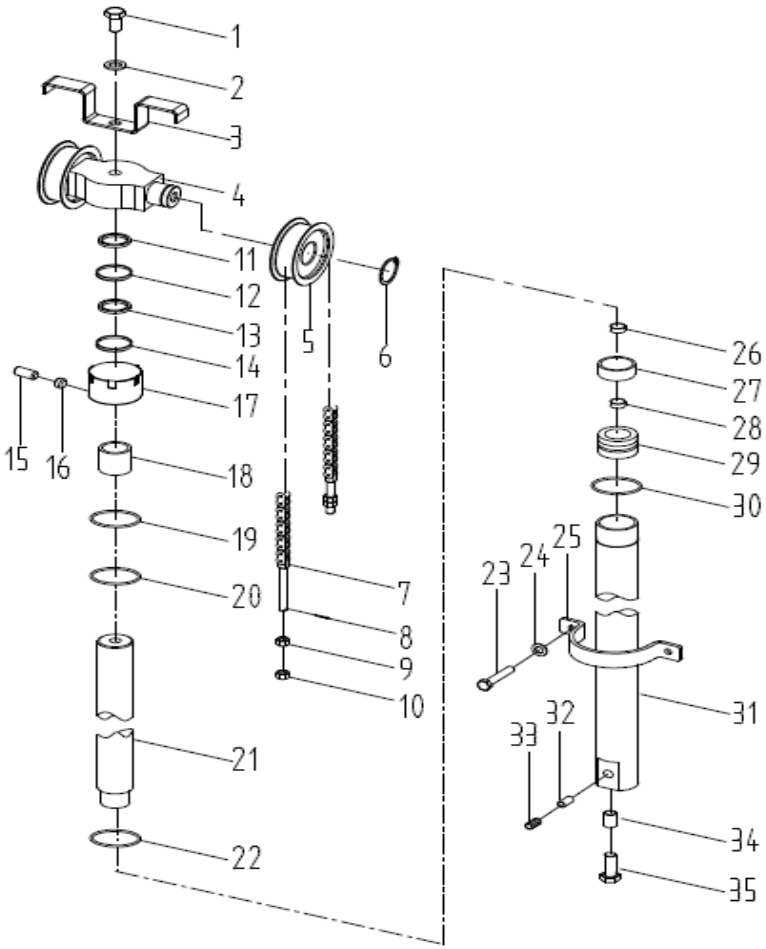

2-3.5t链条总成选用表(三级全自由)
CHAIN ASS'Y OPTION TABLE(FULL FREE 3-STAGE MAST)

起升高度 LIFTING HEIGHT	ID No.	3.5t链条总成 Chain Ass'y		备注 REMARK
3600	69110557	M35074001000-3.6		
4000	69110558	M35074001000-4.0		
4350	69110559	M35074001000-4.35		
4500	69110560	M35074001000-4.5		
4800	69110561	M35074001000-4.8		
5000	69110562	M35074001000-5.0		
5400	69110563	M35074001000-5.4		
5500	69110564	M35074001000-5.5		
6000	69110566	M35074001000-6.0		
6500	69110570	M35074001000-6.5		

图87/FIG87. 后起升油缸(三级全自由)/REAR LIFT CYLINDER(FULL FREE 3-STAGE MAST)

FD20/25/30/35（T）、FG(L)20/25/30/35（T）

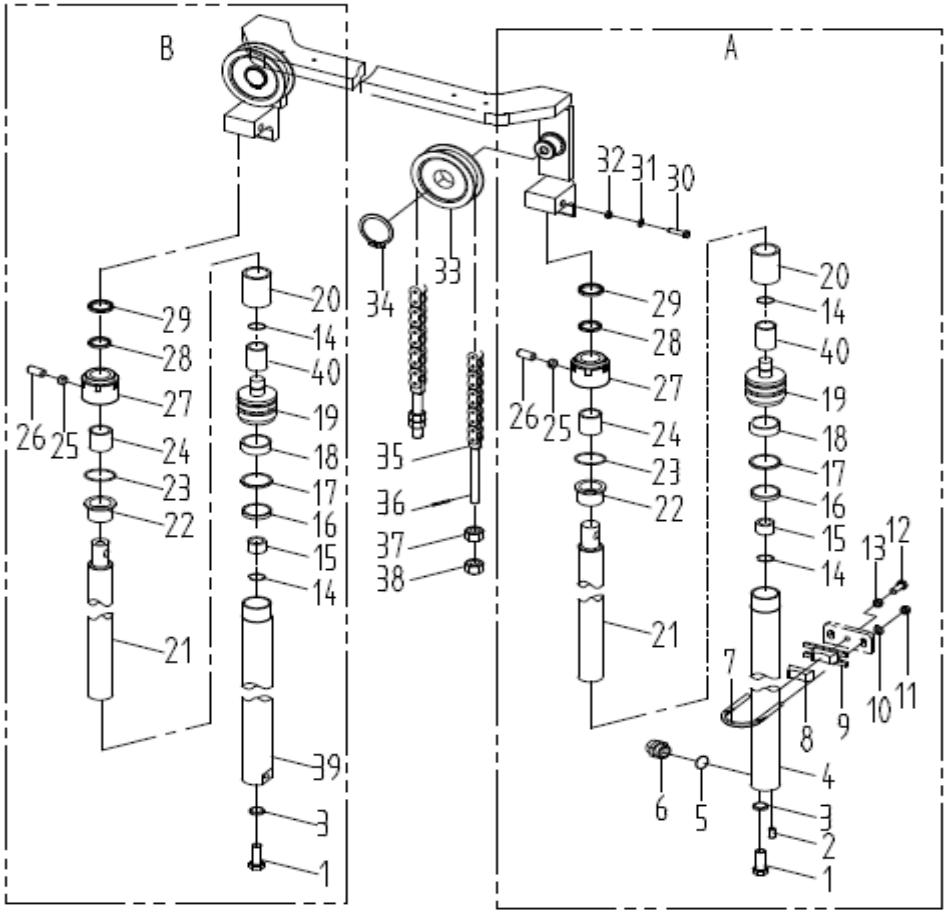

序号 Item No.	ID No.	代号 Part No.	名称 Description	数量 Q' ty	备注 Remark
A	N/A	A20484-02000	Lift cylinder (right)	1	2-2.5t
-	N/A	A30484-05000	Lift cylinder (right)	1	3t
-	N/A	A35484-05000	Lift cylinder (right)	1	3.5t
B	N/A	A20484-07000	Lift cylinder (left)	1	2-2.5t
-	N/A	A30484-06000	Lift cylinder (left)	1	3t
-	N/A	A35484-06000	Lift cylinder (left)	1	3.5t
1	69000137	GB/T5786-M12*1.25*25-8.8I	Bolt M12×1.25×25	2	
2	69135381	A20480-05012	Cylindrical pin 10×24	1	
3	69000054	GB/T93-12	Washer 12	2	
4	N/A	Max203J02A-100	Cylinder body (right)	1	2-2.5t NNS
-	N/A	Max303J02A-100	Cylinder body (right)	1	3-3.5t NNS
5	69124131	GB1235-22*2.4-G	O-ring 22×2.4	1	
6	69135383	A20480-05100	Safety valve	1	2-2.5t
-	69135455	A30480-06100	Safety valve	1	3-3.5t
7	69006791	M3038000007	Hoop	2	
8	69012173	M3038000008	Rubber sleeve	2	
9	69012171	M3038009000	Hoop seat	2	
10	69000250	GB/T97.1-10	Washer 10	4	
11	69000313	GB/T6171-M10*1.25-8J	Nut M10×1.25	4	
12	69000140	GB/T5786-M12*1.25*45-8.8I	Bolt M12×1.25×45	2	
13	69000314	GB/T6171-M12*1.25-8J	Nut M12×1.25	2	
14	69130898	GB/T895.1-30	Steel wire snap ring d30	4	
15	69033161	LS33161	Sleeve	2	
16	69135377	A20480-05008	Orifice seal 50×40×6	2	2-2.5t
-	69135450	A30480-06010	Orifice seal 56×45×7	2	3-3.5t

图87/FIG87. 后起升油缸(三级全自由)/REAR LIFT CYLINDER(FULL FREE 3-STAGE MAST)

FD20/25/30/35（T）、FG(L)20/25/30/35（T）

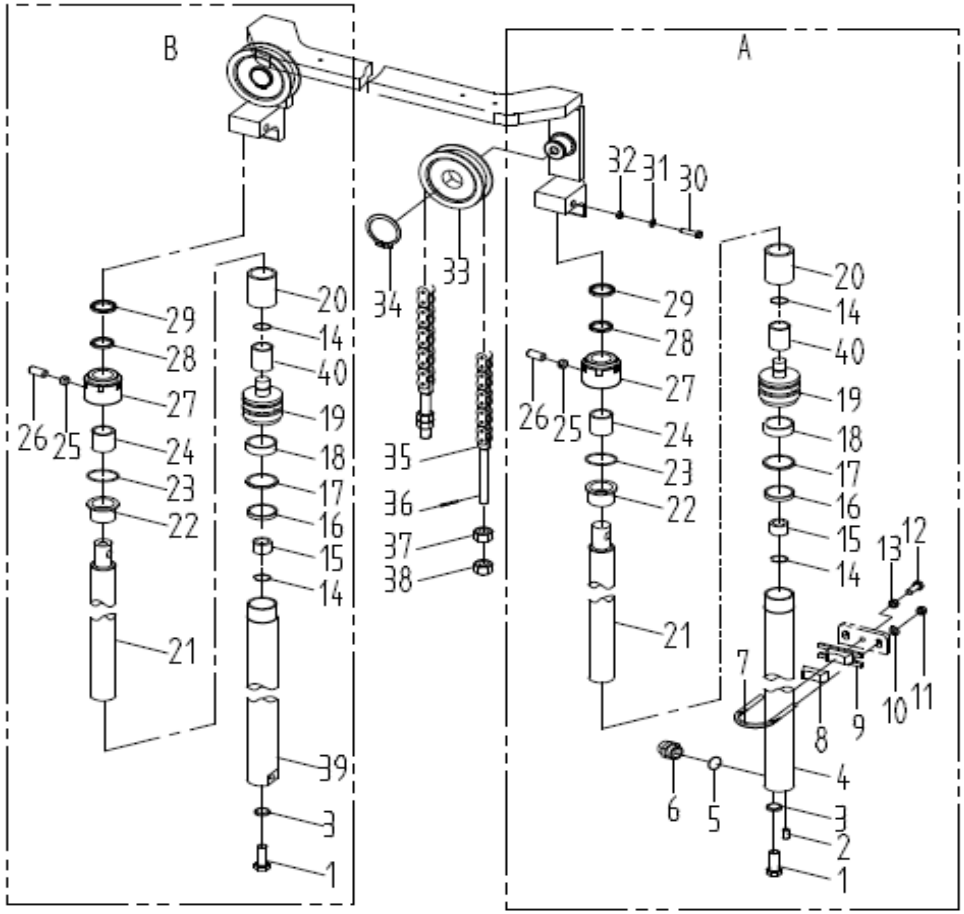

序号 Item No.	ID No.	代号 Part No.	名称 Description	数量 Q' ty	备注 Remark
17	69135376	A20480-05007	Snap ring Φ50×Φ40×3	2	2-2.5t
-	69135375	A20480-05006	Snap ring Φ56×Φ45×3	2	3-3.5t
18	69135448	A30480-06008	Orifice bearing ring D50×8×2.5	2	2-2.5t
-	69135374	A20480-05005	Orifice bearing ring D56×8×2.5	2	3-3.5t
19	69135445	A30480-06005	Piston	2	2-2.5t
-	69136216	Max203J01-2	Piston	2	3-3.5t
20	69136216	Max203J01-2	Spacer	2	2-2.5t
-	69136825	Max303J01-2	Spacer	2	3-3.5t
21	N/A	Max303J01-1	Piston rod	2	2-2.5t NNS
-	N/A	Max353J01-1	Piston rod	2	3-3.5t NNS
22	69135373	A20480-05004	Bushing	2	2-2.5t
-	69135444	A30480-06004	Bushing	2	3-3.5t
23	69024340	GB1235-60*3.1	O-ring 60×3.1	2	2-2.5t
-	69009541	LS9541	O-ring 68×3.1	2	3-3.5t
24	69135380	A20480-05011	Bushing Bearing 40×44×30	2	2-2.5t
-	69135453	A30480-06013	Bushing Bearing 45×50×30	2	3-3.5t
25	69135454	A30480-06014	Nylon pad Φ6×3	2	
26	69008637	GB/T77-M8*8-12.9J	Hexagon headed screw M8×8	2	
27	69135372	A20480-05003	Cylinder cap	2	2-2.5t
-	69135443	A30480-06003	Cylinder cap	2	3-3.5t
28	69135378	A20480-05009	Axial seal 40×50×7	2	2-2.5t
-	69135451	A30480-06011	Axial seal 45×55×7	2	3-3.5t
29	69135379	A20480-05010	Dust-proof seal 40×52×7/10	2	2-2.5t
-	69135452	A30480-06012	Dust-proof seal 45×57×7/10	2	3-3.5t
30	69000143	GB/T5786-M12*1.25*80-8.8I	Bolt M12×1.25×80	2	

图87/FIG87. 后起升油缸(三级全自由)/REAR LIFT CYLINDER(FULL FREE 3-STAGE MAST)

FD20/25/30/35（T）、FG(L)20/25/30/35（T）

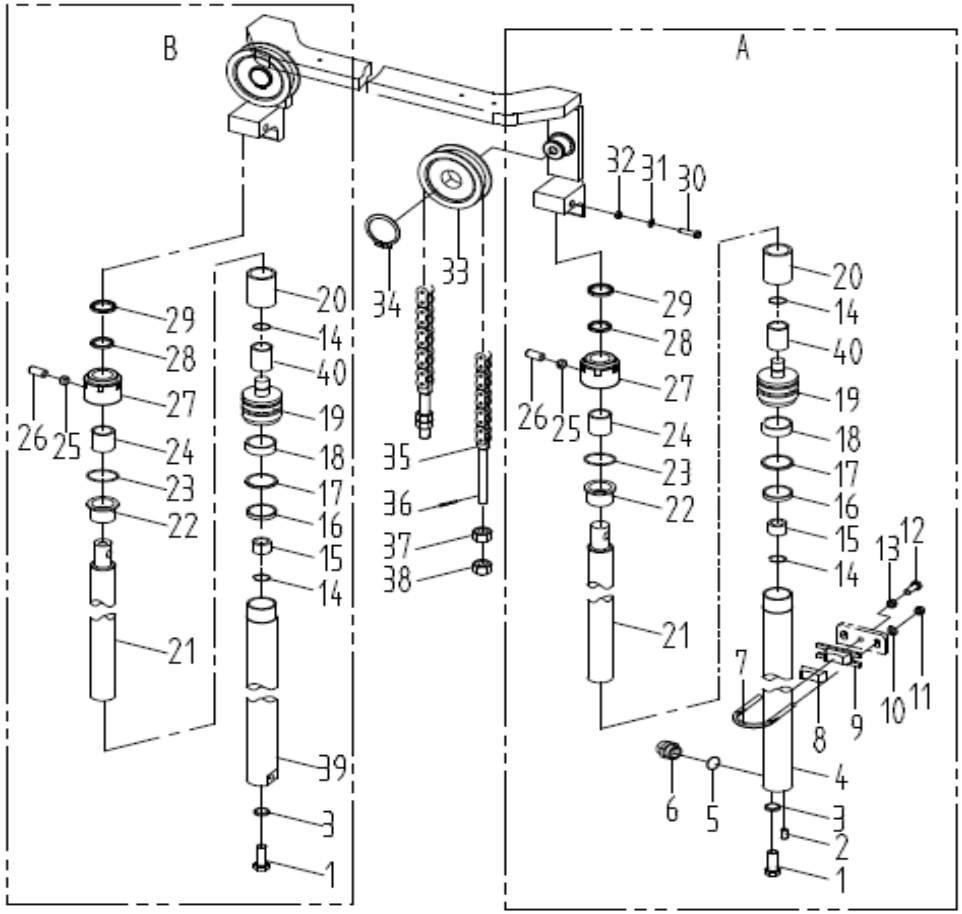

序号 Item No.	ID No.	代号 Part No.	名称 Description	数量 Q' ty	备注 Remark
31	69000054	GB/T93-12	Washer 12	2	
32	69000314	GB/T6171-M12*1.25-8J	Nut 12×1.25	2	
33	69009020	M30074007000	Chain roller 780708H	2	2-3t
-	69007748	M3538006000	Chain roller A60309	2	3-3.5t
34	69000070	GB/T894.1-Φ40	Snap ring 40	2	
35	N/A	M20074001000	Chain ass'y LH1234	2	2.5t AS NEEDED
-	N/A	M30074001000	Chain ass'y LH1623	2	3t AS NEEDED
-	N/A	M35074006000	Chain ass'y LH1634	2	3.5t AS NEEDED
-	N/A	S40484XLS01000	Chain ass'y LH1634	2	x4t AS NEEDED
36	69017915	GB/T91-3.2*40	Cotter pin 3.2×40	4	
37	69107732	M3038001001	Nut M18×1.5	4	2-3t
-	69012580	M3538001001	Nut M22×1.5	4	3.5t
38	69000004	GB/T6171-M18*1.5-8J	Nut M18×1.5	4	2-3t
-	69136816	GB/T6171-2000-M22*1.5	Nut M22×1.5	4	3.5t
39	N/A	Max203J01A-100	Cylinder body（left）	1	2-2.5t NNS
-	N/A	Max303J01A-100	Cylinder body（left）	1	3-3.5t NNS
40	69135384	A20480-05200	One-way valve	1	

图87/FIG87.	后起升油缸(三级全自由)/REAR LIFT CYLINDER(FULL FREE 3-STAGE MAST)

FD20/25/30/35（T）、FG(L)20/25/30/35（T）

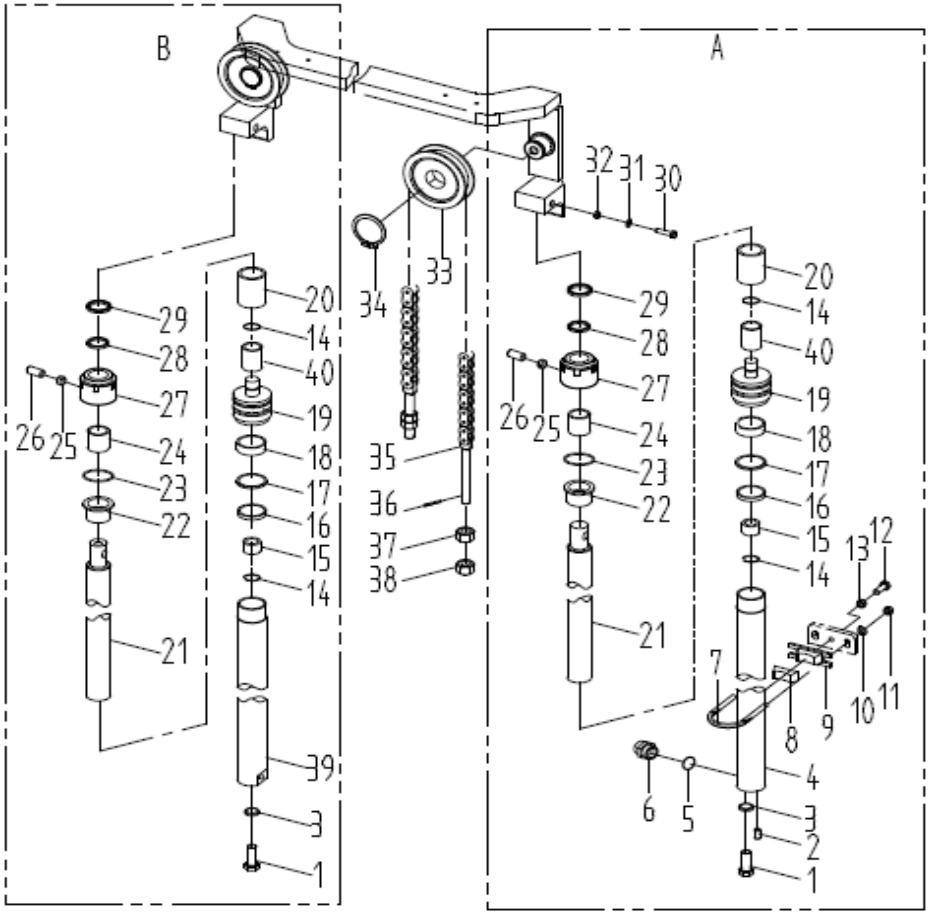

2-3.5t后起升油缸选用表(三级全自由)
REAR LIFT CYLINDER OPTION TABLE(FULL FREE 3-STAGE MAST)

起升高度LIFTING HEIGHT	ID No.	2-2.5t后起升油缸（左）Rear Lift cylinder	ID No.	备注 REMARK
3600	69103277	A20484-07000-3.6M	69042773	
4000	69103279	A20484-07000-4.0M	69043014	标准
4350	69103281	A20484-07000-4.35M	69043015	
4500	69103286	A20484-07000-4.5M	69043016	
4800	69103296	A20484-07000-4.8M	69043017	
5000	69103299	A20484-07000-5.0M	69043018	
5400	69103300	A20484-07000-5.4M	69043019	
5500	69103303	A20484-07000-5.5M	69043020	
6000	69103305	A20484-07000-6.0M	69043021	
6500	69103308	A20484-07000-6.5M	69043022	

图87/FIG87. 后起升油缸(三级全自由)/REAR LIFT CYLINDER(FULL FREE 3-STAGE MAST)

FD20/25/30/35（T）、FG(L)20/25/30/35（T）

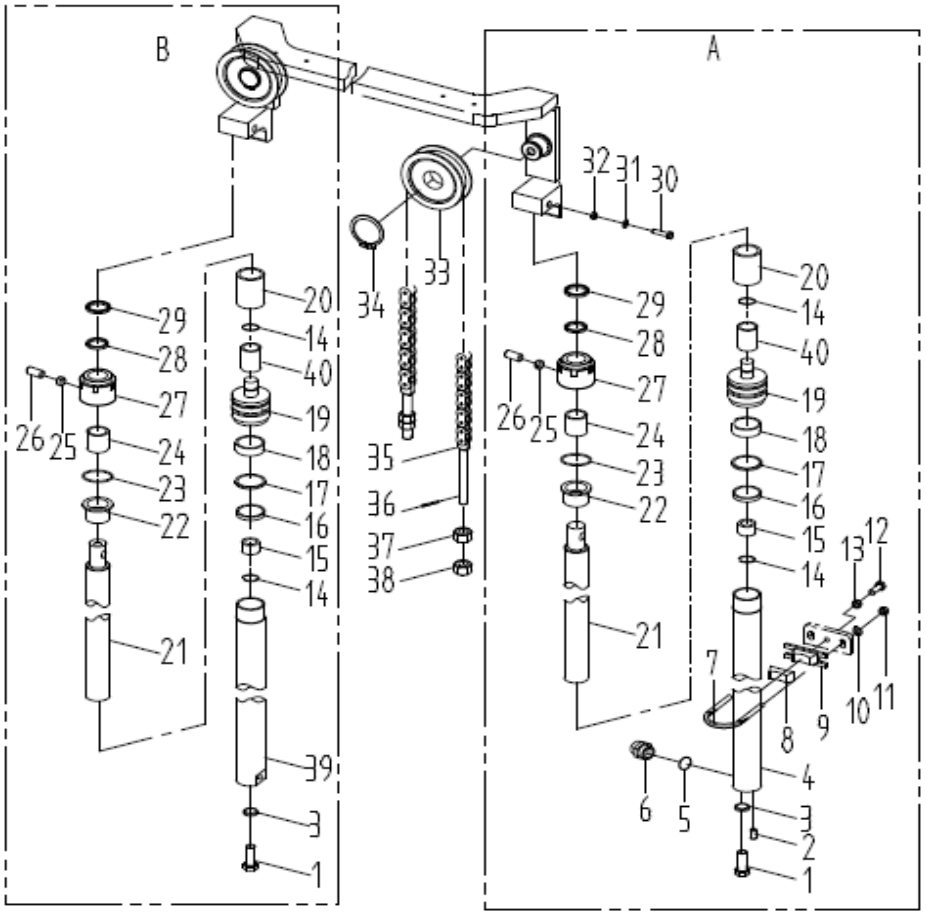

2-3.5t后起升油缸选用表(三级全自由)
REAR LIFT CYLINDER OPTION TABLE(FULL FREE 3-STAGE MAST)

起升高度LIFTING HEIGHT	ID No.	3t后起升油缸（左）Rear Lift cylinder L.H.	ID No.	备注 REMARK
3600	69103196	A30484-06000-3.6M	69036340	
4000	69103202	A30484-06000-4.0M	69036341	标准
4350	69103204	A30484-06000-4.35M	69036342	
4500	69103120	A30484-06000-4.5M	69036339	
4800	69103205	A30484-06000-4.8M	69036343	
5000	69103206	A30484-06000-5.0M	69036344	
5400	69103411	A30484-06000-5.4M	69043350	
5500	69103208	A30484-06000-5.5M	69036345	
6000	69103210	A30484-06000-6.0M	69036346	
6500	69103501	A30484-06000-6.5M	69048392	

图87/FIG87. 后起升油缸(三级全自由)/REAR LIFT CYLINDER(FULL FREE 3-STAGE MAST)

FD20/25/30/35（T）、FG(L)20/25/30/35（T）

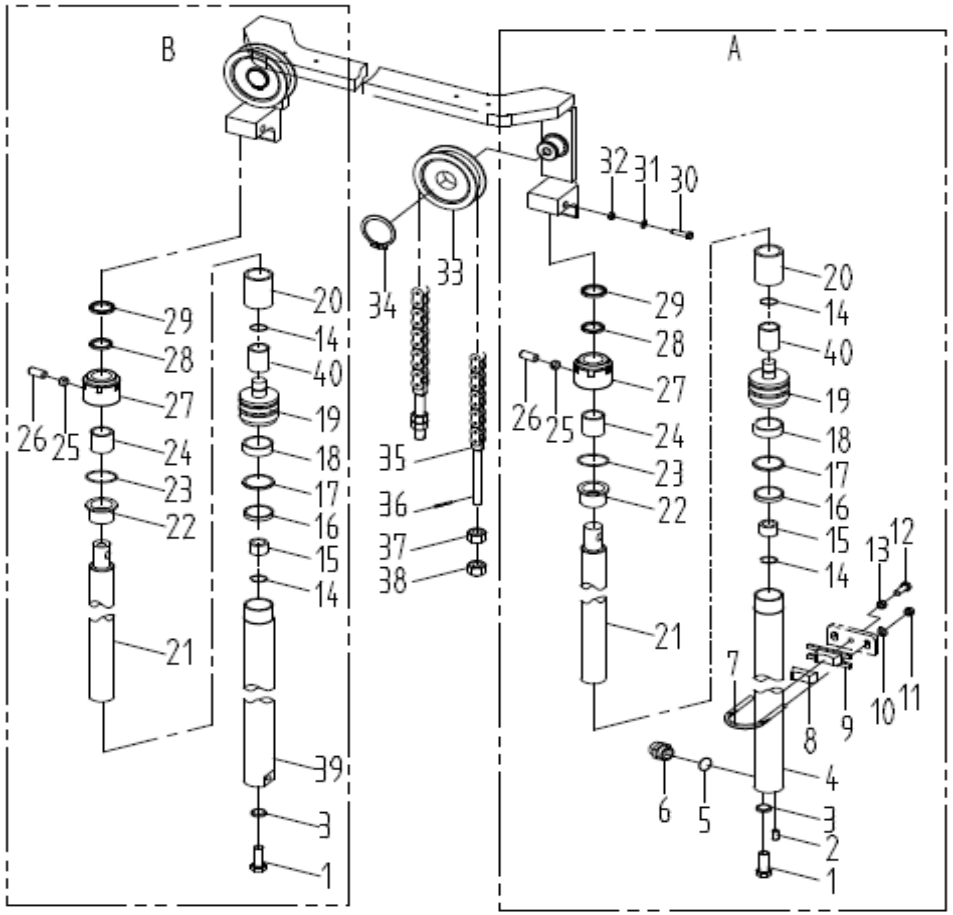

2-3.5t后起升油缸选用表(三级全自由)
REAR LIFT CYLINDER OPTION TABLE(FULL FREE 3-STAGE MAST)

起升高度LIFTING HEIGHT	ID No.	3.5t后起升油缸（左） Lift cylinder L.H.	ID No.	备注 REMARK
3600	69103311	A35484-06000-3.6M	69043037	
4000	69103334	A35484-06000-4.0M	69043053	
4350	69103335	A35484-06000-4.35M	69043054	
4500	69103352	A35484-06000-4.5M	69043055	
4800	69103380	A35484-06000-4.8M	69043056	
5000	69103385	A35484-06000-5.0M	69043057	
5400	69103386	A35484-06000-5.4M	69043058	
5500	69103387	A35484-06000-5.5M	69043059	
6000	69103388	A35484-06000-6.0M	69043060	
6500	69103392	A35484-06000-6.5M	69043061	

图87/FIG87. 后起升油缸(三级全自由)/REAR LIFT CYLINDER(FULL FREE 3-STAGE MAST)

FD20/25/30/35（T）、FG(L)20/25/30/35（T)

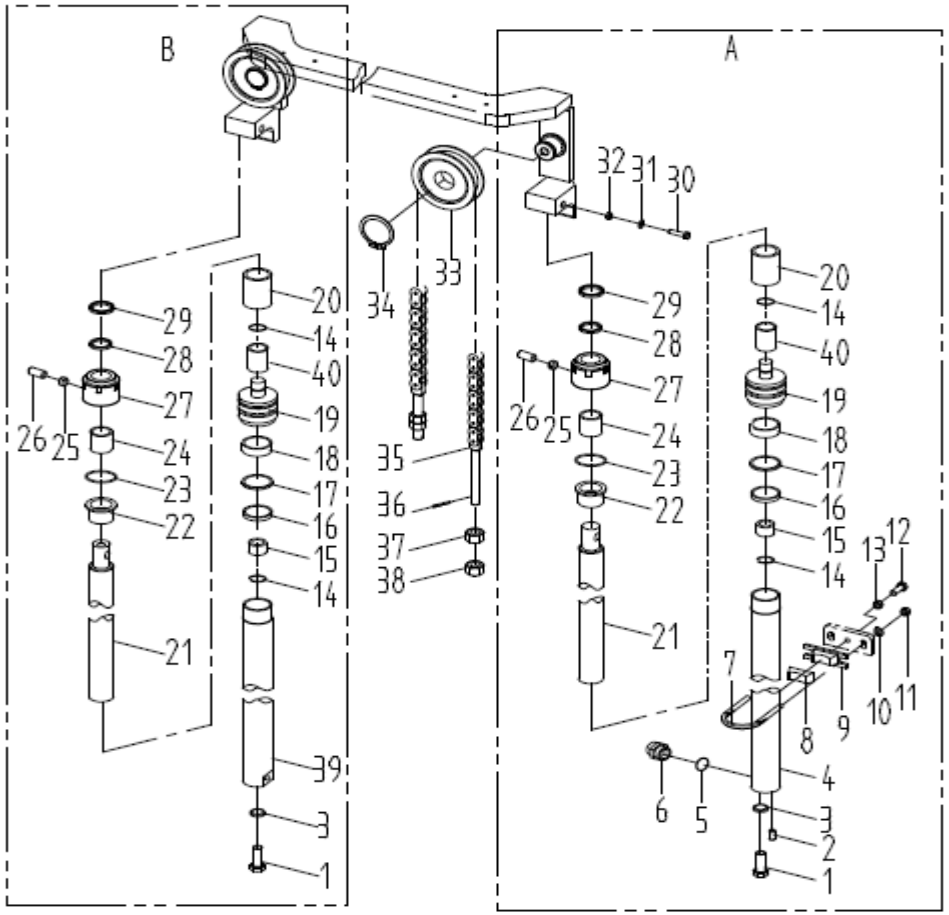

2-3.5t后起升油缸选用表(三级全自由)
REAR LIFT CYLINDER OPTION TABLE(FULL FREE 3-STAGE MAST)

起升高度LIFTING HEIGHT	ID No.	2.5t链条总成 Chain Ass'y	ID No.	备注 REMARK
3600	69119246	M20074001000-3.6	69110196	
4000	69119245	M20074001000-4.0	69110198	
4350	69119244	M20074001000-4.35	69110200	
4500	69119243	M20074001000-4.5	69110202	
4800	69119242	M20074001000-4.8	69110204	
5000	69119241	M20074001000-5.0	69110205	
5400	69119240	M20074001000-5.4	69110245	
5500	69119239	M20074001000-5.5	69110207	
6000	69119237	M20074001000-6.0	69110210	
6500	69119238	M20074001000-6.5	69110211	

图87/FIG87. 后起升油缸(三级全自由)/REAR LIFT CYLINDER(FULL FREE 3-STAGE MAST)

FD20/25/30/35（T）、FG(L)20/25/30/35（T)

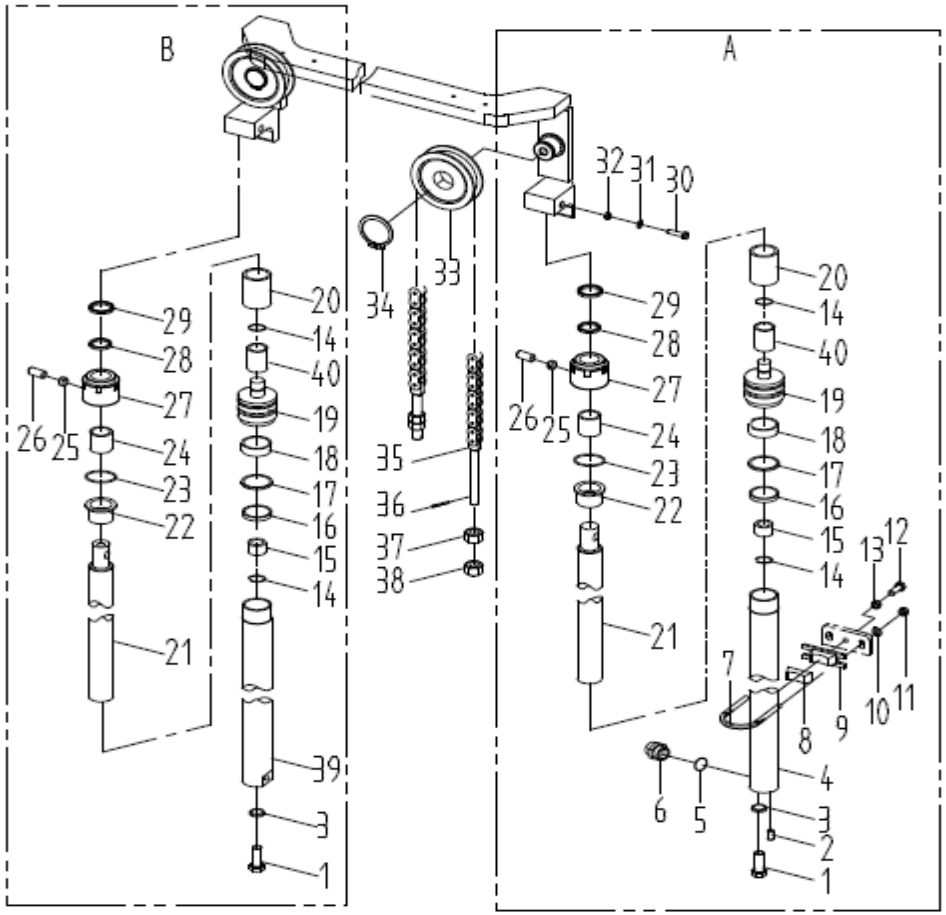

2-3.5t后起升油缸选用表(三级全自由)
REAR LIFT CYLINDER OPTION TABLE(FULL FREE 3-STAGE MAST)

起升高度LIFTING HEIGHT	ID No.	3.5t链条总成 Chain Ass'y		备注 REMARK
3600	69110580	M35074006000-3.6		
4000	69110581	M35074006000-4.0		
4350	69110582	M35074006000-4.35		
4500	69110583	M35074006000-4.5		
4800	69110584	M35074006000-4.8		
5000	69110585	M35074006000-5.0		
5400	69110586	M35074006000-5.4		
5500	69110587	M35074006000-5.5		
6000	69110588	M35074006000-6.0		
6500	69110589	M35074006000-6.5		

图88/Fig88.	倾斜油缸/TILT CYLINDER

FD20/25(T)、FG(L)20-25(T)

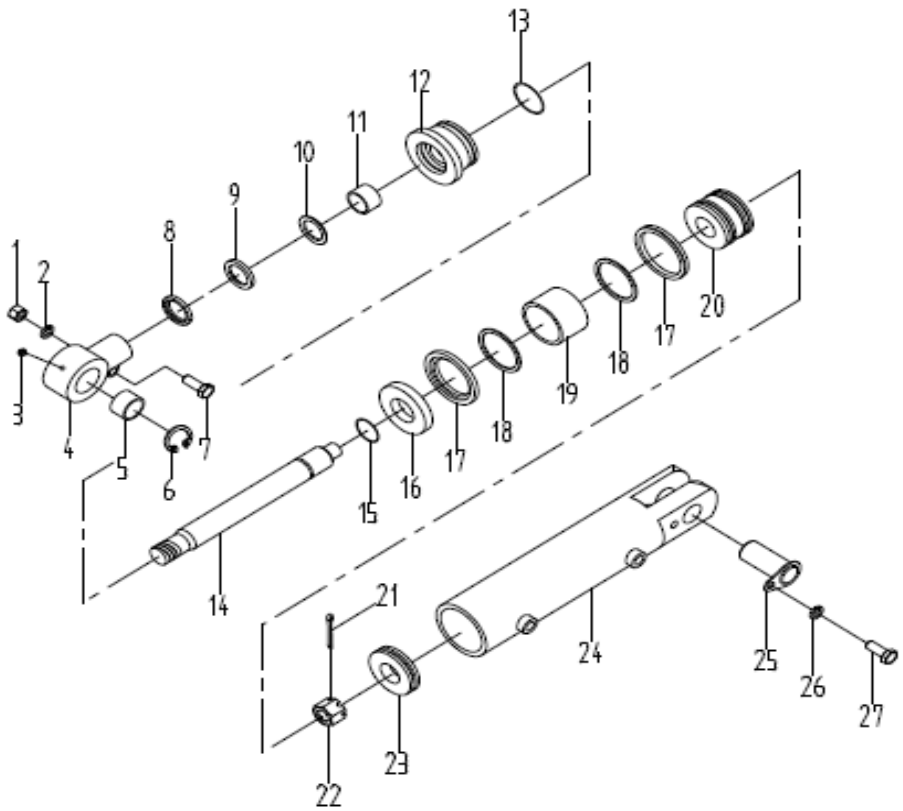

序号 Item No.	ID No.	代号 Part No.	名称 Description	数量 Q' ty	备注 Remark
A	N/A	A20480-04000	Tilt cylinder (right)	1	
B	N/A	A20480-07000	Tilt cylinder (left)	1	
1	69000316	GB/T6171-M14*1.5-8J	Nut M14×1.5 δ13	1	
2	69005111	GB/T93-14	Washer 14	1	
3	69003941	JB/T7940.1-M10*1	Nipple M10×1	1	
4	69135353	A20480-04013	Connect ring	1	
5	69063301	GB/T9163-2001	Knuckle bearing GE30ES	1	
6	69059825	GB/T893.1-Φ47	Orifice snap ring 47	1	
7	69136826	GB/T5786-M14*1.5*55	Bolt M14×1.5×55	1	
8	69135349	A20480-04009	Dust-proof seal d32×40×5/6.5	1	
9	69135344	A20480-04004	Snap ring Φ48×Φ32×3	1	
10	69135347	A20480-04007	Axial seal Φ32×Φ42×6	1	
11	69135350	A20480-04010	Bushing bearing 32×36×35	1	
12	69135351	A20480-04011	Guiding sleeve 70	1	
13	69002386	LS2386	O-ring 70×5.7	1	
14	69135341	A20480-04001	Piston rod	1	
15	69002382	LS2382	O-ring38×3.5	1	
16	69136202	M20385-2	Adjusting sleeve I	1	
17	69135348	A20480-04008	Orifice seal D70×60×6	1	
18	69135345	A20480-04005	Snap ring D70×Φ60×2.5	1	
19	69135343	A20480-04003	Orifice bearing ring D70×16×2.5	1	
20	69135352	A20480-04012	Piston	2	
21	69136827	GB91-86-5×40	Cotter pin 5×40	2	
22	69136828	GB/T9459-1988-M22×1.5	Nut M22×1.5δ22	1	
23	69136161	Max020-06-2	Cylinder cap	1	

图88/Fig88. 倾斜油缸/TILT CYLINDER

FD20/25(T)、FG(L)20-25(T)

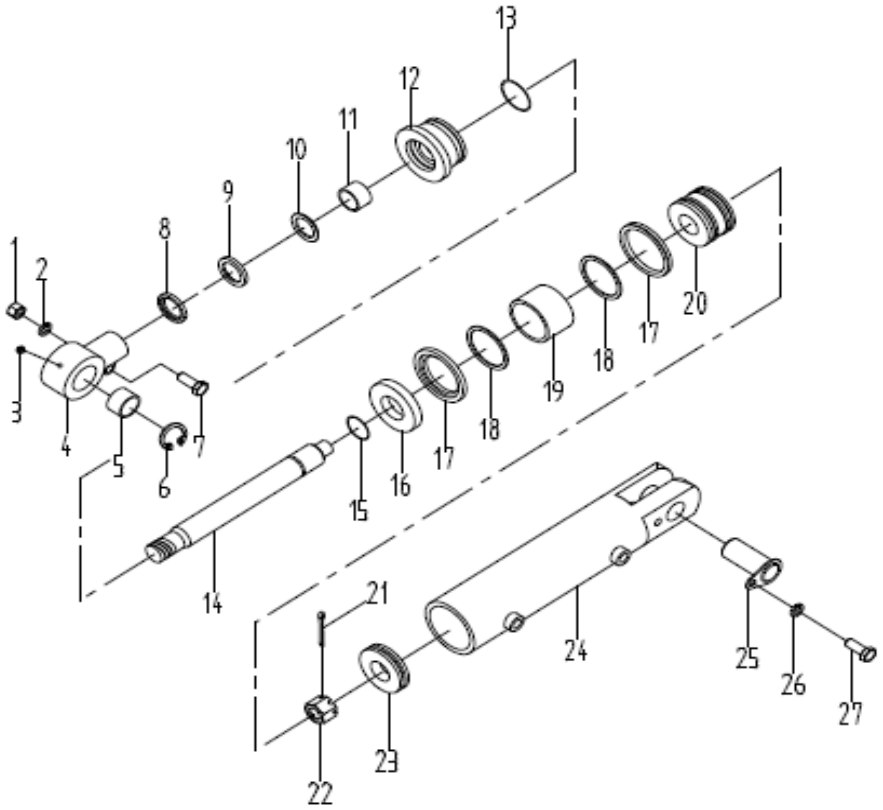

序号 Item No.	ID No.	代号 Part No.	名称 Description	数量 Q' ty	备注 Remark
24	69135385	A20480-07001	Cylinder body	1	
-	69135342	A20480-04002	Cylinder body	1	
25	69034184	A30480-09000	Bolt M10×20	2	
26	69000053	GB/T93-10	Washer 10	2	
27	69000123	GB/T5783-M10*20-8.8J	Pin shaft	2	

图88/Fig88.	倾斜油缸/TILT CYLINDER

FD20/25(T)、FG(L)20-25(T)

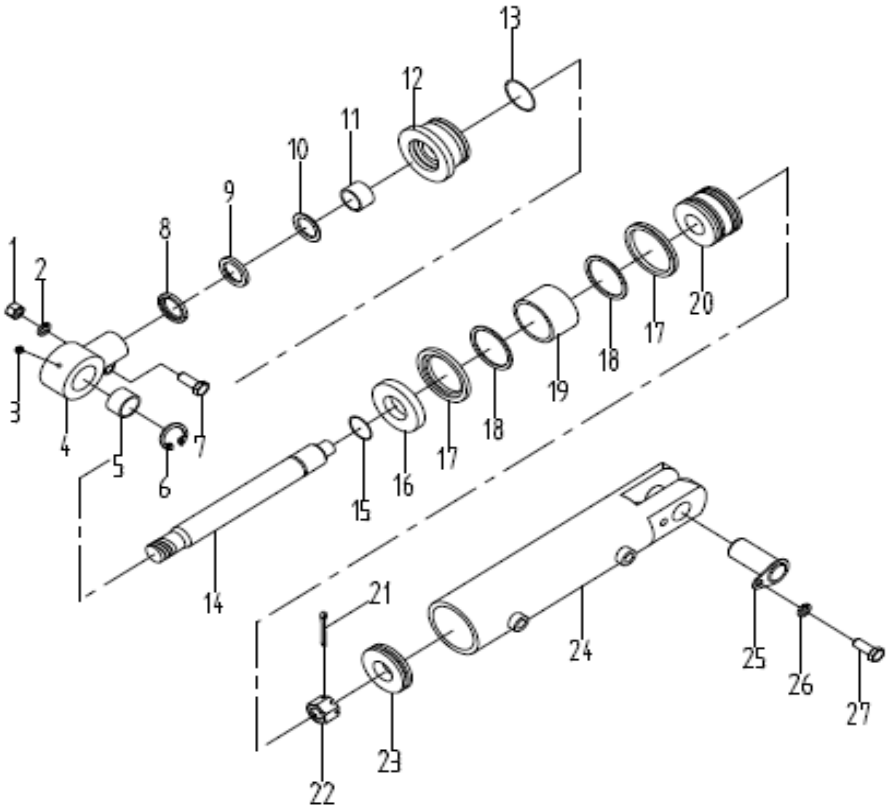

2-2.5t倾斜油缸选用表 TILT CYLINDER OPTION TABLE

前/后倾角 Tilt angle	ID No.	倾斜缸右 Tilt cylinder R.H.	ID No.	起升高度 LIFTING HEIGHT
6°/12°	69039619	A20480-04000A-6-12°	69104087	h<3.7m
6°/6°	69039636	A20480-04000A-6-6°	69104088	3.7m≤h<5m
3°/6°	69039637	A20480-04000A-3-6°	69104090	h≥5m

图89/Fig89. 倾斜油缸/TILT CYLINDER

FD30/35(T) 、FG(L)30-35(T)

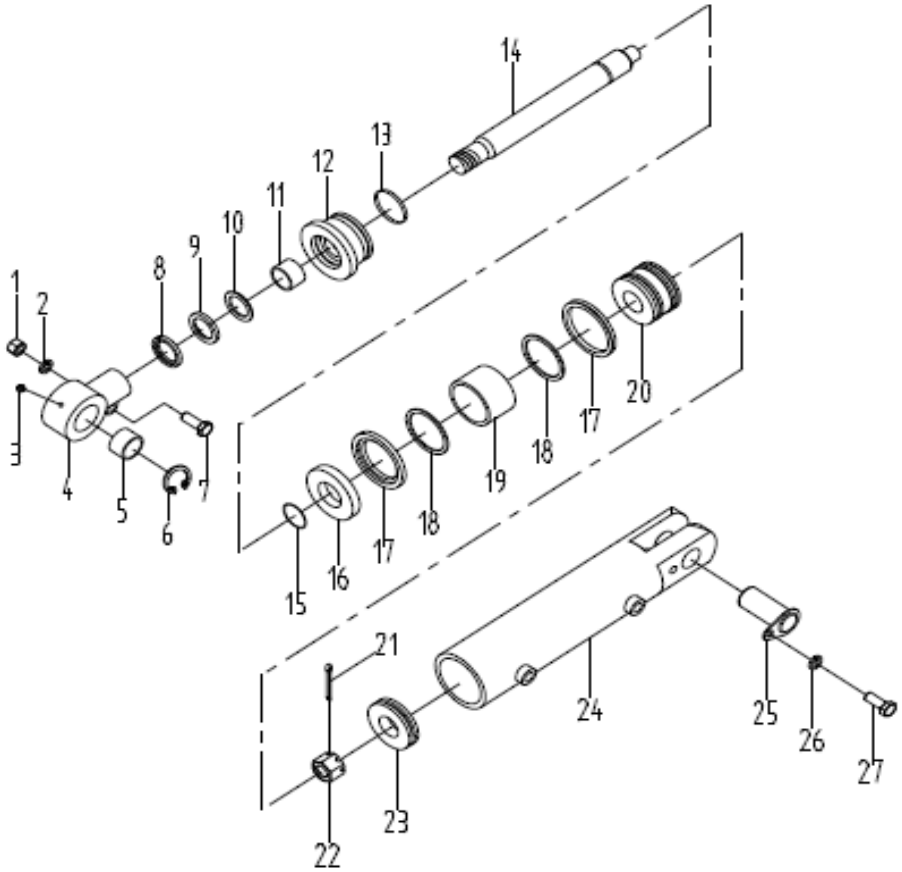

序号 Item No.	ID No.	代号 Part No.	名称 Description	数量 Q' ty	备注 Remark
A	N/A	A30480-05000	Tilt cylinder (right)	1	
B	N/A	A30480-08000	Tilt cylinder (left)	1	
1	69000316	GB/T6171-M14*1.5-8J	Nut M14×1.5δ13	1	
2	69005111	GB/T93-14	Washer 14	1	
3	69003941	JB/T7940.1-M10*1	Nipple M10×1	1	
4	69135414	A30480-05005	Connect ring	1	
5	69063301	GB/T9163-2001	Knuckle bearing GE30ES	1	
6	69059825	GB/T893.1-Φ47	Orifice circlip 47	1	
7	69136826	GB/T5786-M14*1.5*55	Bolt M14×1.5×55	1	
8	69135421	A30480-05012	Dust-proof seal d35×43×5/6.5	1	
9	69135416	A30480-05007	Snap ring φ45×φ35×3	1	
10	69135419	A30480-05010	Axial seal 35×45×6	1	
11	69135423	A30480-05014	Bushing bearing 35×39×35	1	
12	69135412	A30480-05003	Guiding sleeve 80	1	
13	69002387	LS2387	O-ring 80×5.7	1	
14	69135410	A30480-05001	Piston rod	1	
15	69002383	LS2383	O-ring 41×3.5	1	
16	69136457	Max030-06-2	Adjusting sleeve Ⅰ	1	
17	69135420	A30480-05011	Orifice seal D80×70×6	2	
18	69135417	A30480-05008	Snap ring φ80×φ70×2.5	2	
19	69135415	A30480-05006	Orifice bearing ring D80×16×2.5	1	
20	69135413	A30480-05004	Piston 80	1	
21	69007675	GB/T91-5*45	Cotter pin 5×45	1	
22	69094105	GB/T9459-1988	Nut M27×2δ27	1	
23	69136830	Max030-06-3	Adjusting sleeveⅡ	1	

图89/Fig89. 倾斜油缸/TILT CYLINDER

FD30/35(T) 、FG(L)30-35(T)

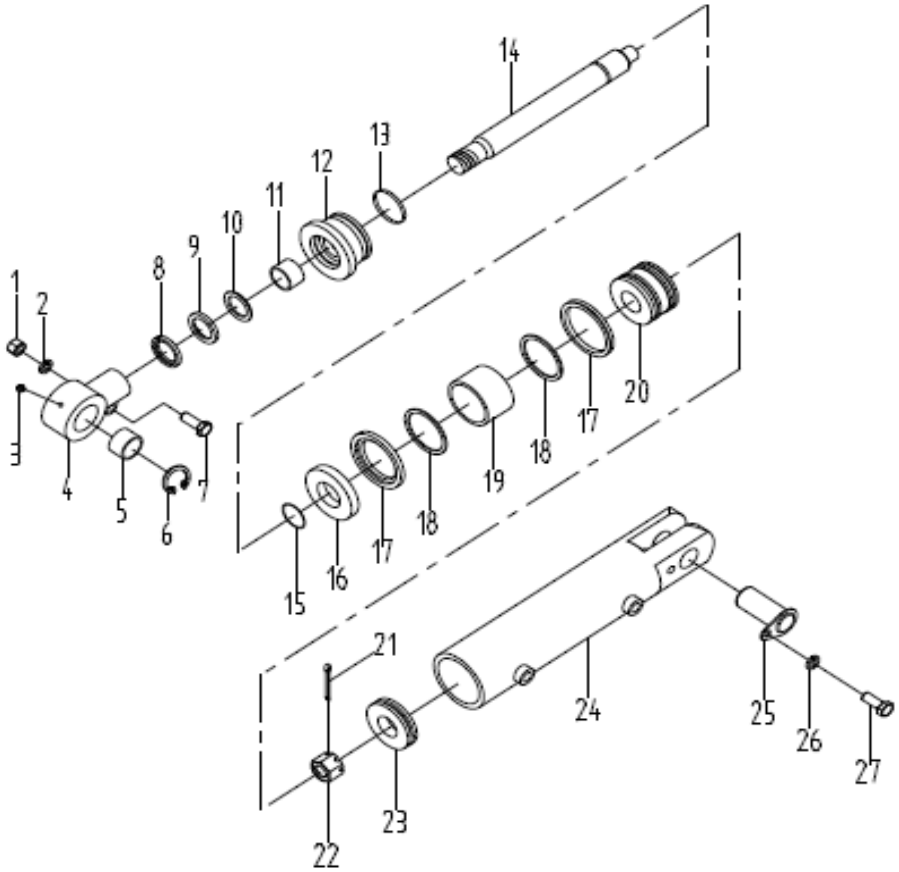

序号 Item No.	ID No.	代号 Part No.	名称 Description	数量 Q'ty	备注 Remark
24	69135456	A30480-08001	Cylinder body	1	
-	69135411	A30480-05002	Cylinder body	1	
25	69034184	A30480-09000	Pin shaft	2	
26	69000053	GB/T93-10	Washer 10	2	
27	69000123	GB/T5783-M10*20-8.8J	Bolt M10×20	2	

图89/Fig89.	倾斜油缸/TILT CYLINDER

FD30/35(T) 、FG(L)30-35(T)

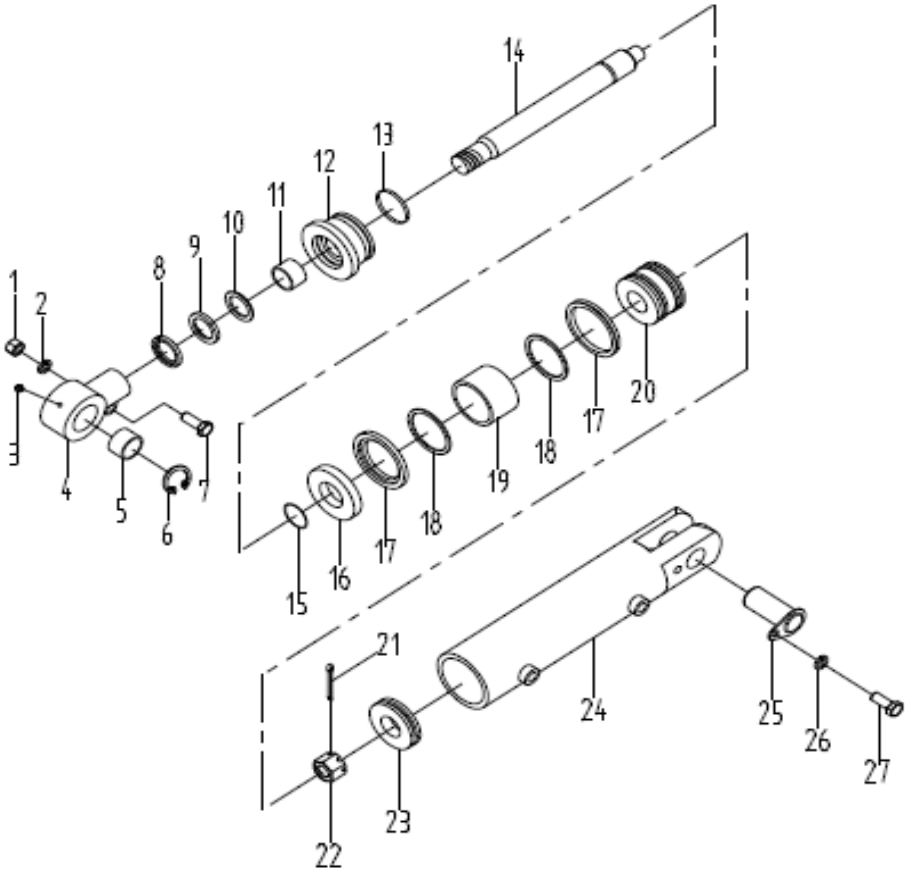

3-3.5t倾斜油缸选用表 TILT CYLINDER OPTION TABLE

前/后倾角 Tilt angle	ID No.	倾斜缸右 Tilt cylinder R.H.	ID No.	起升高度 LIFTING HEIGHT
6°/12°	69034153	A30480-05000A-6-12°	69104085	h<3.7m
6°/6°	69036363	A30480-05000A-6-6°	69104086	3.7m≤h<5m
3°/6°	69042516	A30480-05000A-3-6°	69104100	h≥5m

图90/Fig90. 标牌/DECAL

FD20/25/30/35T-AWE5、FD20/25/30/35T-AWV

FG(L)20/25/30/35T-AWA、FG(L)20/25/30/35T-AWG

FD20/25/30/35T-AG(1)

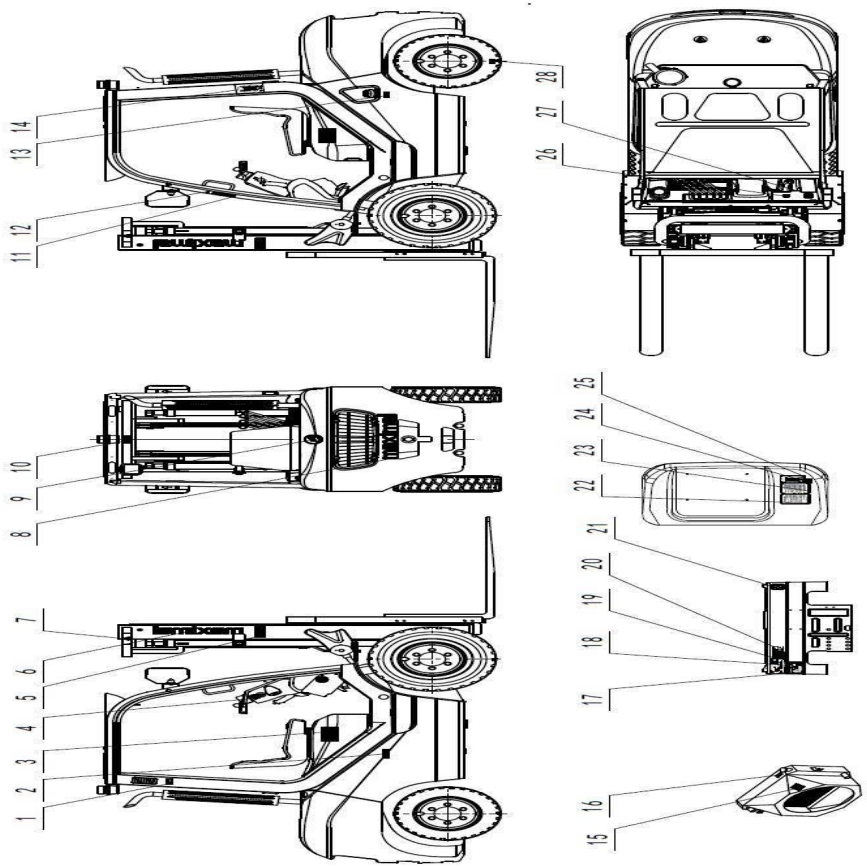

序号 Item No.	ID No.	代号 Part No.	名称 Description	数量 Q'ty	备注 Remark
A		-	Decal	1	
01		M3039100008	No flushing decal	1	国内用homeland
-		M30391W00001	No flushing decal	1	出口用go abroad
02	69136752	MJ30491-00001	Hydraulic oil decal	1	
03	69044907	LS44907	Model decal	2	2t
-	69044908	LS44908	Model decal	2	2.5t
-	69044906	LS44906	Model decal	2	3t
-	69044909	LS44909	Model decal	2	3.5t
04	69138782	M3039100003	Turning lights decal	1	
05	69136434	M3039100001	Safety decal	1	
06	69000725	M3039100002-1	Mast decal	2	
07	69136439	MJ30491-00004	Lifting decal（small）	2	
08	69009047	M3039100007-1	Counterweight decal	1	
09	69007659	M3039100006	Logo decal	1	
10	69000725	M3039100002-1	Mast decal	1	
11	69136442	MJ30491-00007	Anti-Tipping Over decal	1	
12	69136441	MJ30491-00006	Seatbelt decal	1	
13		MJ30491-00002	Fuel decal(diesel)	1	
-	69142150	MJ30491-00013	Fuel decal(LPG)	1	
-		MJ30491-00011	Fuel decal(gasoline)	1	
14		M3039100024	Lubrication chart decal	1	国内用homeland
-		M30391W0004	Lubrication chart decal	1	出口用go abroad

图90/Fig90. 标牌/DECAL

FD20/25/30/35T-AWE5、FD20/25/30/35T-AWV

FG(L)20/25/30/35T-AWA、FG(L)20/25/30/35T-AWG

序号 Item No.		代号 Part No.	名称 Description	数量 Q'ty	备注 Remark

FD20/25/30/35T-AG(1)

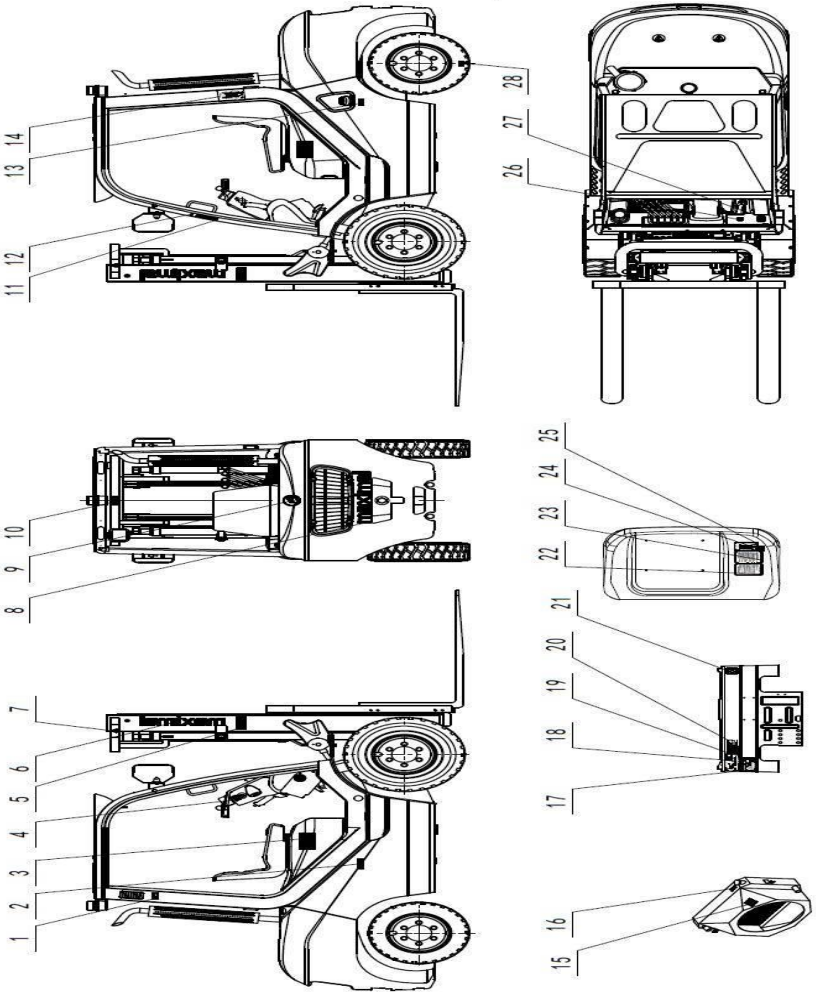

图90/Fig90. 标牌/DECAL

FD20/25/30/35T-AWE5、FD20/25/30/35T-AWV

FG(L)20/25/30/35T-AWA、FG(L)20/25/30/35T-AWG

FD20/25/30/35T-AG(1)

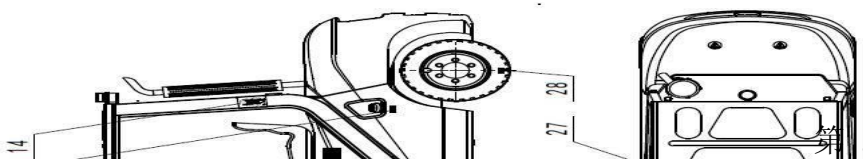

15	69136740	MJ30491-00008	Fan caution decal	1	
16	69089828	M3039100031	Anti-freeze added decal	1	国内用homeland
-	69089359	M3039100035	Please add antifreeze(below	1	国内用homeland
-		M30391W00032	Anti-freeze added decal	1	出口用go abroad
17	69136744	MJ30491-00009	Environmental information decal	1	国内用homeland
18	69020150	M30391W00027	Name plate decal	1	
-	69089358	M3039100020	Name plate decal	1	国内用homeland
-	69089234	M30391W00015	Name plate decal	1	出口用go abroad
19	69142366	M30391W00002	Noise decal	1	国内用homeland
-		M30391W00107	Noise decal	1	出口用go abroad
20	69136436	M3039100013	Standing forbidden decal	1	
21		M30391W00016	CE decal	1	CE国家用Used in CE countries
22		M3039100027	Operation instruction decal	1	国内用homeland
-		M30391W00007	Operation instruction decal	1	出口用go abroad
23		M3039100028	Operation rules decal	1	国内用homeland
-		M30391W00008	Operation rules decal	1	出口用go abroad
24	69136747	MJ30491-00010	Forbid hitching people decal	1	
25	69085922	M2539100001-1	Load chart decal	1	2.5t国内用homeland
-	69085921	M25391W00001-1	Load chart decal	1	2.5t出口用go abroad
-	69085925	M3039100011-1	Load chart decal	1	3t国内用homeland
-	69085923	M30391W00014-1	Load chart decal	1	3t出口用go abroad
-	69085930	M3539100001-1	Load chart decal	1	3.5t国内用homeland
-	69085929	M35391W00001-1	Load chart decal	1	3.5t出口用go abroad
26	69136742	A30491-00004	Brake decal	1	
27	69136741	MJ30491-00003	Brake oil decal	1	
序号 Item No.		代号 Part No.	名称 Description	数量 Q'ty	备注 Remark
28	69136438	M3039100029	Tire Safety decal	2	
29	69141405	MJ30491-00015	LEG caution decal	2	
	69142149	MJ30491-00012	LEG caution decal	2	

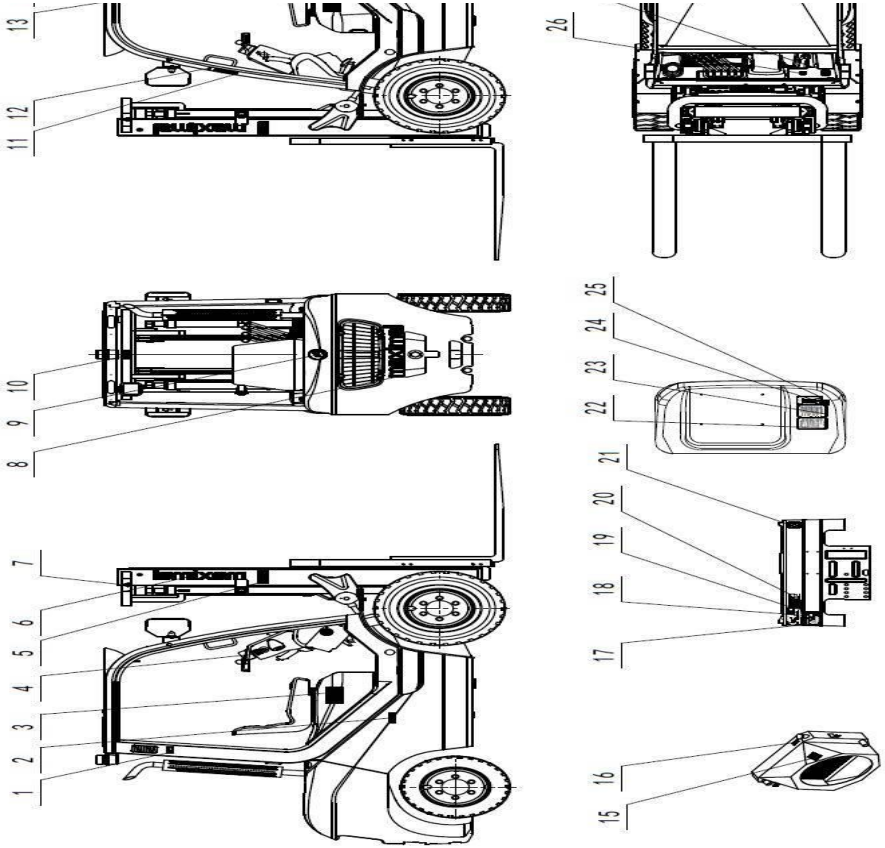
1
2
3
4
5
6
7
8
9
10
11
12
13
15
16
17
18
19
20
21
22
23
24
25
26